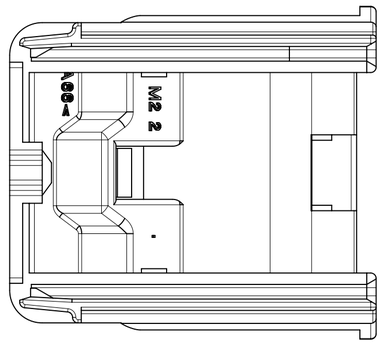

NOTES:

1- MATERIAL: PA 6.6 BLACK heat stabilized.
2- DELIVERED PRODUCT WEIGHT: 3.6g
3- RELATED COUNTERPART FEMALE CONNECTORS (32 WAYS, 22 WAYS).
4- ALL DIMENSIONS ARE TAKE OVER FROM THE 3D MODEL.

MARKINGS:

1 Supplier identification.

3 Date: MONTH/YEAR.
4 Material.
5 Mould identification M1 or M2.
6 Print identification (number).
7 Revision level

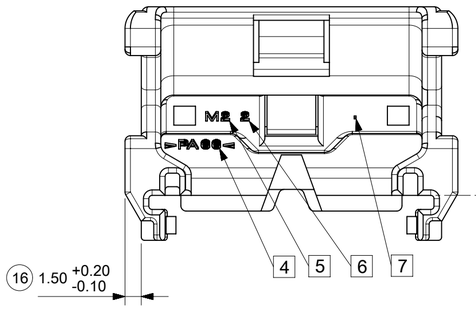

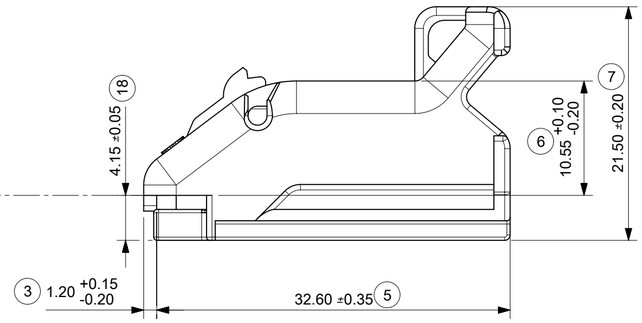

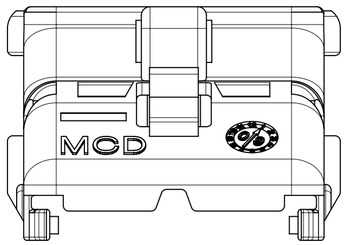

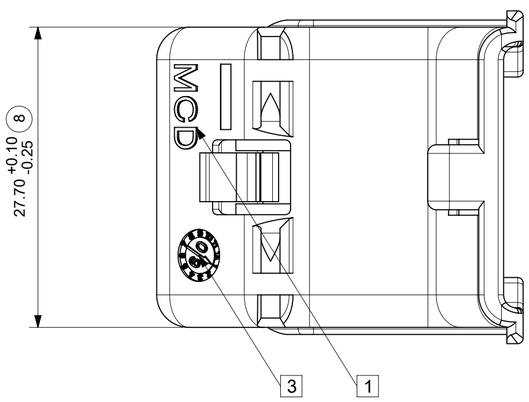

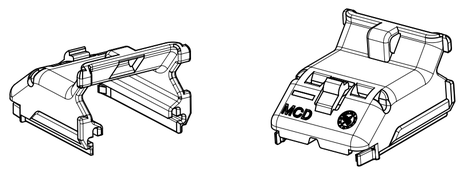

1:1

THIS DRAWING CONTAINS INFORMATION THAT IS PROPRIETARY TO MOLEX ELECTRONIC TECHNOLOGIES, LLC AND SHOULD NOT BE USED WITHOUT WRITTEN PERMISSION

DIMENSION UNITS	SCALE
mm	2.5:1

GENERAL TOLERANCES (UNLESS SPECIFIED)

ANGULAR TOL	±	0.0 °
4 PLACES	±	0.0
3 PLACES	±	0.0
2 PLACES	±	0.0
1 PLACE	±	0.0
0 PLACES	±	0.0

DRAFT WHERE APPLICABLE MUST REMAIN WITHIN DIMENSIONS

CURRENT REV DESC: NX RE-MASTERING

EC NO: 116806
DRWN: SSUVARNA 2018/03/13
CHK'D: SLAFAURE 2018/06/06
APPR: SLAFAURE 2018/06/14

INITIAL REVISION:
DRWN: PGRANDCL 2013/04/15
APPR: CBOUCHAN 2014/02/03

molex

CMC WIRE CAP 32, 22 WAY
MAT SEAL VERSION

PRODUCT CUSTOMER DRAWING

DOCUMENT NUMBER	DOC TYPE	DOC PART	REVISION
SD-64319-002	PSD	001	D1

FIRST ANGLE PROJECTION	DRAWING	SERIES	MATERIAL NUMBER	CUSTOMER	SHEET NUMBER
	A2-SIZE	64319	643191201	GENERAL MARKET	1 OF 1

DOCUMENT STATUS	P1	RELEASE DATE	2018/06/14 12:23:30

FORMAT: master-tb-prod-A2
REVISION: H
DATE: 20150116