Data Sheet



SCP1000 SERIES (120 kPa) ABSOLUTE PRESSURE SENSOR

Features

- 30 kPa - 120 kPa measuring range
- Single +2.4 … 3.3 V supply
- Four measuring modes plus power down mode
- On-chip temperature measurement
- Fully calibrated and compensated component
- Standard digital output: SPI or I^2C (1
- Small package size with optional (2 sealing gasket. Diameter 6.1 mm, height 1.7 mm
- Proof pressure 2.0 MPa
- Pb-free solderable component & RoHS-compatible

Applications

- Barometric pressure measurement and altimeter applications
- Home weather stations
- Advanced medical applications
- Level gauging

Benefits

- 1.5 Pa (~10cm at sea level) resolution with < 10 μA current consumption
- Altimeter/barometer function can be realized with minimum use of MCU
- Chemically and mechanically robust package

Ordering Information

Product	Description
SCP1000-D01	30 kPa - 120 kPa, SPI interface
SCP1000-D11	30 kPa - 120 kPa, I^2C interface

Absolute Maximum Ratings

Parameter	Value	Unit
Supply voltage (Vdd)	-0.3 to +3.6	V
Voltage at input / output pins (3	-0.3 to (Vdd + 0.3)	V
ESD (Human Body Model)	±2.0	kV
ESD (Charged Device Mode)	±0.5	kV
Storage temperature	-30 ... +85	°C
Proof pressure	2.0	MPa

Note 1) I^2C compatible TWI (Two Wire Interface)
Note 2) VTI's I-seal gasket
Note 3) Referred to DVDD

Electrical Characteristics

Vdd = 2.7 V and ambient temperature unless otherwise specified

Parameter	Condition	Min.	Typ	Max.	Units
Supply voltage Vdd		2.4		3.3	V
Current Consumption	High resolution mode		25		µA
	High speed mode		25		µA
	Ultra low power mode		3.5		µA
	Power down		200	500	nA
Output Load	@ 500 kHz			50	pF
Digital Pins Input Capacitance				1.6	pF
SPI Clock Frequency				500	kHz
I^2C Clock Frequency				400	kHz
Data Transfer Time	@ 500 kHz		120		µs

Performance Characteristics[4]

Parameter	Condition	Min.	Typ	Max.	Units
Operating Pressure Range	Nominal	30		120	kPa
Operating Temperature		-20		+70	°C
Resolution [5	High resolution mode		1.5	3	Pa
	High speed mode		3	6	Pa
Relative Pressure Accuracy [5	600 hPa...1200 hPa +10 °C ... +40 °C	-50		+50	Pa
Absolute Pressure Accuracy [5	600 hPa...1200 hPa +10 °C ... +40 °C	-150		+150	Pa
Absolute Pressure Accuracy [5	300 hPa...1200 hPa -20 °C ... +70 °C	-200		+400	Pa
Long-term Stability	12 months		+100		Pa
Digital pressure output data word length				19	bits
Digital temperature output data word length				14	bits
Pressure Data Output Refresh Rate	High resolution mode		1.8		Hz
	High speed mode		9		Hz
Temp. Resolution			0.2	0.5	°C
Temp. Accuracy		-2	±1	+2	°C

Note 4 Soldered components. Detailed information about the effect of soldering and mounting can be found in SCP1000 Pressure Sensor Assembly Instructions (Technical Note 51)
Note 5 Typical = Median, Min. /Max. = 95% of the components within the population

Interface Options

Communication interface is pre-programmed in the factory and it can be either SPI (Serial Peripheral Interface) or I^2C (Inter-Integrated Circuit). The SPI interface is a full duplex 4 wire interface and the connection between the MCU and SCP1000 is achieved using MOSI, MISO, SCK and CSB. The I^2C interface is slave-only half duplex two-wire interface available on SDA and SCL pins.

Interface Options

The SCP1000 Pressure sensor has 4 normal operation modes plus power down mode.

Mode	Pressure measurement	Resolution	Output data refresh rate
High resolution	Continues	17 bits	1.8 Hz
High speed	Continues	15 bits	9 Hz
Ultra low power	Periodical	15 bits	Approximately 1 Hz
Low power	External trigger	17 bits or 15 bits	
Power Down	Activated through PD pin		

Electrical Connections

The SCP1000 pressure sensor supports two communication interfaces, SPI and I^2C. Appropriate communication interface is pre-programmed in the factory.

SCP1000- D01 (SPI Interface)

Pin #	Name	Function	Characteristics
1	ATST	Connect to analog ground	For factory use only
2	TRIG(6	Trigger input, connect to GND if not used	Digital input
3	DRDY	Interrupt signal (data ready)	Digital output
4	CLK	Connect to digital GND	
5	DVDD	Digital supply voltage	Power line
6	DVSS	Digital ground	Power line
7	DVDDS	Digital supply filter	Digital power supply filter
8	PD(6	Power down, connect to GND if not used	Input to force the chip in power down mode
9	SCK(6	SPI clock input	Interface clock
10	MOSI(6	SPI data input	Digital data input
11	MISO(6	SPI data output	Digital data output
12	CSB(6	SPI chip select	Digital input
13	AVDD	Analog supply voltage	Power line
14	AVSS	Analog ground	Power line
15	AVSS	Analog ground	Power line
16	ATST	Connect to analog ground	For factory use only

Note 6 The MCU has to actively drive the signal in high and low states

SCP1000- D11 (I^2C Interface)

Pin #	Name	Function	Characteristics
1	ATST	Connect to analog ground	For factory use only
2	TRIG(6	Trigger input, connect to GND if not used	Digital input
3	DRDY	Interrupt signal (data ready)	Digital output
4	CLK	Connect to digital GND	
5	DVDD	Digital supply voltage	Power line
6	DVSS	Digital ground	Power line
7	DVDDS	Digital supply filter	Digital power supply filter
8	PD(6	Power down, connect to GND if not used	Input to force the chip in power down mode
9	SCL(6	I^2C serial clock	Interface clock
10	SDA(6	I^2C data	I2C data input/output
11	MISO	n/c	n/c
12	CSB	Connect to analog supply voltage	
13	AVDD	Analog supply voltage	Power line
14	AVSS	Analog ground	Power line
15	AVSS	Analog ground	Power line
16	ATST	Connect to analog ground	For factory use only

Note 6 The MCU has to actively drive the signal in high and low states

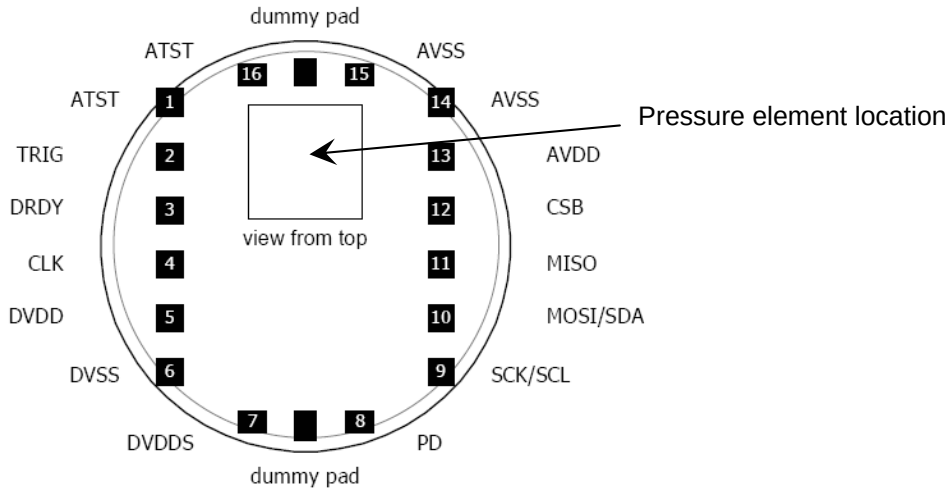

Figure 1 Pin arrangement of SCP1000

Note: In order to ensure the contact reliability, both pins in the pin pairs 1,16 and 14,15 (which are internally connected together) should be soldered.

PWB Pad Layout

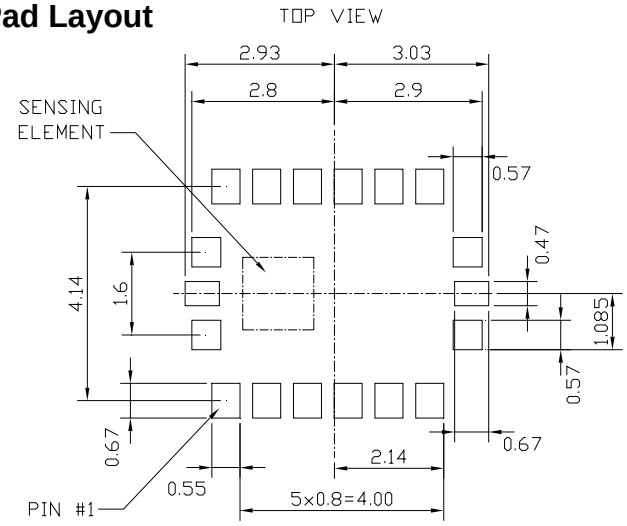

Dimensions

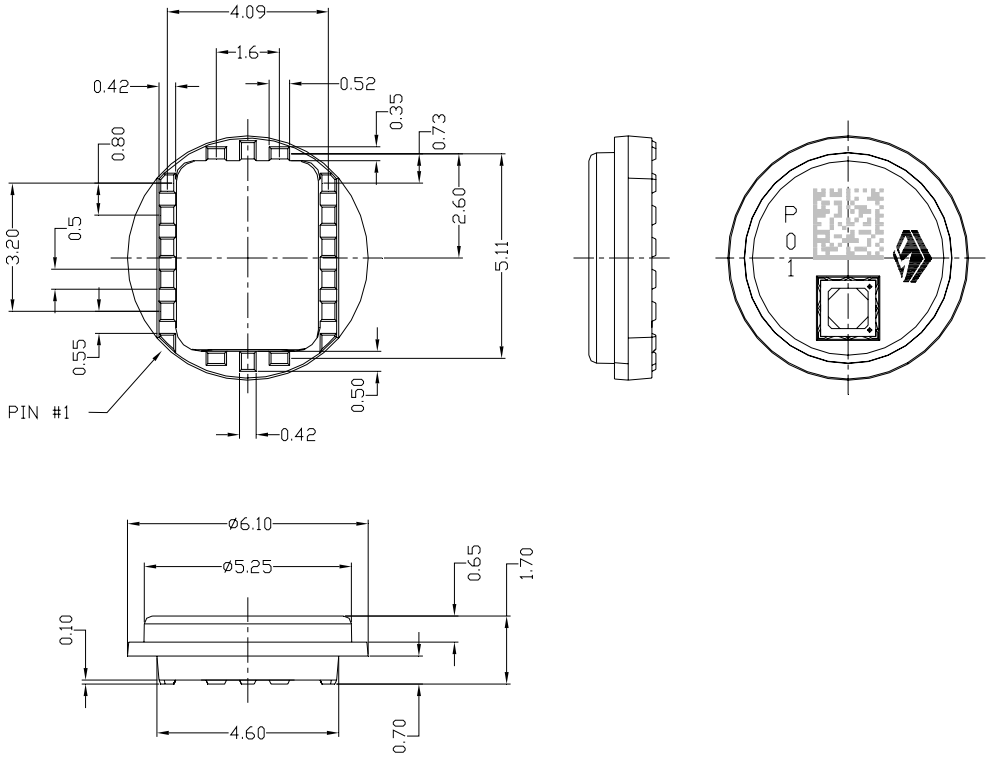

Typical Performance characteristics

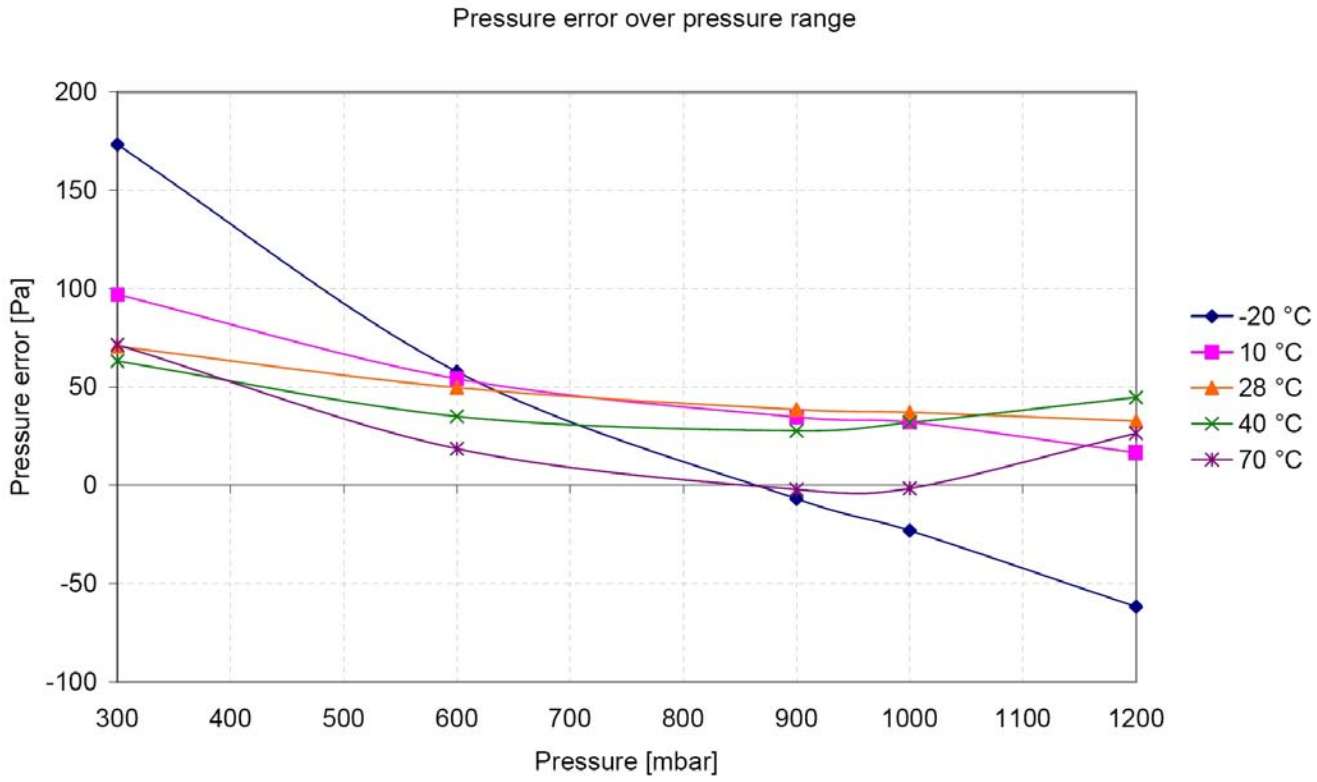

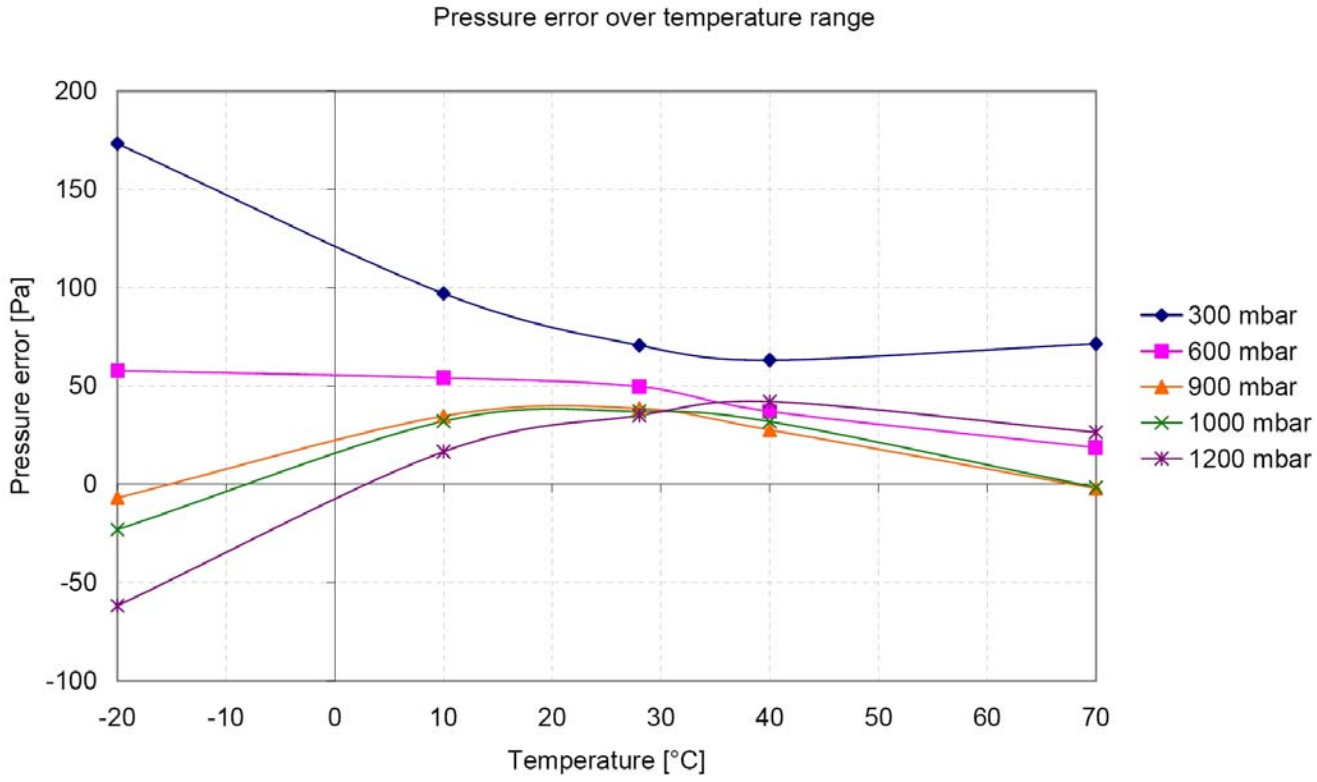

Resolution distribution in high resolution measurement mode [Pa], N=534

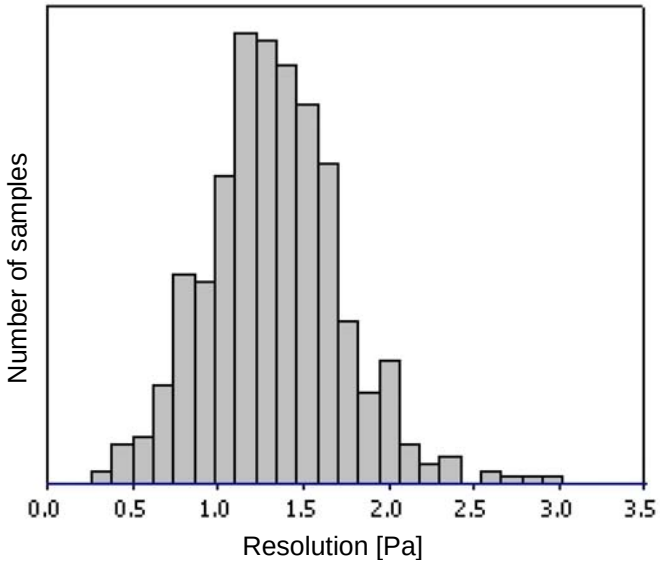

Pressure error over supply voltage range

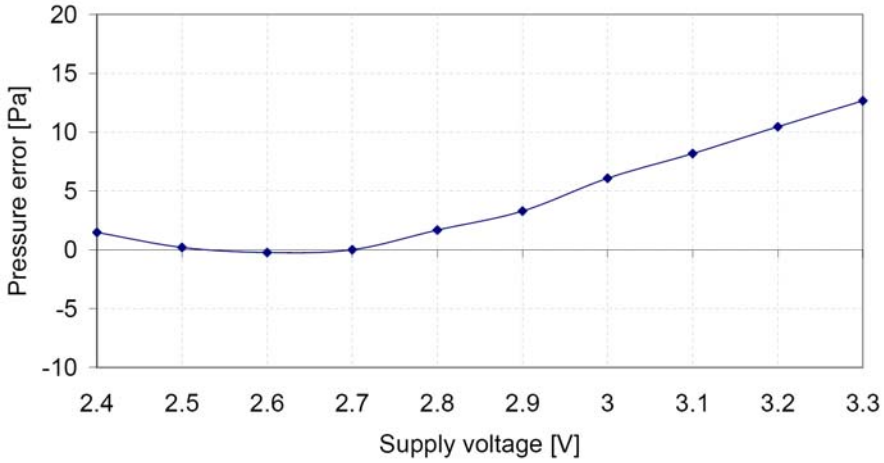

Temperature error over supply voltage range

