SCMM1206S1 Series, Current Sensor Resistor (Lead / Halogen Free)

Features / Applications :

- High power rating is up to 1W
- Welding construction; excellent long-term stability
- Industrial applications & Current Sensor Resistor
- RoHS compliant

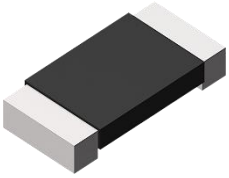

Electrical Specifications :

Characteristics[1]	Feature
Power Rating[2]	1 W
Resistance Value	1.0 to 10 mΩ
Temperature Coefficient of Resistance (25/125℃)	±75 ppm/℃
Operation Temperature Range	-65℃~ +170℃
Resistance Tolerance	± 1%
Maximum Working Voltage (V)	$(P*R)^{1/2}$

1. For detail information refer to the table on page 3 P/N list
2. For resistors are operated at terminal temperature in excess of 70℃, the maximum load shall be derated in accordance with the following curve.

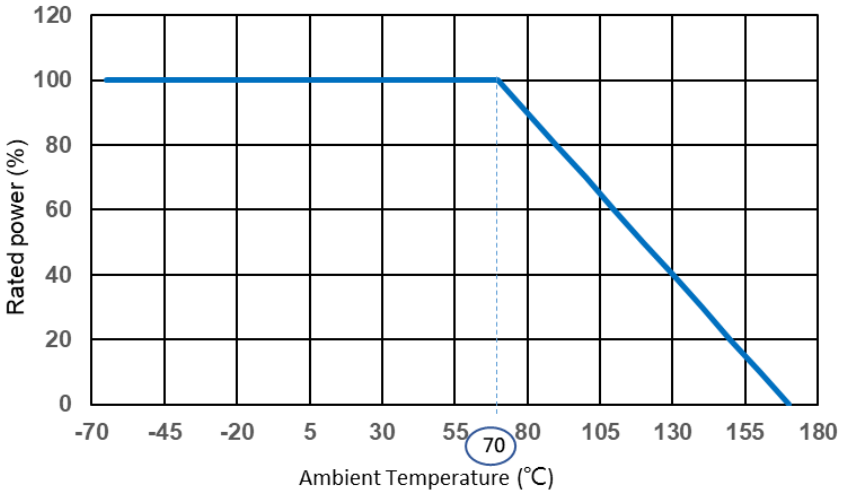

Figure 1. : Power derating curve at ambient temperature

Outline Drawing :

Construction and Dimension

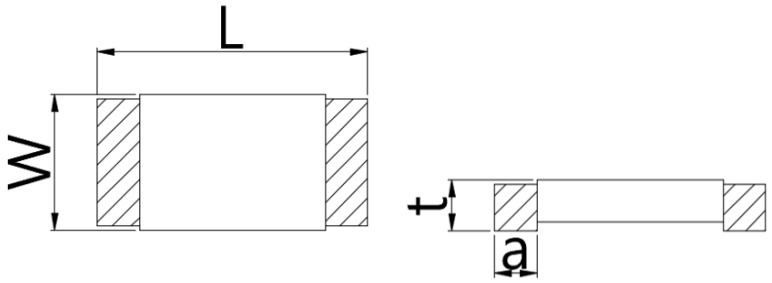

Dimensions (mm)				
Resistance Range (mΩ)	1	1.5	2, 3, 4, 5	6, 7, 8, 9, 10
L	3.20 ± 0.25			
W	1.60 ± 0.25			
t	0.6 ± 0.25			
a	1.0 ± 0.25	0.7 ± 0.25	0.65 ± 0.25	0.5 ± 0.25

Recommended PCB Pin Hole Dimensions

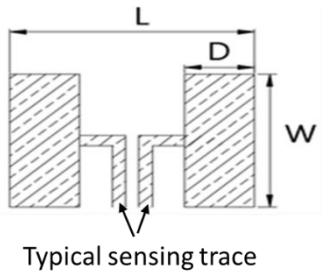

Resistance Range	Dimensions		
mΩ	W (mm)	D (mm)	L (mm)
1.0 to 10	1.8	1.6	4.0

Type Designation :

S C M M	1206	S	1	—	□□□□	□
(1)	(2)	(3)	(4)		(5)	(6)

Note :

(1) Series No.

(2) Size

(3) Terminal Type : S = Short terminal

(4) Power Rating : 1 = 1W

(5) Resistance value : R003 = 0.003Ω, R010 = 0.01Ω

(6) Tolerance : F = ±1%, G = ±2%, J = ±5%

P/N list :

P/N	R value	TCR	Power Rating	Tolerance		
	(mΩ)	(ppm/K)	(W)	1%	2%	5%
SCMM1206S1-R001*	1.0	±75	1	✓		
SCMM1206S1-1M50*	1.5	±75	1	✓		
SCMM1206S1-R002*	2.0	±75	1	✓		
SCMM1206S1-R003*	3.0	±75	1	✓		
SCMM1206S1-R004*	4.0	±75	1	✓		
SCMM1206S1-R005*	5.0	±75	1	✓		
SCMM1206S1-R006*	6.0	±75	1	✓		
SCMM1206S1-R007*	7.0	±75	1	✓		
SCMM1206S1-R008*	8.0	±75	1	✓		
SCMM1206S1-R009*	9.0	±75	1	✓		
SCMM1206S1-R010*	10.0	±75	1	✓		

* Note : Other values and tolerance would be available, please contact Cyntec.

Characteristics :

Electrical

Item	Specification and Requirement	Test Method
Temperature Coefficient (TCR)	As follow specification	JIS-C-5201 +25℃/ +125℃.
Short Time Overload	ΔR: ± 0.5% Without damage by flashover, spark, arcing, burning or breakdown	JIS-C-5201-1 4.13 2.5 x rated power for 5 seconds.
ESD	ΔR: ± 1% Without damage by flashover, spark, arcing, burning or breakdown	AEC-Q200-002 Human body, 8KV.
Insulation Resistance	Over 100 MΩ on Overcoat layer face up	JIS-C-5201-1 4.6 $100V_{DC}$ for 60 +10/-0 seconds
Voltage Proof	ΔR: ± 1% Without damage by flashover, spark, arcing, burning or breakdown	JIS-C-5201-1 4.7 $400V_{AC}$(rms.) for 60 +10/ -0 seconds

Mechanical

Item	Specification and Requirement	Test Method
Solderability	The surface of terminal immersed shall be minimum of 95% covered with a new coating of solder	J-STD-002 Method B category 3 245±5℃ for 5±0.5 seconds.
Resistance to Solder Heat	ΔR: ± 0.5% Without distinct damage in appearance	MIL-STD-202 Method 210 260 ± 5℃ for 10 ± 1 seconds.
Board Flex	ΔR: ± 1.0% Without mechanical damage such as break.	AEC-Q200-005 Bending value: 2 mm for 60 ± 1 seconds.
Vibration	ΔR: ± 0.5% Without distinct damage in appearance	MIL-STD-202 Method 204 5G's for 20 minutes, 12 cycles each of 3 orientations. Test from 10-2000Hz.

Mechanical Shock	ΔR: ± 0.5% Without distinct damage in appearance	MIL-STD-202 Method 213 100G's peak value, 6ms, Half-sine waveform, 12.3ft/sec.
Terminal Strength (SMD)	ΔR: ± 1% Without mechanical damage such as break.	AEC-Q200-006 Force of 1.8Kg for 60 seconds.

Endurance

Item	Specification and Requirement	Test Method
Temperature Cycling	ΔR: ± 0.5% Without distinct damage in appearance	JESD22 Method JA-104 -55°C to 150°C /1000cycle 30 min maximum dwell time at each temperature.
Biased Humidity	ΔR: ± 0.5% Without distinct damage in appearance	MIL-STD-202 Method 103 1000 hours, 85℃/85%R.H, applied for 10% rated power.
Operational Life	ΔR: ± 1.0% Without distinct damage in appearance	MIL-STD-202 Method 108 70℃, 100% rated power 1.5 hours ON, 0.5 hours Off For total 1000 hours
High Temperature Storage	ΔR: ± 1.0% Without distinct damage in appearance	MIL-STD-202 Method 108 170°C for 1000 hours.
Moisture Resistance	ΔR: ± 0.5% Without distinct damage in appearance	MIL-STD-202 Method 106 65°C /90-100%RH, unpowered, 7b not required

Note : Measurement at 24±4 hours after test conclusion for all reliability tests-parts.

PACKAGING DESCRIPTIONS :

Dimensions :

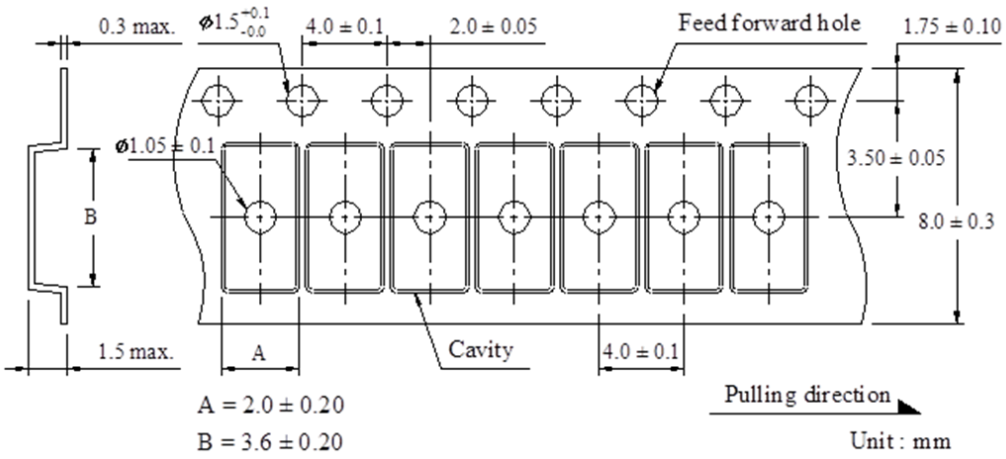

Reel Dimensions :

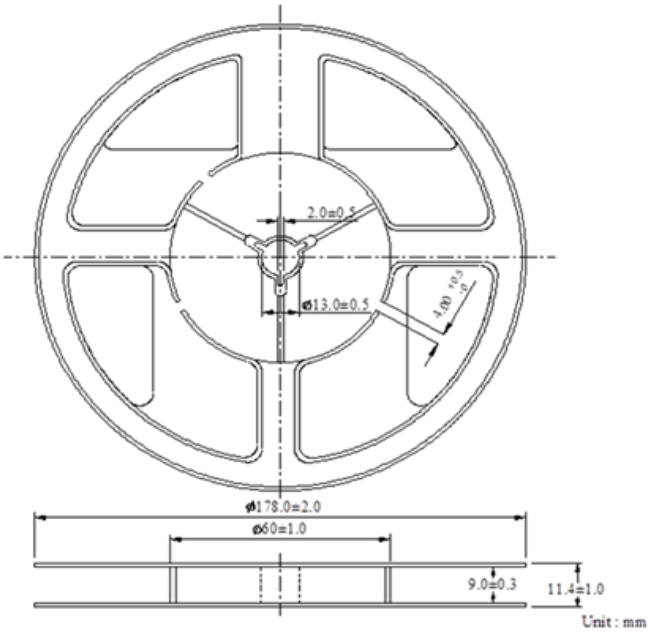

Peel Strength of Top Cover Tape :

The peel speed shall be about 300mm/min and the peel force of top cover tape shall between 0.1 to 0.7N

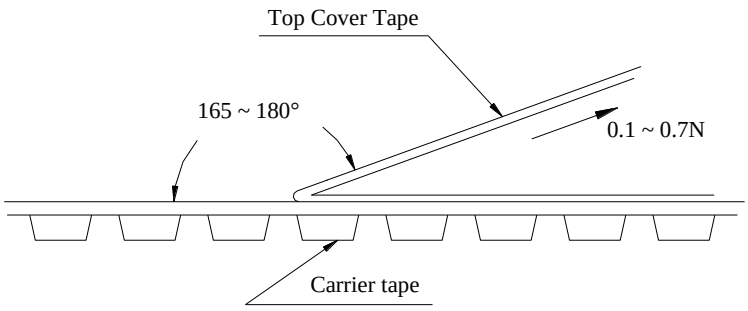

Number of Taping :

4,000 pieces / reel

Label Marking :

The following items shall be marked on tray

(1) Description

(2) Quantity

(3) Part No.

(4) Tapping No.

Care Note :

Care note for storage

(1) Chip resistor shall be stored in a room where temperature and humidity must be controlled.

(temperature 5 to 35℃, humidity < 60% RH) However, a humidity keep it low, as it is possible.

(3) Chip resistor shall be stored as direct sunshine doesn't hit on it.

(4) Chip resistor shall be stored with no moisture, dust, a material that will make solderability inferior, and a harmful gas (Chloridation hydrogen, sulfurous acid gas, and sulfuration hydrogen)

Care note for operating and handling

(1) Protect the edge and coating of the sensors from mechanical stress.

(2) Avoid bending of printing circuit board (PCB) when cutting and fixing it on support body to reduce mechanical stress on sensors.

(3) Sensor should be used within the condition of specification.
Note: When a voltage higher than specified value is loaded to the sensor, this may damage the sensor material due to temperature rise.

(4) The loaded voltage should consult terminal temperature of the sensor according to the derating curve.

(5) When applying a high current exceeding suggested specification (pulse current, shock current) to the sensor, it is necessary to re-evaluate the operating condition before using it in the system.

Reflow profile :

Recommended Reflow Profile

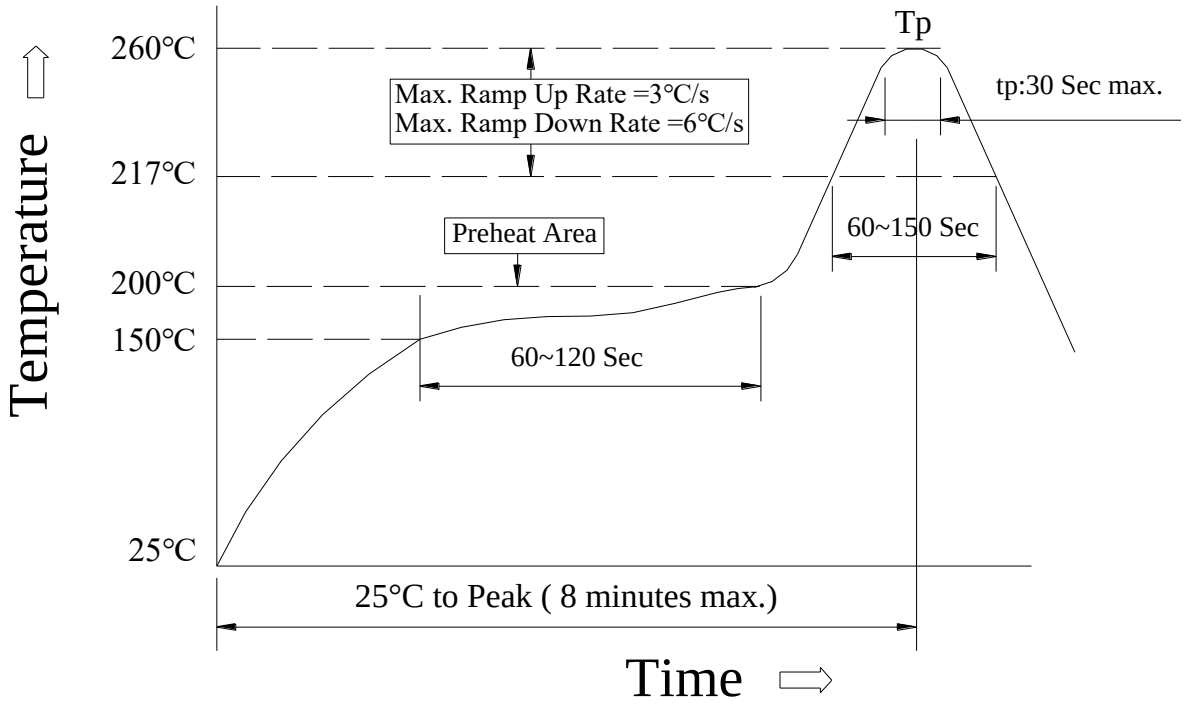

(1) Reflow Soldering Method :

Reflow Soldering	Tp:255~260℃	Max.30 seconds (tp)
	217℃	60~150 seconds
Pre-Heat	150 ~ 200℃	60~120 seconds
Time 25℃ to peak temperature	8 minutes max.	

Reference : JEDEC J-STD-020D