Mallory Sonalert Products,Inc.

Part #: **SCE028XD3DB2S**

Sales Outline Drawing

Revision: **A**

Specifications:

Sound Level Category:	Extra Loud	Loud	Extra Loud	Loud
Mode of Operation:	Continuous	Continuous	Medium Pulse	Medium Pulse
Pulse Rate (PPS):	N/A	N/A	5	5
Loudness @ 2 FT:	95 to 105 dB(A) Typ.	85 to 95 dB(A) Typ.	95 to 105 dB(A) Typ.	85 to 95 dB(A) Typ.
Frequency:	2900 ± 500 Hz	2900 ± 500 Hz	2900 ± 500 Hz	2900 ± 500 Hz
Connection:	TERMINALS ONLY	TERMINALS; BLUE WIRE TO (-)	TERMINALS; YELLOW WIRE TO (-)	TERMINALS; BOTH WIRES TO (-)
Voltage Rating:	16 to 28 VDC			
Current Draw:	40mA MAX			
Housing Material:	6/6 Nylon, Color: Black			
Storage Temperature:	-40° to +85° C			
Operating Temperature	-40° to +85° C			
Panel Mounting:	Recommended hole size is 1.25"(31.75mm). Thread front will fit standard 30mm(1.181") hole.			
Knurled Nut:	Used to attach part to panel. The max recommended torque is 10 in-lbs.			
Weight (Typical):	1.6 oz (45g)			
NEMA 3R,4X, & 12:	Approved with use of ACC03.			
cUL Recognition:	cUL Recognized			
Options:	Please contact factory.			

Dimensions: Inches (mm)

ROHS Compliant

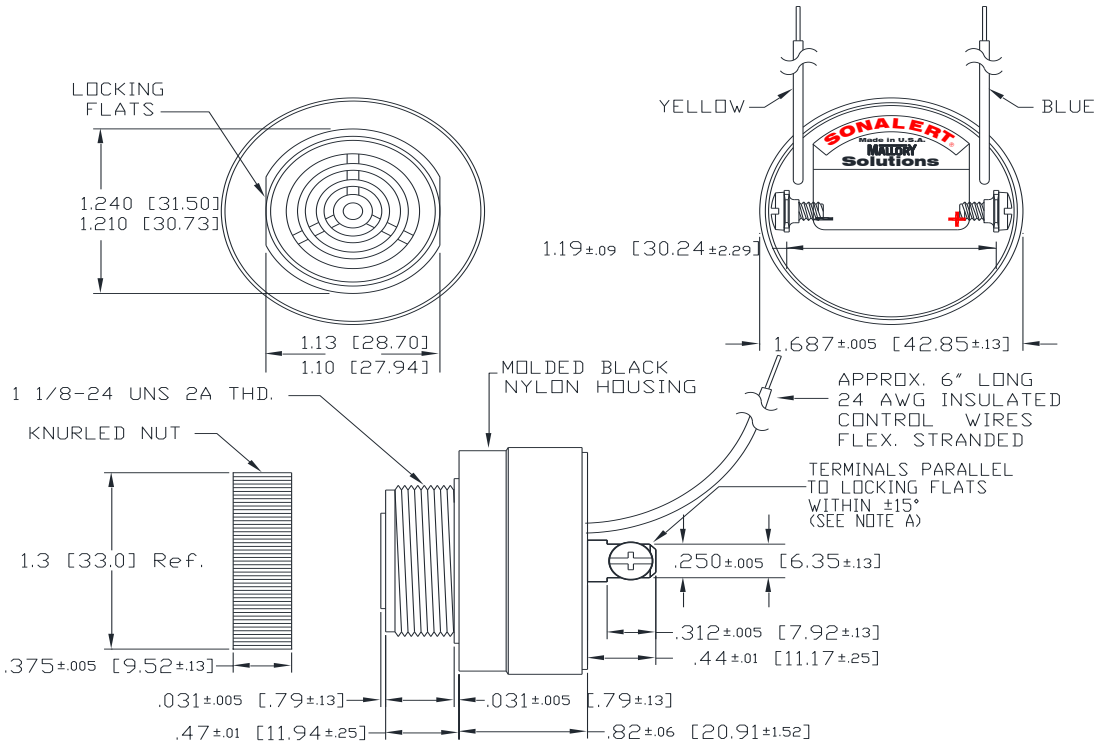

NOTE A: TERMINALS-.032 BRASS TIN PLATED, TAPPED FOR #6-32 SCREW. TWO #6-32 NICKEL PLATED BRASS SCREWS INCLUDED. WILL ACCEPT 1/4" QUICK CONNECT.

NOTE B: MOUNTING- REMOVE BLACK PLASTIC NUT AND INSERT THREADED FRONT THROUGH 1.25" HOLE PUNCHED IN PANEL, IF ORIENTATION IS NEEDED, NOTE LOCKING FLATS ON DRAWING. SCREW NUT BACK ON. DO NOT OVERTIGHTEN.

4411 South High School Road, Indianapolis, Indiana 46241 U.S.A · Phone: (317) 612-1000 Fax: (317) 612-1010 www.mspindy.com