Rev	AWO #	Description	Date	Appr
-		RELEASED	2/01/10	

APPROVED: _____

DATE: _____ TITLE: _____

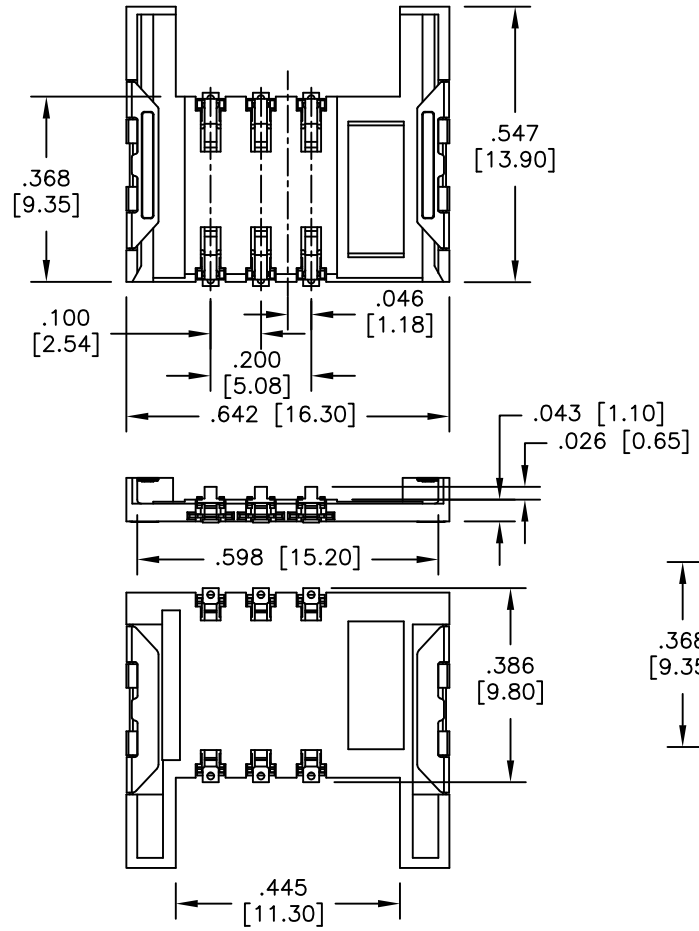

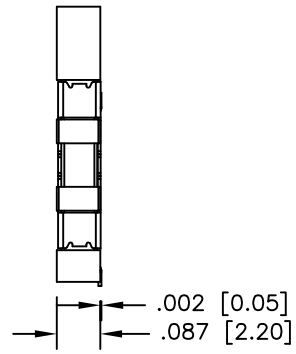

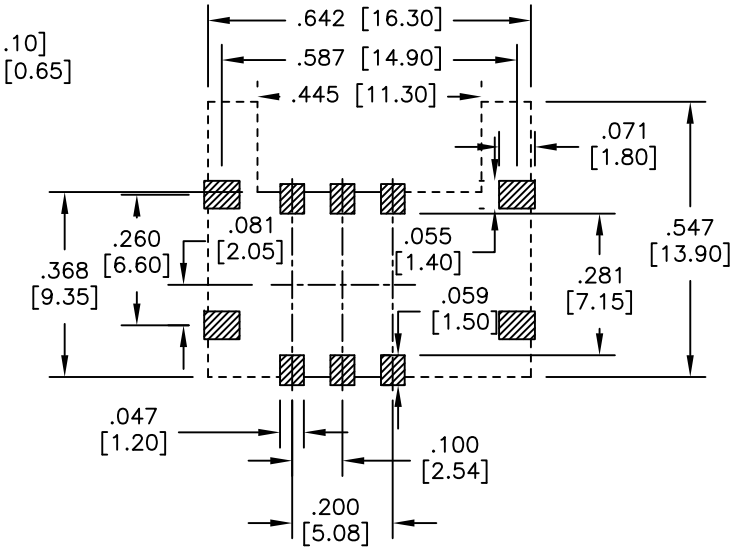

RECOMMENDED PCB LAYOUT

SPECIFICATIONS:

Material:
Insulator: Hi-temp thermoplastic , rated UL 94V-0
Insulator color: Black
Contacts: Copper Alloy
Lock: Stainless, Nickel plated

Plating:
Gold flash over Nickel underplate on contact area,
Tin over Copper underplate on SMT tails.

Electrical:
Current rating: 1.0 Amps max
Contact resistance: 30 mohms max.
Insulation resistance: 1000 Mohms min @ 500 VAC
Dielectric withstanding voltage: 500 VAC for 1 minute

Temperature Rating:
Operating temperature: -40°C to +85°C

Environmental:
Lead free, RoHS compliant.
Recommended soldering temp: 260°C for 5 sec.

RoHS COMPLIANT

UNLESS OTHERWISE SPECIFIED
ALL DIMENSIONS ARE INCHES [MM]
TOLERANCES: EXCEPT AS NOTED

INCHES		HOLES	
.X	± .10	Ø.X	±.10
.XX	± .020	Ø.XX	±.015
.XXX	± .015	Ø.XXX	±.010

APPROVALS		DATE
DRAWN	DY	2/01/10
CHECKED		
APPROVED		

ADAM TECH
909 Rahway Avenue, Union, NJ 07083
Phone: 908-687-5000 Fax: 908-687-5710

TITLE: SIM CARD CONNECTOR, 6 POSITION
.087" [2.20mm] HIGH, SURFACE MOUNT

SIZE	PART NO.	REV.
X	SCC-E-06-SG-SMT	-

REF: S00041C | SCALE: NTS | SHEET 1 OF 1