Data Sheet

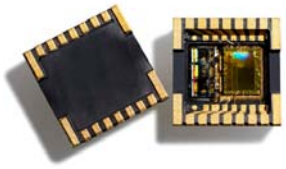

SCA3000-E05 3-AXIS ULTRA LOW POWER ACCELEROMETER WITH DIGITAL SPI INTERFACE

Features

- 2.35 V – 3.6 V supply voltage, 1.7 – 3.6 V digital I/O voltage
- ±18 g measurement range
- SPI digital interface
- Selectable frequency response
- Ultra low power consumption (2.5 V, 120 μA typ)
- 64 samples/axis buffer memory for output acceleration data and advanced features enable significant power and resource savings at system level
- Interrupt signal triggered by motion
- Size 7x7x1.8 mm
- Proven capacitive 3D-MEMS technology
- High shock durability
- RoHS compliant / lead free soldering

Applications

SCA3000-E05 is targeted to battery operated wrist and hand-held devices. Typical applications are but not limited

- Sports equipment

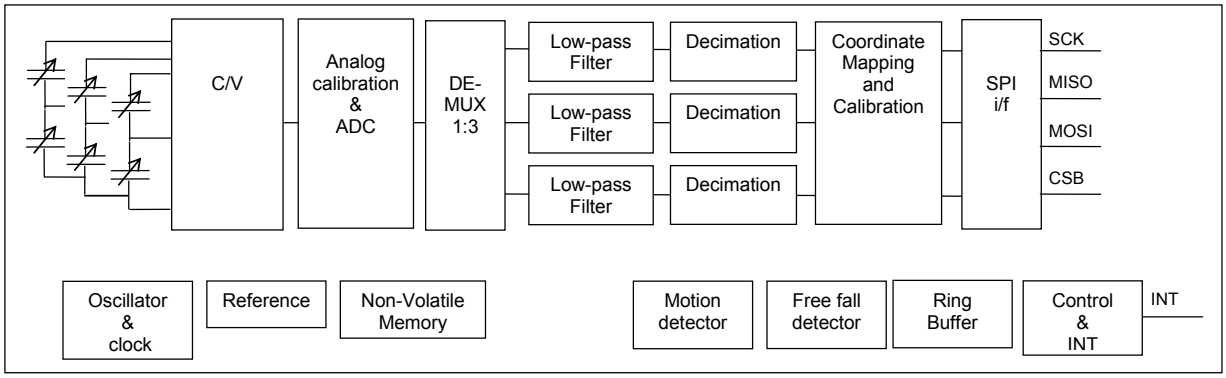

Figure 1 SCA3000-E05 Block Diagram

Performance Characteristics [1)]

Parameter	Condition	Typical supply range 2.35 – 2.7 V			Extended supply range 2.7 – 3.6 V			Units
		Min	Typ [2)]	Max	Min	Typ [2)]	Max	
Analog and digital Vdd		2.35	2.5	2.7	-	3.3	-	V
Digital I/O Vdd	Vdd ≥ Digital I/O Vdd	1.7	1.8 / 2.5	2.7	-	3.3	-	V
Operating temperature **		-40	-	85	-40	-	85	°C
Current consumption *	Reset 3)	-	<7		-	<9	-	µA
	Active	-	120		-	150	-	µA
	Motion Detection mode	-	120		-	150	-	µA
Acceleration range * [4)]	Nominal	-18	-	18	-	± 18	-	g
Offset calibration error *	Z-axis +1g position	-300	-	300	-	± 500	-	mg
Offset temperature error ** [5)]	-40 ... +85 °C	-	±3.0		-	±3.0	-	mg/°C
Sensitivity * [6)]		-	160	-	-	160	-	Count/g
Sensitivity calibration error *		-5	-	+5	-	± 5	-	%
Sensitivity temperature error ** [7)]	-40 ... +85 °C	-	±0.015		-	±0.015	-	%/°C
Non-Linearity ** [8)]		-	±3		-	±3	-	% FS
Cross-Axis sensitivity ** [9)]		-	±4	-	-	±4	-	%
Bandwidth ** [10)]	Measurement mode	45	60	75	-	60	-	Hz
	Narrow band measurement mode	7	9	11	-	9	-	Hz
	Wide band measurement mode	50	75	100	-	70	-	Hz
Noise ** [11)]	Measurement mode	-	50		-	50	-	mg RMS
	Narrow band measurement mode	-	22		-	22	-	mg RMS
	Wide band measurement mode	-	65		-	65	-	mg RMS
Output data rate **	Measurement mode	160	200	240	-	200	-	Hz
	Narrow band measurement mode	40	50	60	-	45	-	Hz
	Wide band measurement mode	320	400	480	-	400	-	Hz
Turn on time ** [12)]	Measurement mode	-	30		-	30	-	ms
	Narrow band measurement mode	-	200		-	200	-	ms
	Wide band measurement mode	-	20		-	20	-	ms
Output load **		-	-	35	-	-	35	pF
SPI clock rate **		-	-	325	-	-	325	kHz

* 100% tested in production

** Qualified during product validation

1) The product is factory calibrated at 2.5 V in room temperature.

2) Typical values are not guaranteed.

3) Includes the current through the internal 400 kΩ pull-up resistor connected to digital I/O Vdd.

4) Range defined as $\sqrt{x^2+y^2+z^2} \leq 18g$. The measuring range is tested on sensing element level. FS = 18g.

5) Offset temperature error = {Count(0g)-Offset} / Sensitivity [g]. Sensitivity = Calibrated sensitivity. Offset= Calibrated offset.

6) Sensitivity = {Count(+1g) - Count(-1g)}/2 [Count/g].

7) Sensitivity temperature error = {[Count(+1g)-Count(-1g)]/2 - Sensitivity} / Sensitivity x 100% [%]. Sensitivity = Calibrated sensitivity.

8) From straight line through sensitivity calibration (+1g, -1g) points.

9) The cross-axis sensitivity determines how much acceleration, perpendicular to the measuring axis, couples to the output. The total cross-axis sensitivity is the geometric sum of the sensitivities of the two axes which are perpendicular to the measuring axis. The angular alignment error between X, Y and Z axis is included into the cross axis sensitivity.

10) Frequency responses according to Figure 3, Figure 4 and Figure 5.

11) Average noise/axis over the measurement bandwidth defined as $\sqrt{\frac{1}{3}(n_x{}^2+n_y{}^2+n_z{}^2)}$, where nx, ny and nz are the measured signal's standard deviation due to noise in x, y and z directions.

12) Settling error less than 1% of FS.

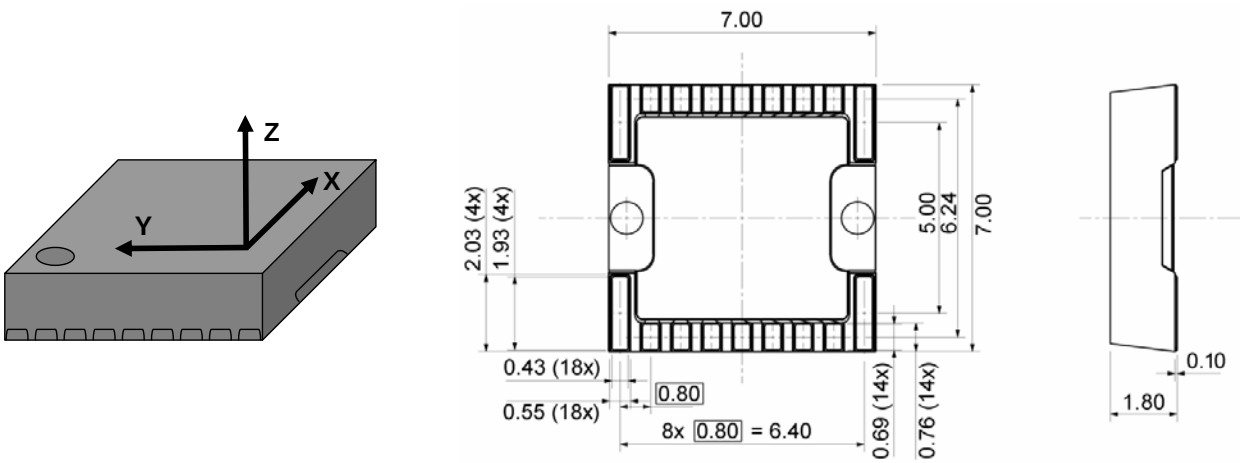

Figure 2 Sensing directions and package dimensions in mm with ±50 µm tolerance.

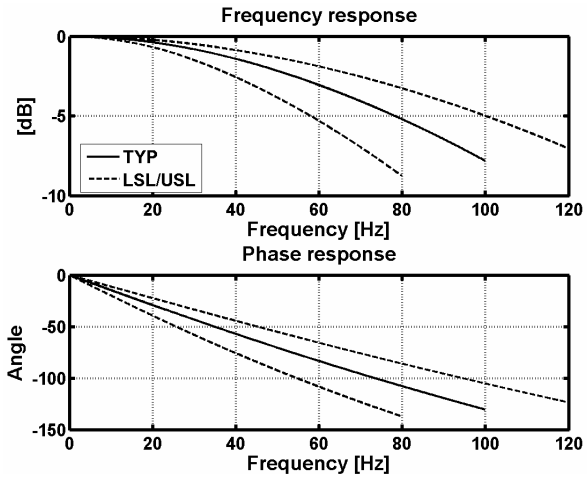

Figure 3 Frequency response of SCA3000-E05 in measurement mode

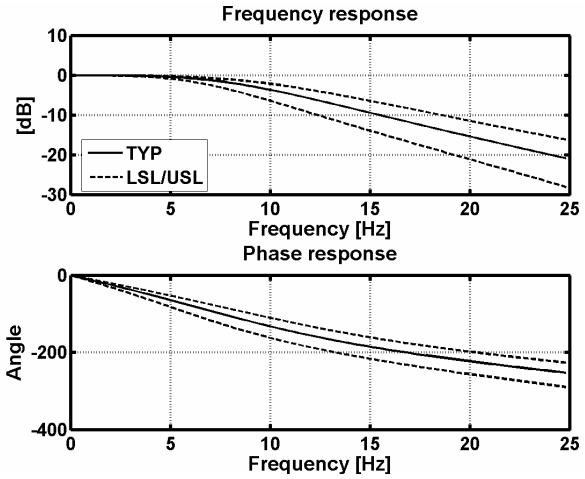

Figure 4 Frequency response of SCA3000-E05 in narrow band measurement mode

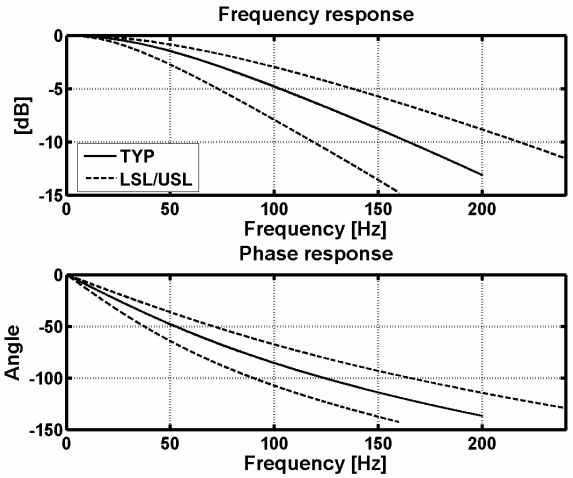

Figure 5 Frequency response of SCA3000-E05 in wide band measurement mode

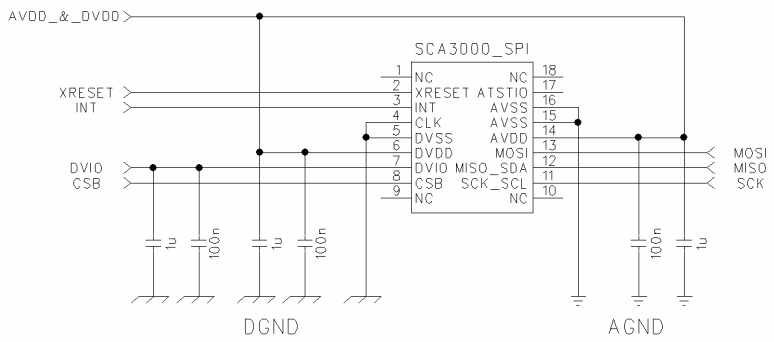

Figure 6 Application schematic

Pin #	Name	Function
1	NC	Not connected
2	XRESET	External reset, active low
3	INT	Interrupt output
4	CLK	Digital ground
5	DVSS	Digital ground
6	DVDD	Digital supply
7	DVIO	Digital I/O supply
8	CSB	Chip select
9	NC	Not connected
10	NC	Not connected
11	SCK_SCL	SPI serial clock (SCK)
12	MISO_SDA	SPI data out (MISO)
13	MOSI	SPI data in (MOSI)
14	AVDD	Analog supply
15	AVSS	Analog ground
16	AVSS	Analog ground
17	ATSTIO	Not connected
18	NC	Not connected

Table 1 Pin descriptions

Document Change Control

Rev.	Date	Change Description
0.1	11-Aug-06	First version
0.2	26-Oct-06	Frequency responses updated
0.3	04-Jan-07	Offset and sensitivity temperature dependencies updated. Turn-on time and noise characteristics added.
A	08-Feb-07	1st official release