DB LECTRO
COMPOSANTS ÉLECTRONIQUES
ELECTRONIC COMPONENTS

2.5V/50F SR2R5504Z

RoHS

■ Dimensions in mm(not to scale)

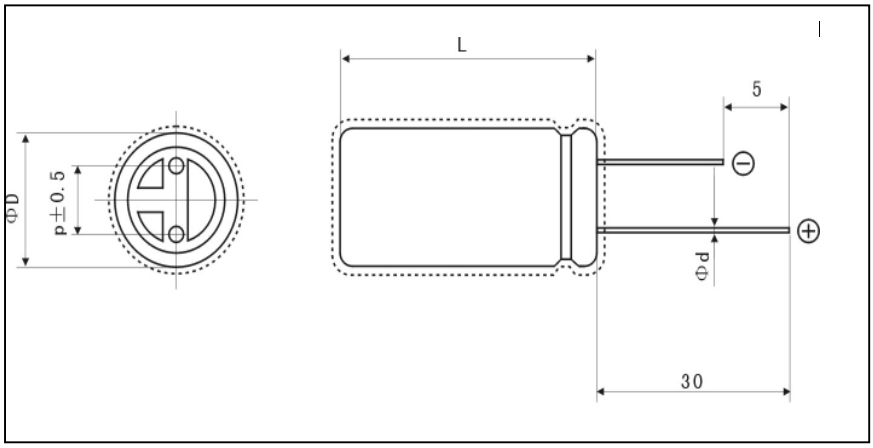



■ Specifications

Items		Specification
Nominal capacitance		50F
Capacitance tolerance		-20%～+80% (at 25℃)
Rated voltage		2.5V
Surge voltage		2.8V
ESR	AC（1kHz）	≤20mΩ
	DC (0.1A)	≤30mΩ
Dimension (ϕDxL mm)		Φ18x34
Operation temperature		-25 ~ 70℃
Storage temperature		-40 ~ 85℃
High/low temperature characteristics		From -25℃ to +70℃, |ΔC | ≤ 30% and ESR ≤ 4 times of initially measured values
Moistureproof characteristics		After fully charge, storage 500 hours at 55℃:and 90-95%RH, |ΔC | ≤ 30% and ESR ≤ 4 times of initially measured values
Load life test		After 1,000 hours application under 2.5V DC at 70℃, |ΔC| ≤ 30% of the initial value and ESR ≤4 times of initially measured values
Cycle life		Charge-discharge for 100,000 cycles at 2.5V and 25℃, |ΔC| ≤ 30% and ESR ≤4 times of initially measured value

Supercapacitor

■ Features

- RoHS compliant
- High capacitance and low resistance for long cycle life applications
- Small sized, light weight and maintenance free
- Wider temperature range(-25 ~ 70℃)

■ Applications

Primary or back-up power supply for video, audio, camera, printer, hand held scanner, telephone, car stereo, computer, toy, LED display, relay, electric buzzer, etc

■ Product list:

Part Number	Rated Voltage(V)	Nominal Capacitance(F)	ESR (Ω) (@1kHz)	Dimension (mm)		Solder Type
				Φ	L (or) T	
SR2R5223Z	2.5	2.2	≤0.28	10.0±0.1	21.0±0.2	
SR2R5333Z	2.5	3.3	≤0.15	10.0±0.1	21.0±0.2	
SR2R5473Z	2.5	4.7	≤0.10	13.0±0.1	21.0±0.2	
SR2R5104Z	2.5	10	≤0.05	13.0±0.1	34.0±0.2	
SR2R5204Z	2.5	20	≤0.04	16.0±0.1	34.0±0.2	
SR2R5304Z	2.5	30	≤0.03	16.0±0.1	32.0±0.2	
SR2R5504Z	2.5	50	≤0.02	18.0±0.1	32.0±0.2	
SR2R5105Z	2.5	100	≤0.02	22.0±0.2	54.0±0.2	
SR2R5125Z	2.5	120	≤0.02	22.0±0.2	45.0±0.2	
SC2R7302Z	2.7	0.3	≤70	7.05±0.1	2.5±0.2	V type
SC2R7702Z	2.7	0.7	≤30	9.65±0.1	2.7±0.2	V type，H type
SC2R7103Z	2.7	1.0	≤25	12.75±0.1	2.4±0.2	V type, H type
SC2R7203Z	2.7	2.0	≤15	16.3±0.1	2.4±0.2	V type, H type
SC2R7303Z	2.7	3.0	≤10	20.2±0.1	2.0±0.2	V type, H type
SC2R7603Z	2.7	6.0	≤6	20.3±0.1	3.3±0.2	V type, H type
SC2R7803Z	2.7	8.0	≤5	24.8±0.1	3.5±0.2	V type，H type
SC5R5152Z	5.5	0.15	≤150	7.05±0.1	5.0±0.2	V type
SC5R5222Z	5.5	0.22	≤70	9.65±0.1	4.6±0.2	V type，H type
SC5R5332Z	5.5	0.33	≤60	9.65±0.1	6.0±0.2	V type，H type
SC5R5472Z	5.5	0.47	≤45	12.75±0.1	4.3±0.2	V type, H type
SC5R5802Z	5.5	0.8	≤40	20.8±0.1	7.2±0.2	C, H, V type
SC5R5103Z	5.5	1.0	≤35	20.8±0.1	7.2±0.2	C, H, V type
SC5R5153Z	5.5	1.5	≤24	20.2±0.1	3.7±0.2	V type，H type
SC5R5303Z	5.5	3.0	≤15	20.3±0.1	6.7±0.2	V type，H type
SC5R5403Z	5.5	4.0	≤15	24.8±0.1	6.5±0.2	V type，H type

■ Part Number System

