SC2128C

REMOTE FAN CONTROL IC

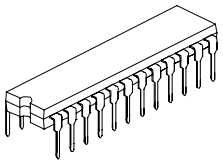

DIP-24-300-2.54

DESCRIPTION

The SC2128C is a high performance electronic fan controller LSI, Speed control, off-timer, rhythm wind, sleep mode, head swing and/or light control are all built into a single chip. Indicator LED output, buzzer output, key control input, as well as remote control decoding circuitry are all provided to build a full function electronic fan with remote control capability having the highest performance with the least external components. Pin assignment and application circuit are optimized for easy PCB layout and cost saving for electronic fan application.

FEATURES

* High performance CMOS Technology
* Low power consumption
* Optional independent light control
* 90 seconds cycle/6 seconds per step(off step 3 seconds) rhythm wind pattern
* Built-in remote control decoding circuitry with mask option custom code
* Available in 16,18,20,22,24 pin package for none, one set or two sets of swing head and/or light control
* Two sets of swing head and/or light control
* Three operation modes: ordinary, rhythm and rhythm sleep.

APPLICATIONS

* Optimized for fan application
* Suitable for heater fan, cooling fan, and other home appliances with remote control, timer and/or output level control

PIN CONFIGURATION

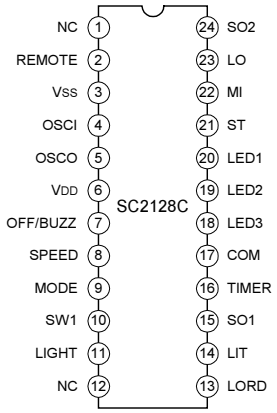

ORDERING INFORMATION

SC2128C- X X X X

- S = Swing Head Output(s) Controlled by a Single Key (Mask Option)
- D = Two Swing Head Outputs Controlled by Double Keys (D can be omitted)
- 0 = No Swing head Output
- 1 = 1 Swing head Output
- 2 = 2 Swing head Outputs
- 3 = 1 Swing head & Light Control Outputs
- 4 = 2 Swing head & Light Control Outputs
- 2 = 1/2/4 Hour, Non-Accumulated Timer
- 3 = 1/2/4 Hour, Accumulated Timer
- 4 = 0.5/1/2/4 Hour, Non-Accumulated Timer
- 5 = 0.5/1/2/4 Hour, Accumulated Timer
- 8 = 1/2/4/8 Hour, Non-Accumulated Timer
- 9 = 1/2/4/8 Hour, Accumulated Timer
- D = Non-Memory Start-up & Non-Middle Wind Start-up (Mask Option)
- C = Non-Memory Start-up & Middle Wind Start-up
- L = Memory Start-up & Non-Middle Wind Start-up (Mask Option)
- M = Memory Start-up & Middle Wind Start-up

Note: SC2128C Standard ICs: SC2128C-C41, SC2128C-C51, Other options are available upon request and require a minimum order Quantity. Please contact Silan or your local agent for details.

BLOCK DIAGRAM

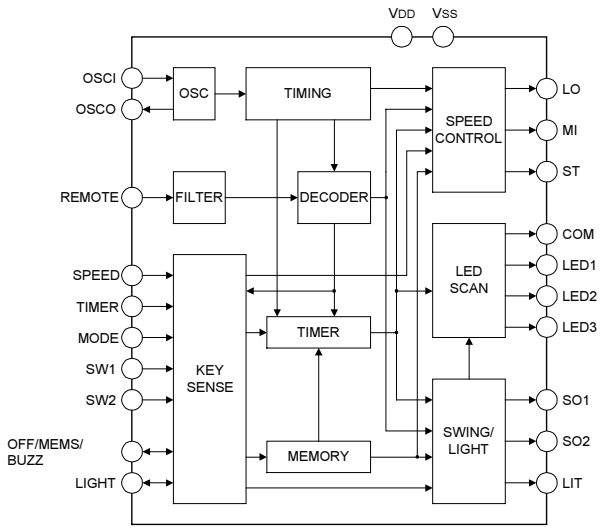

ABSOLUTE MAXIMUM RATINGS

Characteristic	Symbol	Test Conditions	Value	Unit
Supply Voltage	V_{DD}	--	0 ~ 6.0	V
Input/Output Voltage	V_I, V_O	V_{DD} - V_{SS}	-0.3V ~ V_{DD}+0.3V	V
Power Dissipation	P_D	V_{DD} – V_{SS} = 5.0	500	mW
Operating Temperature	Topr	--	-20 ~ +70	°C
Storage Temperature	Tstg	--	-40 ~ +125	°C

ELECTRICAL CHARACTERISTICS

Parameter	Symbol	Test conditions	Min	Typ	Max	Unit
Supply Voltage	V_{DD}	--	4.0	5.0	6.0	V
Stand-by Current	Iq	V_{DD}=5.0V, Oscillator stops. All output floating, All input fixed to V_{DD}.	--	134	200	μA
Input High Level Voltage	V_{IH}	--	V_{DD}-1.5	--	--	V
Input Low Level Voltage	V_{IL}	--	--	--	1.5	V
Drive Current (COM)	I_{OH}	V_{DD}=5.0V, Vo=3.5V	15	21.5	--	mA
Sink Current (COM)	I_{OL}	V_{DD}=5.0V, Vo=1.5V	-12	-16.5	--	mA
Drive Current(LED1, LED2, LED3)	I_{OH}	V_{DD}=5.0V, Vo=3.5V	5	6.5	--	mA
Sink Current(LED1, LED2, LED3)	I_{OL}	V_{DD}=5.0V, Vo=1.5V	-4	-5.7	--	mA
Drive Current (OFF/BUZZ)	I_{OH}	V_{DD}=5.0V, Vo=2.5V	1.5	3.0	--	mA
Sink Current (OFF/BUZZ)	I_{OL}	V_{DD}=5.0V, Vo=2.5V	-2	-3.7	--	mA
Sink Current (LO,MI,ST,SO1, SO2,LIT)	I_{OL}	V_{DD}=5.0V, Vo=2.5V	-6.5	-16	--	mA
Oscillation frequency	f_{OSC}	--	--	32768	--	Hz
Key Press Duration	T_{key}	--	80	--	--	ms
Remote Input Bit Duration	T_{bit}	--	2.0	2.5	3.0	ms

PIN DESCRIPTION

Pin No.	Symbol	I/O	Function
1	NC	--	No connection
2	REMOTE	I	Remote control sensor input
3	VSS	--	Negative power supply
4	OSCI	I	Oscillator input Pin
5	OSCO	O	Oscillator output Pin
6	VDD	--	Positive power supply
7	OFF/BUZZ	I/O	OFF control key input, shared with buzzer output
8	SPEED	I	SPEED key control input
9	MODE	I	MODE key control input
10	SW1	I	Swing head 1 control key input
11	LIGHT	I	Light control key input
12	NC	--	No connection
13	LORD	O	Ordinary wind indicator LED output
14	LIT	O	Light output
15	SO1	O	Swing head 1 output
16	TIMER	I	TIMER key control input
17	COM	O	Indicator LED common output
18	LED3	O	Indicator LED output Pin
19	LED2	O	Indicator LED output Pin
20	LED1	O	Indicator LED output Pin
21	ST	O	(Strong) Speed output Pin
22	MI	O	(Middle) Speed output Pin
23	LO	O	(Low) Speed output Pin
24	SO2	O	Swing head 2 output

FUNCTIONAL DESCRIPTION

1. CONTROL KEYS

Up to six(6) function keys – SPEED, MODE, TIMER, SW1, LIGHT and OFF/MEMS – may be used on the control panel of fan to access SC2128C to its full versatility. OFF/BUZZ key input pin serves further as buzzer output BUZZ pin. All key inputs are internally pulled-high in SC2128C.

SPEED key controls the fan speed. TIMER key adjusts off-timer. MODE key sets fan into various modes of operation. SW1 key control the head swing of fan. LIGHT key toggles the LIT output ON and OFF. OFF/BUZZ key resets the fan to idle state when fan is ON. LIT output is not affected by OFF key.

2. SPEED KEY

SPEED key is used to (1) turn on the fan (2) change speed of the fan. SLEEP key my turn on the fan from remote control handset. All the other key scan NOT turn on the fan. All the other keys, except LIGHT key, can NOT operate until fan is turned on. The diagram shows the state transition of SC2128C for successive pressing of SPEED key.

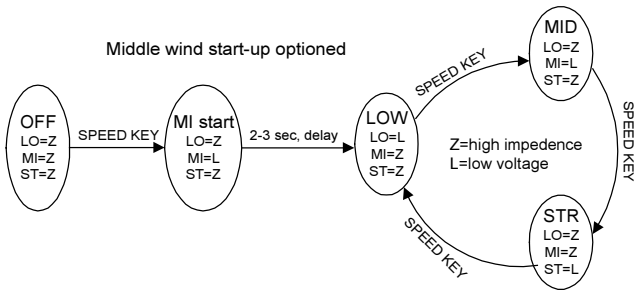

3. TIMER KEY

TIMER key is used to set time schedule after which SC2128C will automatically restore off state(off-timer). When the fan is on, pressing TIMER key sets up the off-timer. Each pressing of TIMER key increases the timer by one step. Each time increment step is determined by various timer options. Either 0.5 or 1 hour per step may be selected, and either 3 levels or 4 levels timer may be selected. Please see TIMER section for details.

4. MODE KEY

MODE key is used to bring SC2128C around ORD (ordinary wind) mode, RTM (rhythm wind) mode and RSL(rhythm sleep wind) mode. In ORD mode, the wind speed is set by SPEED key and does not change as time passes. In RTM mode the wind speed cycles through three rhythm wind, patterns as set by the SPEED key. In RSL mode, however, the fan automatically steps down one level (strong to middle, middle to low) every 30 minutes and keeps in low wind until off-timer times out. Four modes of operation are described in details later.

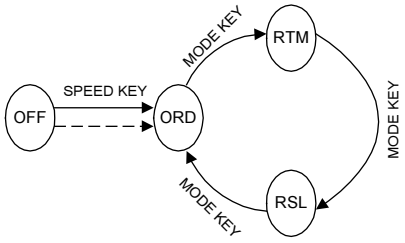

5. SW1 KEY

SW1 controls the output status of SO1 and SO2 outputs which in turn control the head swing of fan. Each pressing of SW1 key toggles SO1 and SO2 outputs as shown in the diagram right.

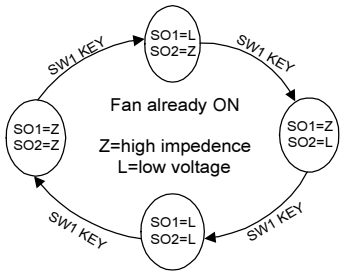

6. LIGHT KEY

LIGHT key toggles LIT output on(L) and off(Z). LIT output can only be controlled with LIGHT key (from both panel and remote control) and SLEEP key (if available) on remote control handset. OFF key does NOT affect LIT output. LIT output is NOT affected by OFF key as well as off-timer times out.

7. OFF/BUZZ KEY

OFF/BUZZ key functions differently depending on whether the fan is ON or OFF. It functions as OFF key when the fan is ON, and is used to bring SC2128C from any on state into off state. LIT output is NOT affected by OFF key.

8. INDICATOR LEDS

Up to twelve(13) indicator LEDs may be constructed on the control panel of fan built with SC2128C. Six(6) LED sare constructed as 3x2 LED matrix formed by COM and LED1, LED2, LED3. The other six(6) LEDs are built in series with TRIAC outputs and the thirteenth LED is used as Ordinary Wind mode indicator. The diagrams show how the LED matrix is constructed.

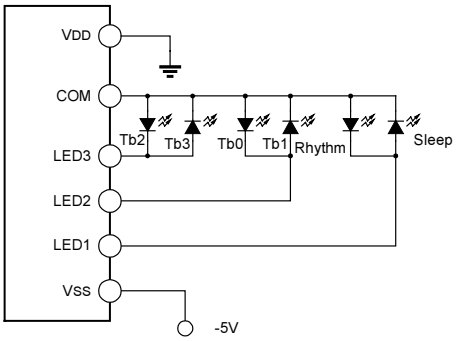

SC2128C

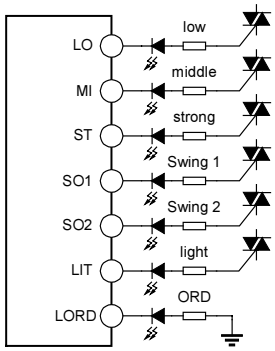

SC2128C

* Four LEDs (Tb0, Tb1, Tb2, Tb3) are used to indicate the off-timer period. Depending on the base timer step option, timer step may be 0.5 hour or 1 hour as indicated in the diagram.

If SC2128C is selected with 4 hour timer option → Tb0=0.5 hour, b1=1 hour, b2=2 hour, b3=4 hour

If SC2128C is selected with 8 hour timer option → Tb0=1 hour, b1=2 hour, b2=4 hour, b3=8 hour

The time schedule is the sum of all ON LEDs. For example, if SC2128C is programmed with 1/2/4/8 hour accumulated timer option, and is Tb0 is ON, Tb1 is OFF, Tb2 is OFF, Tb3 is ON, then the schedule period is 9 hours (1 hr + 9 hr).

* Rhythm LED , Sleep LED and Ordinary LED indicate SC2128C operation modes.

Operation mode	Rhythm LED	Sleep LED	Ordinary LED
ORD (ordinary wind)	OFF	OFF	ON
RTM (rhythm wind)	ON	OFF	OFF
RSL (rhythm sleep wind)	OFF	ON	OFF

* Three LEDs – Low, Middle and Strong – are used to indicate the respective output status of LO, MI, ST output. LED being ON indicates output active (L). LED being OFF indicates output inactive (Z). Only one output among LO, MI and HI may be active at a specific time.

* Swing1 LED, Swing2 LED and Light LED indicated respective output status of SO1, SO2, and LIT.

9. TIMER

The external timer of SC2128C may be bonding optioned into six (6) configurations as shown. Each pressing of TIMER key will step the internal timer one step up. The actual sequence depends on the TIMER option selected. The following diagrams show the timer sequence for each TIMER option. TIMER automatically counts down as time passes by. The count down sequence reverses the key sequence and is also shown in the following diagrams.

☆: 0.5, 1, 2, 4 hours non-accumulated
: 1, 2, 4, 8 hours non-accumulated
: 0.5, 1, 2, 4 hours accumulated
: 1, 2, 4, 8 hours accumulated
: 1, 2, 4 hours non-accumulated
: 1, 2, 4 hours accumulated

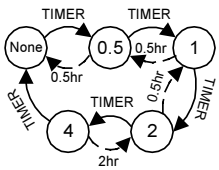

(1)

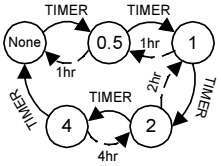

(2)

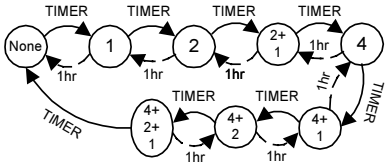

(6)

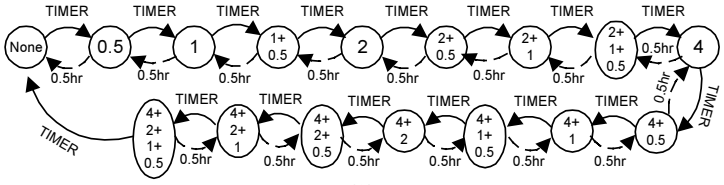

(3)

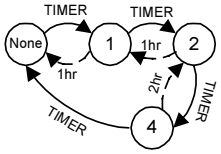

(5)

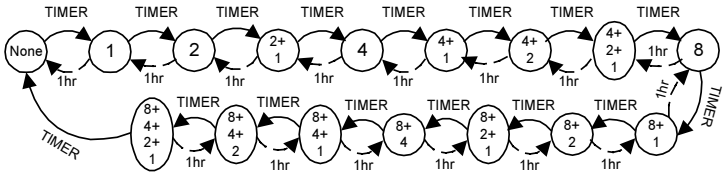

(4)

10. RHYTHM WIND

SC2128C features rhythm wind mode. It can be set into rhythm wind mode by pressing MODE key. Furthermore, there are three levels – strong, middle and low rhythm wind. Pressing SPEED key cycles SC2128C around the three levels, from low to middle, middle to strong, then strong to low. Initial rhythm wind level on entering RHYTHM wind mode is the same as the ordinary wind level while leaving ORDINARY wind mode and entering RHYTHM wind mode. The right diagram depicts the strong, middle and low rhythm wind patterns.

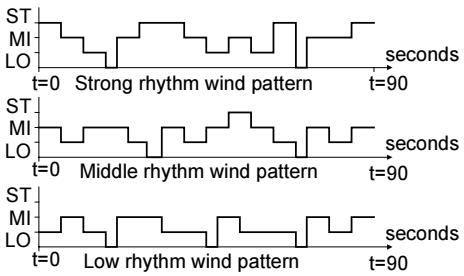

11. RHYTHM SLEEP WIND MODE

Pressing MODE key in sleep wind mode brings SC2128C into rhythm sleep wind. In rhythm sleep wind mode, SC2128C outputs LOW, MIDDLE or STRONG rhythm wind pattern and automatically steps down one level every 30 minutes until it reaches low rhythm wind level. If no off-timer is set, SC2128C keeps in low rhythm wind output. Otherwise it restores off state when the off-timer times out.

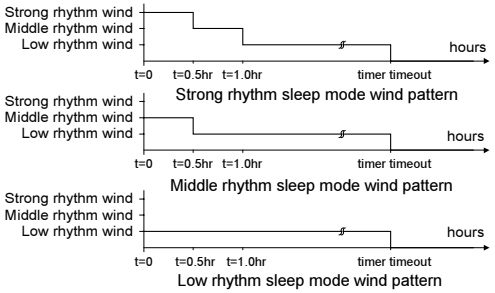

12. BUZZER OUTPUT

All valid key pressed except OFF/BUZZ initiates a 150ms duration 4kHz 50% duty cycle pulse train at OFF/BUZZ pin. OFF/BUZZ key function as OFF key if pressed when fan is in any on state. In this case, it does NOT initiate an output on BUZZ. Note that when OFF/BUZZ outputs the pulse train, key input is suppressed. That is, pressing OFF/BUZZ key when the buzzer is buzzing is NOT recognized by SC2128C. The diagram right shows the buzzer connection.

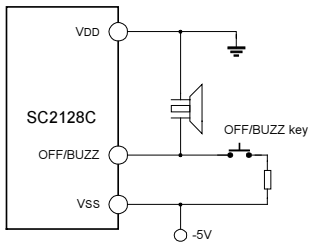

13. REMOTE CONTROL DECODER

SC2128C is designed to be used together with SC2268 infrared ray remote control encoder. Such combination allows up to 8 remote control keys – SPEED, MODE, TIMER, LIGHT, SLEEP, SW1, SW2, OFF/BUZZ – to be built on the remote control handset. 4 bits customer code, b3 ~ b6, is encoded by SC2268 and decoded by SC2128C in order to avoid remote control contention between devices. With SC2268, b3 is determined by bonding option; b4, b5 and b6 are determined by connecting respective c4, c5, c6 pin to VDD or VSS. With SC2128A, b3 and b6 can be mask programmed upon customer request and with NRE.

The remote control signal coding scheme is fully compatible with SC2268. Some description follows. Please refer to specification of SC2268 for details. When SC2128C receives a remote control signal at its REMOTE pin, it decodes the received waveform into consecutive “0” bits and “1” bits. It first compares the received start word against its customer code. If and only if the start word matches the customer code, it then compares for two consecutive and matched code words. It then actuates the command according to the code words table shown later.

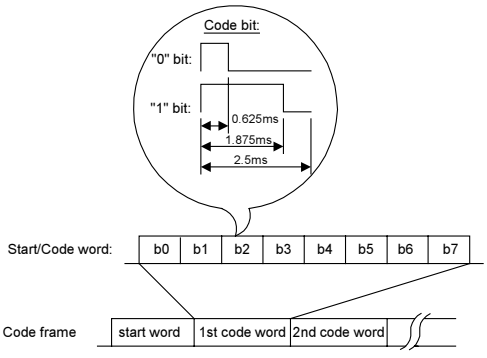

14. CUSTOMER CODE

The default customer code of SC2128C is internally mask programmed to b0 ~ b7 = 00110011. Code bit b3 ~ b6 may be mask programmed to any value according to customer specification under terms and conditions agreed by SILAN. Suitable NRE is involved with customizing default customer code. Please refer to the following table.

Mask Option	**Start word**							
Default Customer Code	b0	b1	b2	b3	b4	b5	b6	b7
Mask Programmable Customer Code	0	0	1	1	0	0	1	1
	0	0	1	1	0	0	0	1
	0	0	1	1	0	1	1	1
	0	0	1	1	0	1	0	1
	0	0	1	1	1	0	1	1
	0	0	1	1	1	0	0	1
	0	0	1	1	1	1	1	1
	0	0	1	1	1	1	0	1
	0	0	1	0	0	0	1	1
	0	0	1	0	0	0	0	1
	0	0	1	0	0	1	1	1
	0	0	1	0	0	1	0	1
	0	0	1	0	1	0	1	1
	0	0	1	0	1	0	0	1
	0	0	1	0	1	1	1	1
	0	0	1	0	1	1	0	1

15. REMOTE CONTROL KEYS

Up to eight keys may be built on the remote control handset. Except SLEEP key, all keys functions the same as their panel counterparts. SLEEP key is not available on fan panel, and is only available on remote control handset. Pressing SLEEP key brings SC2128C to the output states as follows:

SPEED Middle wind
MODE RTM wind
TIMER 4 hours or 8 hours
SWING SO1 ON, SO2 OFF
LIGHT LIT ON

The remote transmission code words are defined in the following table.

Equivalent Key	**Code word**								**SC2268 Corresponding Keys**
	b0	**b1**	**b2**	**b3**	**b4**	**b5**	**b6**	**b7**	
SPEED	0	0	1	1	1	0	1	0	I1
MODE	0	1	0	1	1	0	0	0	I2
TIMER	0	1	1	0	0	0	1	0	I3
LIGHT	1	0	0	1	1	1	0	0	I4
SLEEP	1	0	1	0	0	1	1	0	I5
SW2	1	0	1	1	0	0	0	1	I6
SW1	1	1	0	0	0	1	0	1	I7
OFF/MEMS	1	1	0	1	0	0	1	0	I8

16. VARIOUS OPTIONS

SC2128C accommodates many option possibilities. The options are summarized below:

* Package Option:

Either 16, 18, 20, 22, or 24 pin package.

* Bonding option:

ACC: Accumulated or non-accumulated timer option.

T0.5: Timer scale, 0.5/1/2/4 hour timer or 1/2/4/8 timer option.

3LT: Timer level option, either 4 levels or 3 levels.

NM: Disable memory mode.

* Metal Option:

b3 ~ b6: Replaces default customer codes

NMS: Disable middle wind start-up function

2SW: Dependent/Independent swing head control option.

APPLICATION CIRCUIT

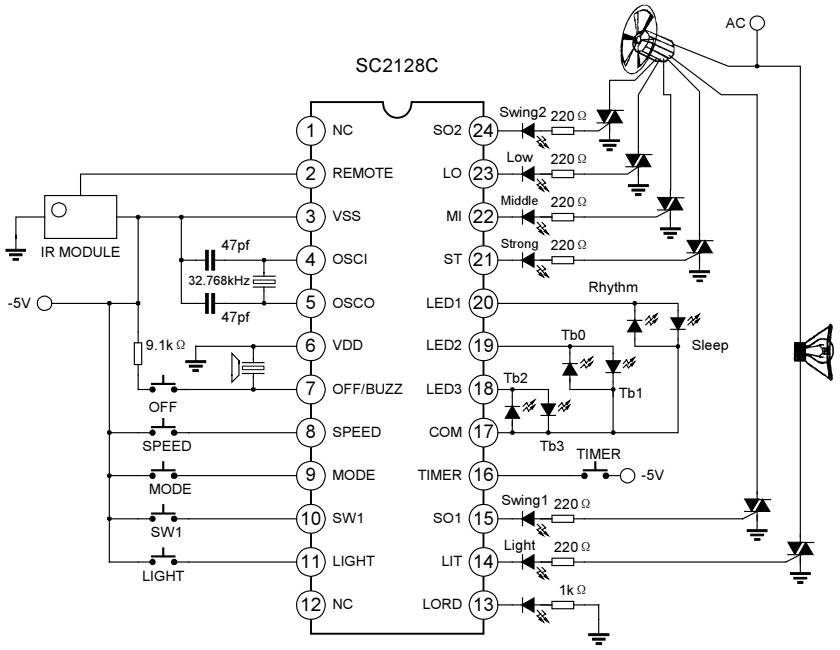

Two Swing Head Controlled by SW1

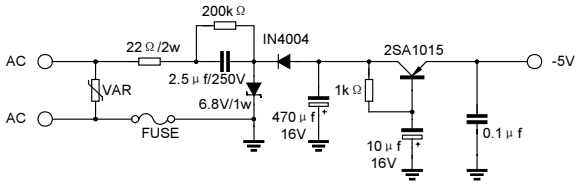

Supply Circuit

SC2268 IR TRANSMITTER APPLICATION CIRCUIT

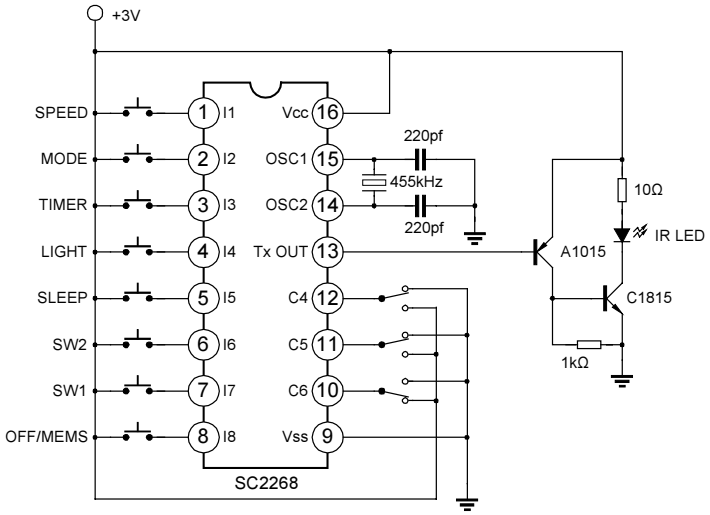

Note: SC2268 is recommended to be used with SC2128C. For this circuit, the “Start Word” is “00110011”

PACKAGE OUTLINE

DIP-24-300-2.54

