SC21152

Tiny 1.2A Synchronous Buck Regulator with Power Good

POWER MANAGEMENT

Features

- Input voltage range — 2.3V to 5.5V
- 1.2A continuous output current
- 4MHz switching frequency
- Adjustable Output Voltage
- 1% output voltage accuracy
- Adaptive On-Time architecture
- Up to 100% duty cycle
- Up to 96% peak efficiency
- Power Save mode for efficient light load operation
- >90% efficiency 30mA to 75mA
- 0.1µA shutdown current
- 21µA quiescent current
- Power Good Indicator
- Pre-bias startup protection
- Internal soft start
- 1.5mm x 2mm, 6-Lead MLPD package
- WEEE and RoHS compliant and halogen-free

Applications

- Tablet PCs
- GPS devices
- Battery powered equipment
- Portable devices
- Smart Phones
- Wearable Electronics

Description

The SC21152 is an ultra high efficiency 1.2A DC/DC buck regulator available in a small MLPD package. These features make the SC21152 perfect for small form factor consumer applications where high efficiency is essential. SC21152 is an Adaptive On-Time 4MHz switching regulator at full load conditions. Under light load conditions it transitions into PFM Power Save Mode and reduces switching frequency thus saving energy. High switching frequency operation allows the use of a very small 0.47µH inductor along with small input and output capacitors to minimize overall circuit size.

The SC21152 is highly configurable with a wide range of factory options including internal soft start time, fixed or adjustable output voltage, automatic output discharge, and switching frequency.

The SC21152 is offered in a small 6-Lead 1.5mm x 2mm MLPD package.

Typical Application Circuit

Fixed Output Voltage

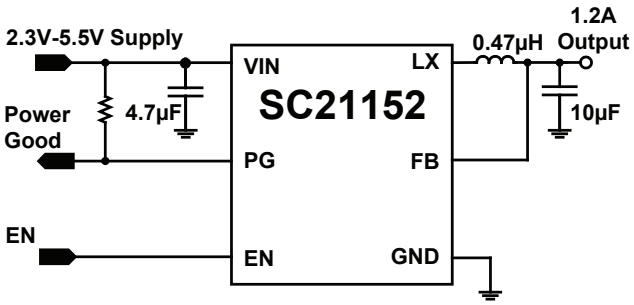

Adjustable Output Voltage

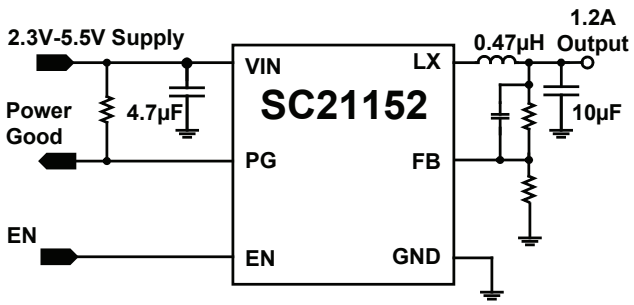

© 2015 Semtech Corporation

Ordering Information

Device [1][2]	Options[3]			Package
	Output[3]	Soft Start[3]	Output Discharge[3]	
SC21152AULTRC	Adjustable	100µs	Automatic	1.5mm x 2mm 6-Lead MLPD
SC21152EVB	Evaluation Board 1.5mm x 2.0mm 6-Lead MLPD			

Notes:
(1) Available in tape and reel only. A reel contains 3,000 devices.
(2) Lead-free packaging only. Device is WEEE and RoHS compliant and halogen-free.
(3) For other device options not shown contact Semtech Marketing.
The following options can be made available:
VOUT options : adustable and fixed output voltage from 0.8V to 3.6V in 50mV increments.
Soft Start options: internal 100µs, 200µs, 400µs, or 800µs.
Output Discharge options: Automatic Discharge and No Discharge.
Frequency: The default operating frequency is 4MHz with options of 2.2MHz, 3MHz, or 6MHz.

Pin Configuration

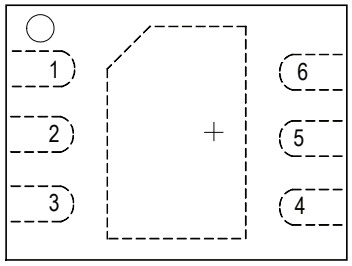

TOP VIEW

6-Lead MLPD
1.5x2.0 (mm)

Pin Assignments 6-Lead MLPD	
Pin #	**Name**
1	VIN
2	PG
3	EN
4	FB
5	GND
6	LX
PAD	PAD

Marking Information

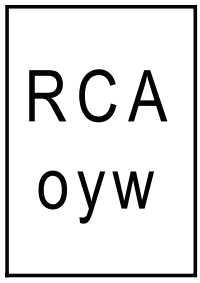

TOP VIEW

1.5x2.0 (mm)
6-Lead MLPD

1.5x2.0 (mm) 6-Lead MLPD Marking Diagram
RCA = Device Marking Code
oyw = Pin 1 Indicator and Date Code

Absolute Maximum Ratings

VIN (V) . . . . . -0.3 to +6.0
EN, FB (V). . . . . -0.3 to +(VIN+0.3)
PG (V) . . . . . -0.3 to (VIN+0.3)
LX (V). . . . . -0.3 to +(VIN+0.3)
ESD Protection Level (kV)(1) 4

Recommended Operating Conditions

Input Voltage Range (V) . . . . . 2.3 to 5.5
Output Voltage Range, Adjustable VOUT (V) . . . 0.8 to VIN
Output Voltage Range, Fixed VOUT (V) . . . . . 0.8 to 3.6
Maximum Continuous Current (A). 1.2
Junction Temperature Range (°C) . . . . . $-40 < T_J < +125$

Thermal Information

Thermal Resistance Junction to Ambient(2) (°C/W)
MLPD package. 120
Maximum Junction Temperature (°C) . . . . . +150
Operating Junction Temperature (°C). . . . . -40 to +125
Storage Temperature Range (°C) . . . . . -65 to +150
Peak IR Reflow Temperature (10s to 30s) (°C) . . . . . +260

Exceeding the above specifications may result in permanent damage to the device or device malfunction. Operation outside of the parameters specified in the Electrical Characteristics section is not recommended.

NOTES:
(1) Tested according to JEDEC standard JESD22-A114-B.
(2) Calculated from package in still air, mounted to 3 x 4.5 (in), 4 layer FR4 PCB with thermal vias under the exposed pad per JESD51 standards.

Electrical Characteristics

Unless otherwise noted VIN = 5.0V, CIN = 4.7µF, COUT = 10µF, L = 0.47µH, EN = VIN, T_J = -40 to +125°C. Typical values are at T_A = 25°C.

Parameter	Symbol	Conditions	Min	Typ	Max	Units
Input Supply						
Input Supply Voltage Range	VIN		2.3		5.5	V
Shutdown Current	ISD	EN = 0V		0.1		µA
Quiescent Current	IQ	Operating, No Load, Power Save Option		21		µA
Under Voltage Lock Out Threshold	UVLOrise	VIN rising edge	2.05	2.16	2.27	V
Under Voltage Lock Out Hysteresis	UVLOhyst			85		mV
Output Voltage						
Feedback Voltage	VFB	Adjustable VOUT Option only		0.80		V
Feedback Voltage Tolerance	VFBtol	PWM operation, 500mA load	-2	+/- 1	+2	%
Feedback Input Leakage Current	IFB	Adjustable VOUT Option		1	25	nA
Output Voltage Range	Vout	Adjustable Output Voltage	0.8		VIN	V

Electrical Characteristics (continued)

Parameter	Symbol	Conditions	Min	Typ	Max	Units
Output Voltage (continued)						
Output Voltage Line Regulation	dVline	5.5V > VIN > (Vout +1), PWM operation		0.17		%/V
Output Voltage Load Regulation	dVload	500mA < ILOAD < 1.2A		-0.13		%/A
Maximum Output Current	IOUT	Continuous current	1.2			A
Soft Start[1]						
Soft Start Time [1]	TSS	FB: from rising edge to 95% of final value		100		µs
LX Switching Node						
On Resistance High-side	Rdson_hs	FB = 0V; ILX = 500mA		180		mΩ
On Resistance Low-side	Rdson_ls	FB = VIN; ILX = 500mA		140		mΩ
LX Leakage Current High Side	ILX_hs	VIN = 5.5V; FB = VIN; VLX = 0V	-1.5	-0.1		µA
LX Leakage Current Low Side	ILX_ls	FB = 0V; VLX = VIN; Vout Automatic Discharge disabled		0.1	1	µA
LX Pulldown Current[1]	ILX_pd	EN = 0V; VLX = 1V; Vout Automatic Discharge enabled		20		mA
Switching Frequency[1]	Fsw	4MHz PWM operation, 500mA load, adjustable output, VOUT = 2.5V	3.6	4.0	4.4	MHz
Current Sense						
High Side Current Limit	ILIMhs	Current from VIN to LX	1.5	2.2	3.0	A
Low Side Current Limit	ILIMls	Current from LX to GND		-0.8		A
Zero Cross Detector Threshold	Ithzcpfm	Power Save Mode and DC Test condition		0		mA
Thermal Protection						
Over-Temperature Shutdown	Tts_rise	Rising temperature		160		°C
Over-Temperature Hysteresis	Tts_hyst			10		°C
EN Input						
EN Input High Threshold	VIHen		1.2			V
EN Input Low Threshold	VILen				0.4	V
EN Input High Current	IIHen	VEN = VIN	-1			µA
EN Input Low Current	IILen	VEN = 0V			1	µA

Electrical Characteristics (continued)

Parameter	Symbol	Conditions	Min	Typ	Max	Units
Power Good Output(1)						
PG Low Voltage	VLOpg	IPG = 5mA			0.4	V
PG Open Leakage Current	IOHpg	VPG = VIN			1	µA
Power Good Threshold	PGth	FB rising edge, percentage of FB final value		95		%
Power Good Threshold Hysteresis	PGthhy	percentage of FB final value (rising to falling edge)		3		%
Power Good Assert Time	PGtdr	from FB = Power Good Threshold to PG open drain		75		µs
Power Good Deassert Time	PGtdf	from falling edge of FB to PG pulled to GND		13		µs

Notes:

(1) The SC21152 can be configured with a range of options as shown. Contact Semtech Marketing for more information.
VOUT options: adjustable or fixed output voltage.
For fixed VOUT, the voltage can be specified from 0.8V to 3.6V in 50mV increments.
Soft Start options: Fixed 100µs with options of 200µs, 400µs, and 800µs.
Frequency options: Operating frequency is 4MHz with options of 2.2MHz, 3MHz, or 6MHz.
Output Discharge options: VOUT Automatic Discharge or No Discharge.

Typical Characteristics

Efficiency vs. Load - 5VIN

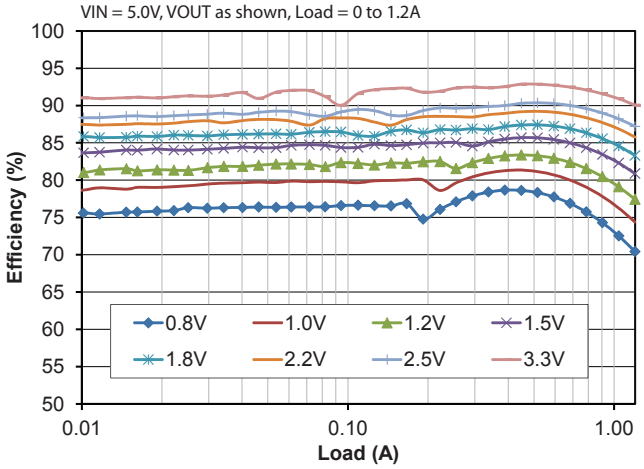

Efficiency vs. Load - 4.2VIN

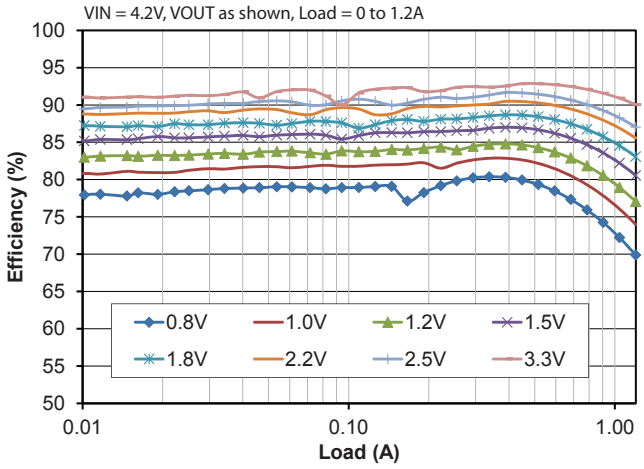

Efficiency vs. Load - 3.3VIN

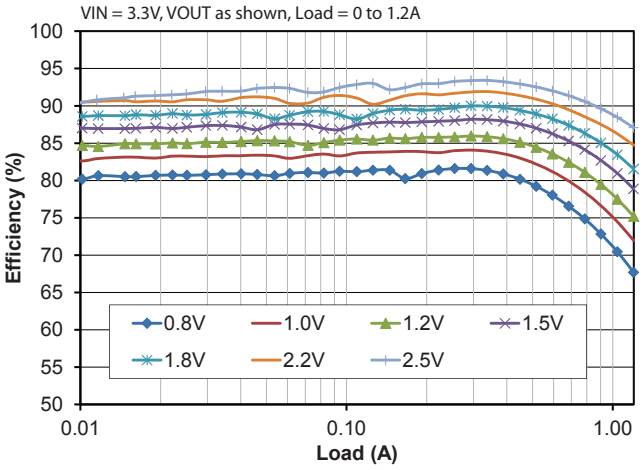

Efficiency vs. Load - 2.3VIN

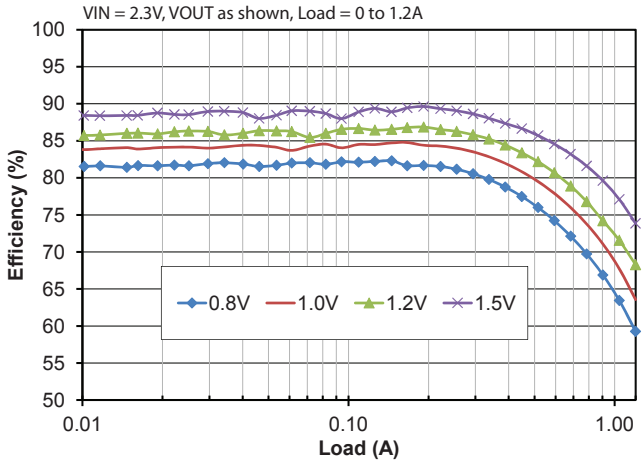

Efficiency vs. Load - VOUT 1.0V

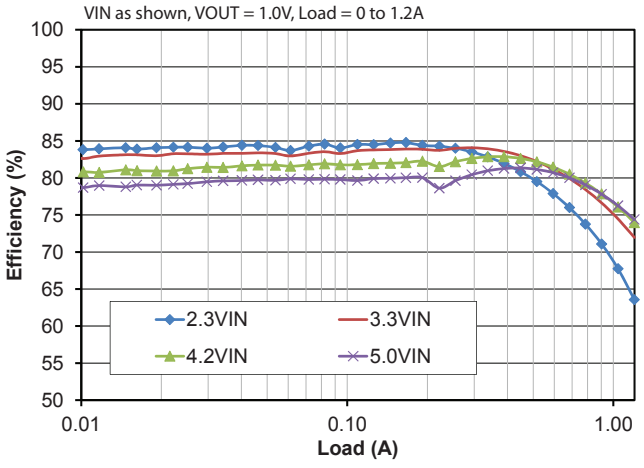

Efficiency vs. Load - VOUT 1.8V

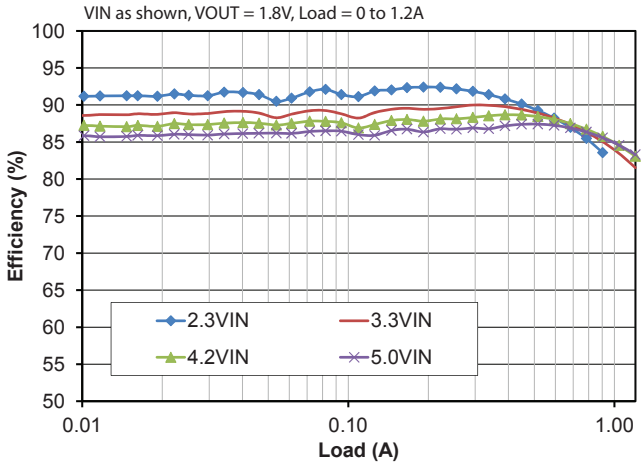

Typical Characteristics

Frequency vs load - 5VIN, PWM operation

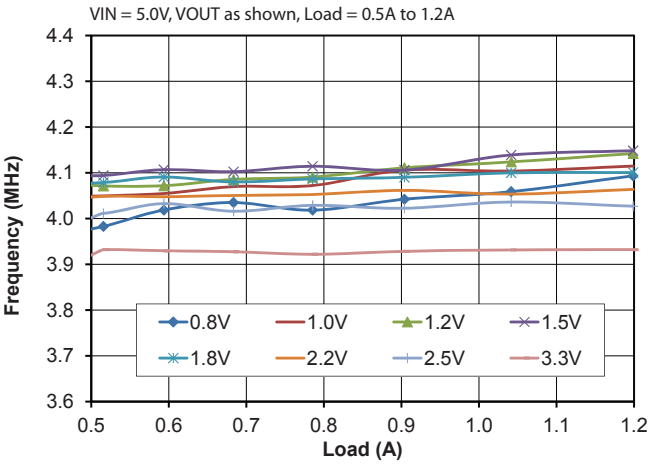

Frequency vs load - 3.3VIN, PWM operation

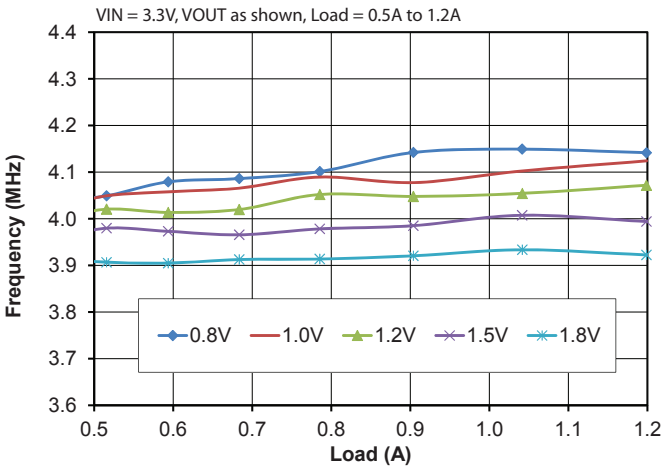

Frequency vs load - 2.3VIN, PWM operation

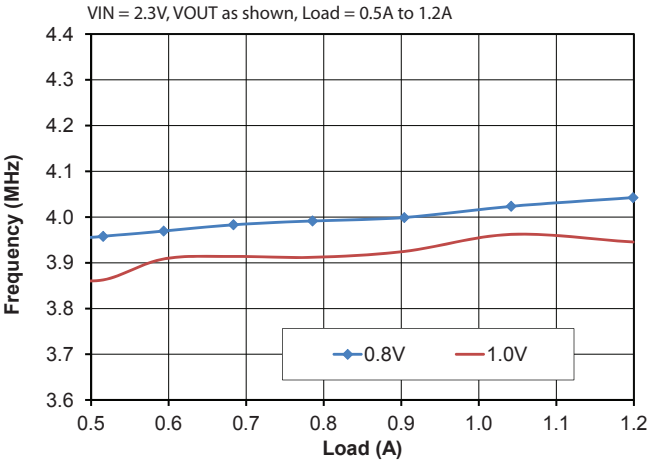

Quiescent Current vs Output Voltage

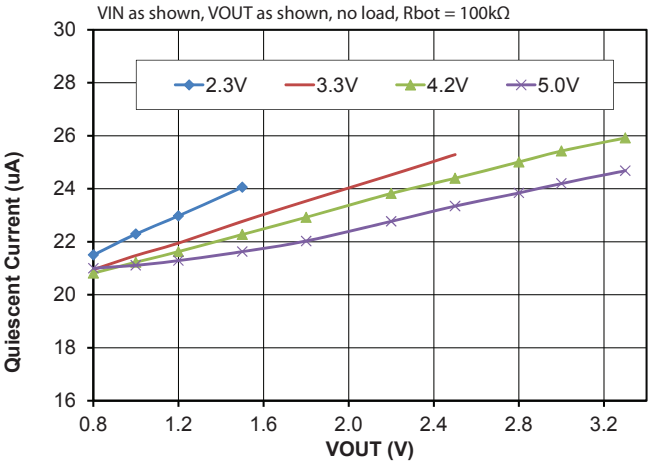

RDS_{ON} vs. Input Voltage

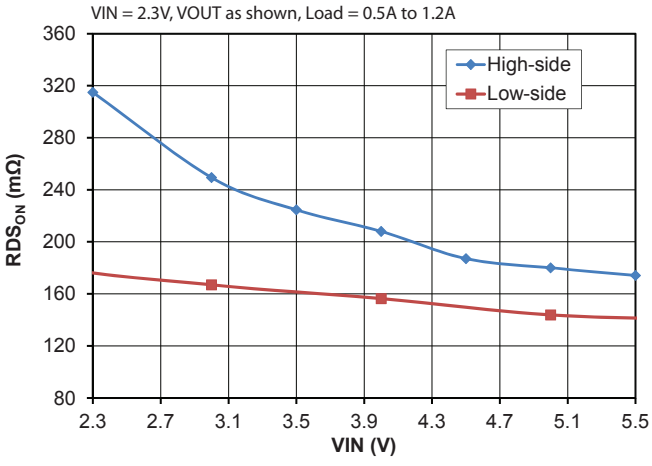

RDS_{ON} vs. Temperature

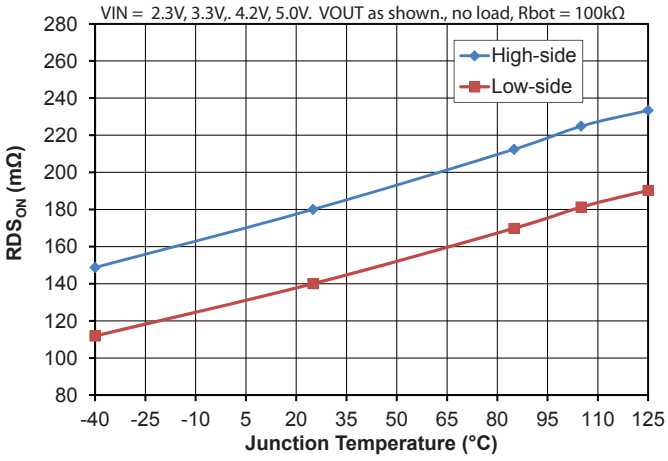

Typical Characteristics (continued)

Power Save Operation — no load

VIN = 5V, VOUT = 1.5V, 0mA load

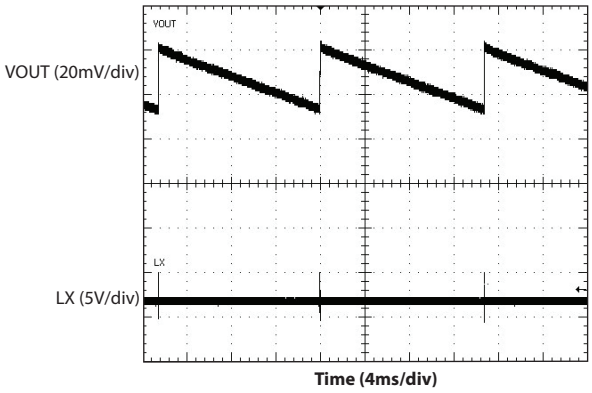

Startup - VIN ramp

VIN = EN = ramp to 2.3V , VOUT = 1.5V, 0mA load

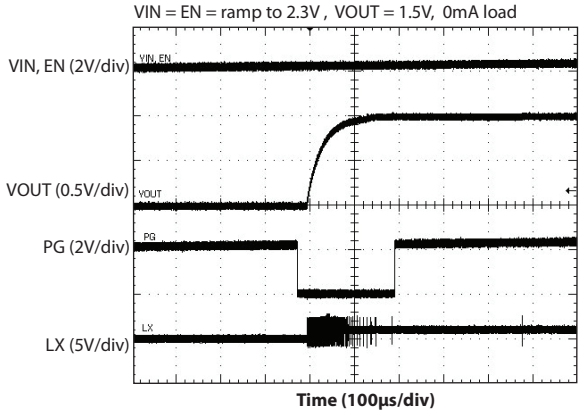

Power Save Operation — 50mA load

VIN = 5V, VOUT = 1.5V, 50mA load

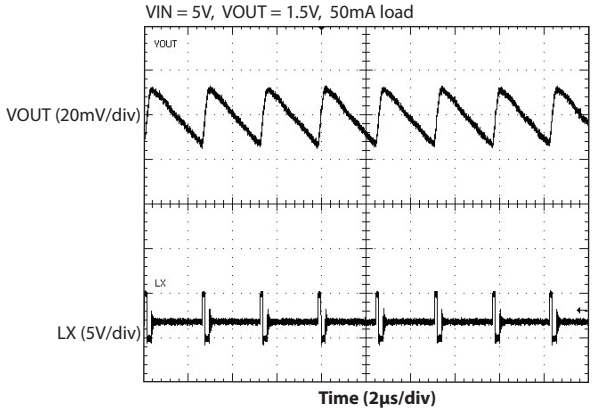

Startup - EN control

VIN = 5V, VOUT = 1.5V, 0mA load

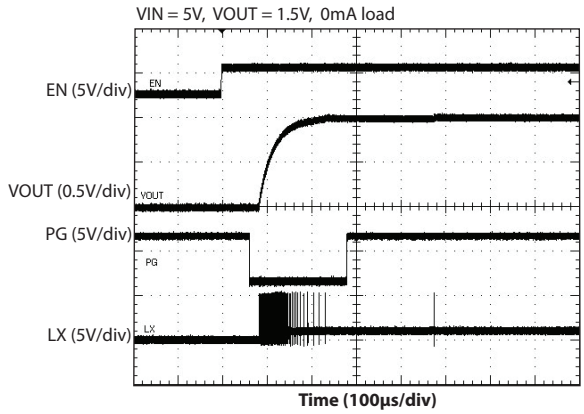

PWM Operation — 1.2A

VIN = 5V, VOUT = 1.5V, 1.2A load

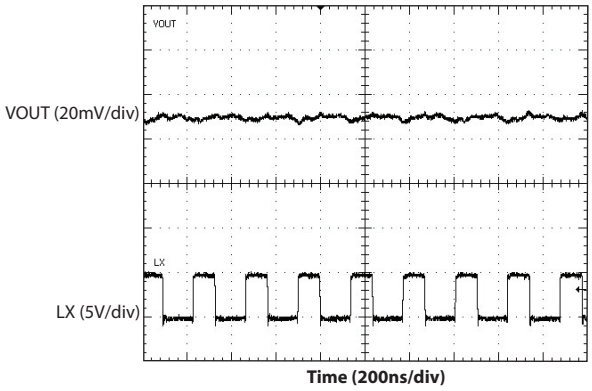

Startup - 1.2A load

VIN = 5V, VOUT = 3.3V, 1.2A Load

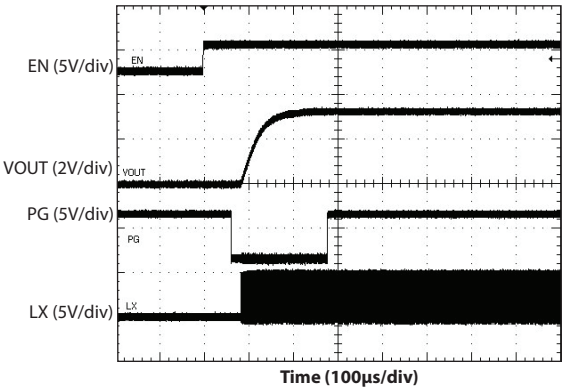

Typical Characteristics (continued)

Load Transient - Power Save PFM to PWM

VIN = 5V, VOUT = 1.0V, Load 0A to 1.2A to 0A

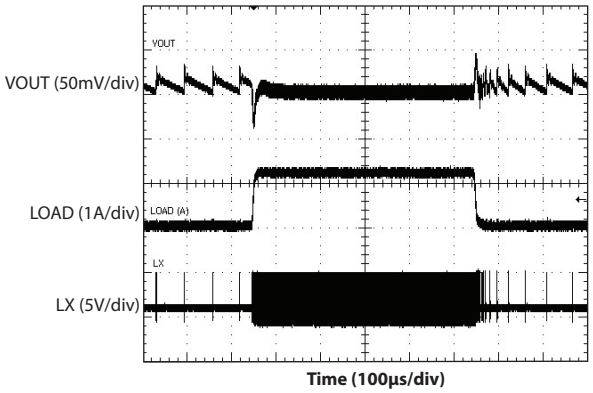

Load Transient - Power Save PFM to PWM

VIN = 5V, VOUT = 3.3V, Load 0A to 1.2A to 0A

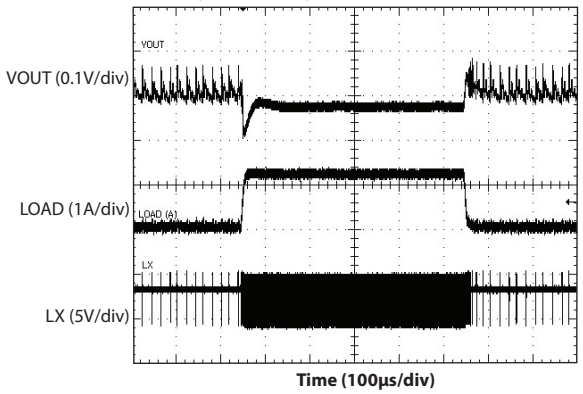

Load Transient - PWM to PWM

VIN = 5V, VOUT = 1.0V, Load 0.5A to 1.2A to 0.5A

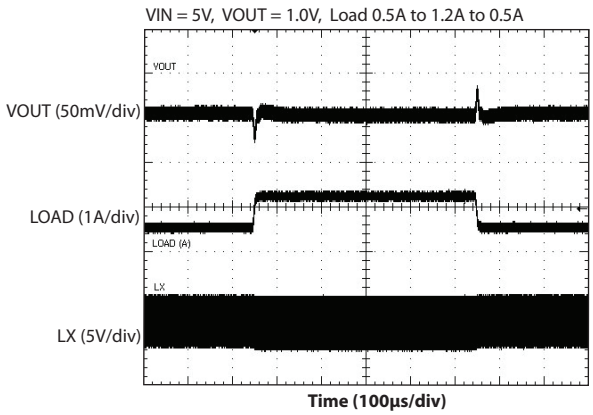

Load Transient - PWM to PWM

VIN = 5V, VOUT = 3.3V, Load 0.5A to 1.2A to 0.5A

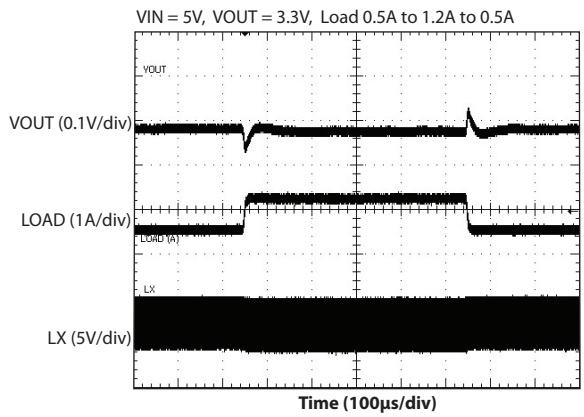

PWM Minimum Off Operation

VIN = 3.6V, VOUT = 3.3V, 500mA Load

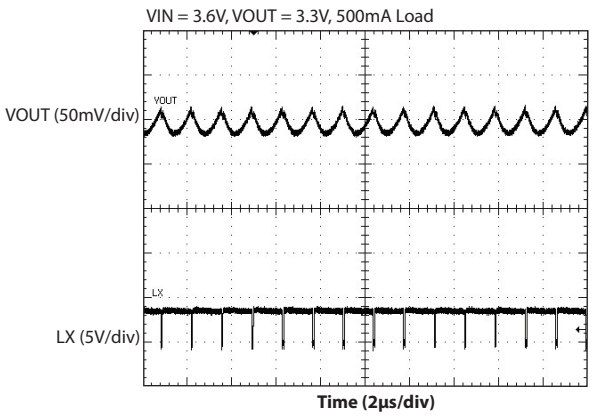

Overcurrent Shutdown and Recovery

VIN = 5V, VOUT = 1.0V, Load 0A to 2.0A to 0A

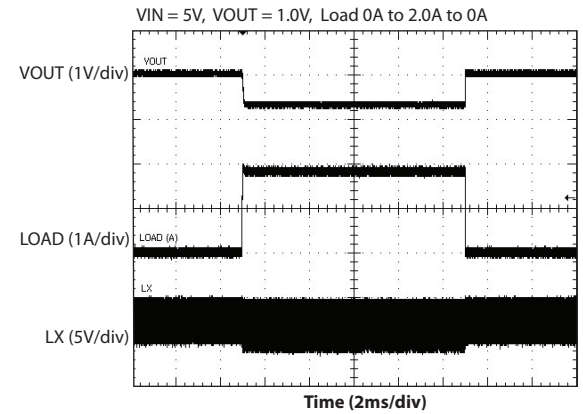

Detailed Application Circuits

Fixed Output Voltage

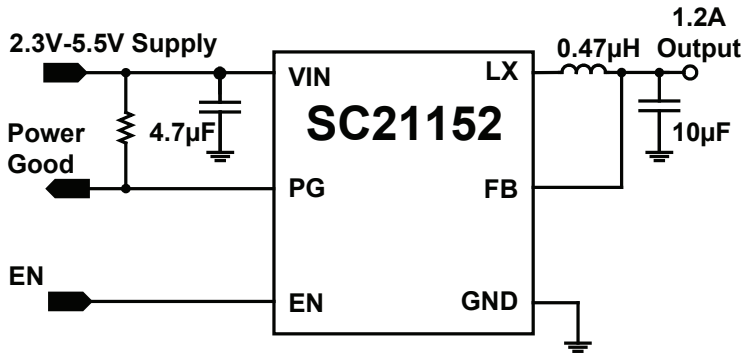

Adjustable Output Voltage

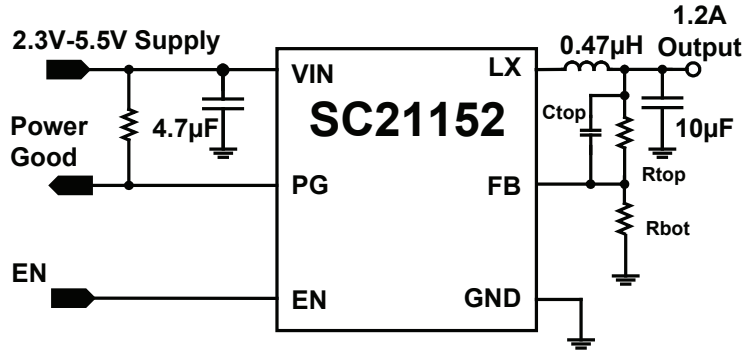

VOUT	L	CIN	COUT	Rtop	Ctop	Rbot
0.8V	0.47uH Current rating 1.2A minimum Murata LQM21PNR47MGH 2x1mm, 40mΩ Wurth 74479876147 2x1mm, 40mΩ	4.7uF 0402 X5R	10uF 0402 X5R	zero	n/a	n/a
1.0V				24.9kΩ	22pF	100kΩ
1.2V				49.9kΩ		100kΩ
1.5V				88.7kΩ		100kΩ
1.8V				124kΩ		100kΩ
2.2V				24.9kΩ		100kΩ
2.5V				174Ω		100kΩ
2.8V				249kΩ		100kΩ
3.3V				316kΩ		100kΩ

Pin Descriptions - 1.5x2mm 6-lead MLPD

Pin #	Pin Name	Pin Description
1	VIN	Input Supply Voltage for the device and sense point for the input Under Voltage Lock Out.
2	PG	Power Good Output. Open-drain Power Good indicator. An open indicates that the output voltage is in regulation. The Power Good pin requires an external pullup.
3	EN	Enable input. Connect to logic high or VIN to enable the device. Connect to logic low or GND to disable the device.
4	FB	Feedback input (output voltage sense). For adjustable VOUT options, connect to the midpoint of a resistor divider between the output capacitor and GND. For fixed VOUT options connect to the output capacitor.
5	GND	Ground connection.
6	LX	Switching node connection to inductor.
PAD	PAD	Thernal ground for heatsinking. Connect to GND with multiple vias.

Block Diagram

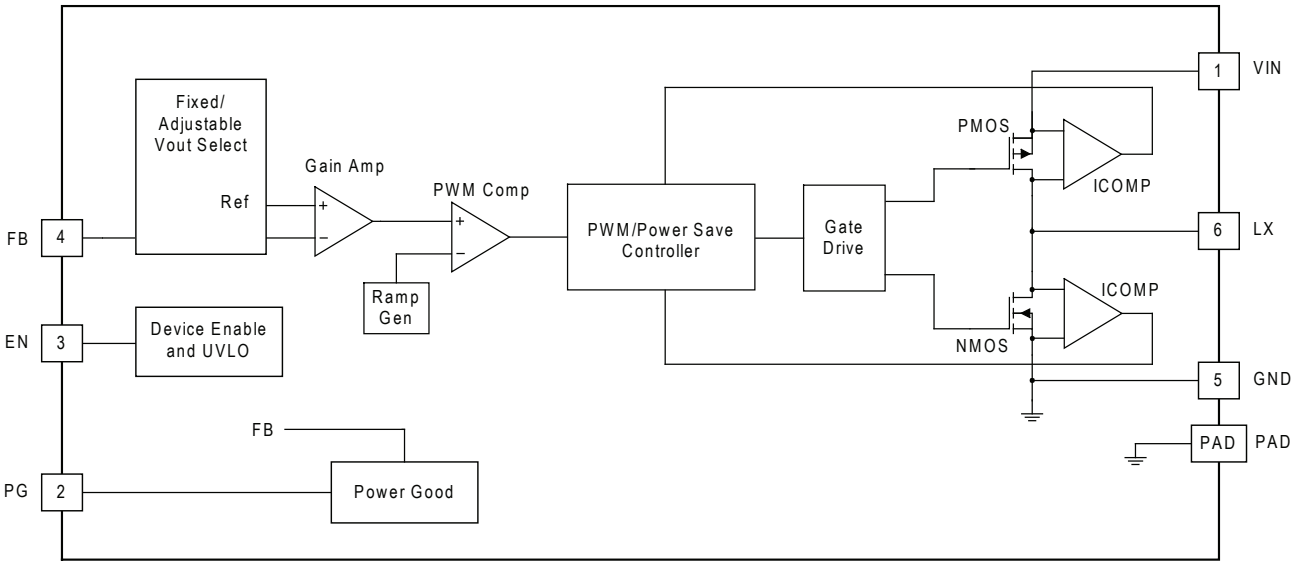

Applications Information

Synchronous Buck Converter

The SC21152 is a synchronous buck regulator that employs an adaptive on-time architecture to provide fast transient response and very small circuit area. The SC21152 operates over an input voltage range of 2.3 to 5.5V.

Operating Modes

The SC21152 operates in one of four different modes depending on the status of VIN, VOUT, and load.

PWM Adaptive On-time operation (AOT)
PWM Minimum Off-time operation (Min Off)
PFM (Pulse Frequency Modulation for Power Saving)
Drop-Out operation (LDO mode)

PWM AOT Mode Operation

During PWM AOT operation the controller uses adaptive on-time control. The FB ripple signal is routed to a gain stage and then to the internal comparator and reference which trigger the high-side pulses. The reference includes a compensation ramp which emulates the inductor current to provide stable switching.

AOT operation is used when the low-side pulse-width (off-time) is greater than the minimum 60nsec.
A switching cycle in AOT mode is as follows:

- On-time: the cycle starts with the high-side mosfet turn-on. The pulse width is set by the following formula where f_{sw} is 4MHz:

$$T_{ON} = \frac{V_{OUT}}{V_{INMAX} \times f_{SW}}$$

- Off-time: after the high-side on-time is completed, the low-side mosfet turns on to begin the off-time. The off-time pulse width is set by the internal compensation ramp and under static conditions results in typically 4MHz switching frequency.

Note that the SC21152 enters AOT operation if VIN is less than VOUT/0.88.

PWM Min Off Operation

The device will enter Minimum Off-time operation (Min Off) when VIN, VOUT, and load conditions force the off-time (time between high-side pulses) to the minimum value, typically 60nsec. This indicates that the controller has reached maximum duty cycle for AOT operation and longer duty cycles are needed.

In Min Off operation the SC21152 uses constant off-time control. As in AOT operation, the FB ripple signal is routed to a gain stage and then to the internal AOT comparator and reference. In Min Off mode, the FB ripple triggers the low-side turn-on. Min Off switching cycle operation is as follows:

- Off-time: The low-side mosfet is on for a fixed Minimum Off time of 60nsec. This draws current from the output capacitor through the inductor via the LX pin and causes the output to fall.

- On-time: after the Min Off time of 60nsec has elapsed, the high-side mosfet turns on. This helps recharge the output capacitor and bring the output voltage up. The on-time pulse width is determined by the internal compensation ramp.

Drop-out Operation

When operating in Min Off mode, the off-time is constant and the high-side on-time varies in order to regulate the output. For cases where VIN is near VOUT, the high-side will remain on continually with 100% duty cycle. The output voltage will then be limited by the input voltage, high-side RDS_{ON} and inductor DCR as shown in the following equation:

$$VOUT = VIN - ILOAD \times (RDSON + DCR)$$

Note that RDS_{ON} is a function of input voltage and temperature. Inductor DC resistance also increases with temperature.

Power Save (PFM) Operation

In PFM operation, the FB ripple signal is routed to a gain stage and compared to an internal reference. A switching cycle is as follows.

Applications Information (continued)

- On-time: The high-side mosfet turns on, as triggered by the FB signal falling to the internal reference. The high-side stays on for a predetermined time based on VIN and VOUT, then turns off.

- Off-time: the low-side mosfet turns on. Inductor current is monitored via the low-side switch. When the current falls to zero, the low-side mosfet turns off.

- Dead-time: both mosfets are off. If the FB signal is higher than the internal reference, both mosfets remain off. During the dead-time the load current is supplied by the output capacitor, causing the output and the FB signal to fall. When the FB signal falls to the 800mV threshold, the next high-side pulse begins.

As load current increases, the dead-time between pulses reduces. On any cycle, if the minimum off-time (60nsec) has elapsed and the FB signal is calling for another high-side on-time, the controller exits PFM and enters PWM operation.

Once the controller is in PWM operation, the inductor current must go below zero (go negative) for 16 switching cycles before the controller will return to PFM operation.

Soft start

The SC21152 contains an internal soft start to reduce inrush current during start-up. During start-up, the FB signal is compared to an internal ramp, providing a gradual ramp on VOUT. The timing to move VOUT from 0V to 95% of final value is typically 100usec. Optional soft start times of 200usec, 400usec, and 800usec can be provided.

Pre-bias Start-up

During start-up, the low-side mosfet turns off if the inductor current falls negative (into the LX pin) on any cycle. This prevents discharge of the output capacitor during the soft-start cycle. Note that if the output is loaded during a Pre-Bias start-up, the output voltage may fall until the internal Soft-start ramp rises above the voltage seen at the FB pin.

Power Good Indicator

The SC21152 includes a open-drain Power Good (PG) indicator. The PG output is in a logic high (open) state when the FB pin is above 95% of the final value (above 760mV). The PG threshold has 3% hysteresis to prevent chattering.

During a start-up cycle, the PG output is pulled low typically 30usec before the start of mosfet switching. The PG output stays low until the FB pin exceeds 95% of the final, which begins the PG Assert Time delay of 75µsec. After the Assert Time has passed, the PG output will drive high (open circuit). If the FB signal falls to the falling edge PG threshold, a Deassert Time delay of 13µsec must elapse before the PG output will change to logic low.

The PG pin requires a pull-up resistor to provide a logic high to a microcontroller. If the PG signal is not used at the system level, the pull-up resistor can be omitted.

Note that the PG output is high (open) when the EN pin is low. This prevents power loss in the PG pull-up resistor when the device is disabled.

VIN Under-Voltage Lockout

The SC21152 includes an under-voltage lockout (UVLO) to inhibit switching until the input voltage exceeds 2.16V. The VIN UVLO threshold has 85mV hysteresis to prevent chatter during start-up.

EN Input

The EN input is a logic level input. When EN is set to logic high, the SC21152 goes through an internal reset to prepare for operation. The soft-start ramp and mosfet switching begin typically 50µsec after EN is driven high.

When EN is low (grounded), the SC21152 is off and in its lowest power state. The power mosfets are off and the PG output is high (open). The automatic discharge mosfet on LX is on to discharge the output before the next start-up cycle.

Automatic Discharge

When the EN pin is pulled low (grounded), the power mosfets are tri-stated and the LX pin is connected to GND through an internal mosfet to discharge the output capacitors. Typical mosfet RDS_{ON} is 40 ohms at 5V and

Applications Information (continued)

25°C. Note that RDS_{ON} is a function of both VIN and temperature.

The automatic discharge feature can optionally be disabled from the device.

Over-current Protection

The SC21152 provides overload protection through pulse by pulse current limiting. During the high-side on-time, the high-side switches off if the inductor current exceeds 2.2A typically. The low-side turns on briefly, followed by the next high-side on-time. Switching continues while the output overload exists. When the overload is removed, the SC21152 will resume normal operation. If the overload causes high junction temperature, the SC21152 will go into Over-temperature protection.

Over-temperature Protection

The SC21152 will shut down if the junction temperature exceeds typically 160 °C. The device will automatically restart after the junction temperature has dropped typically 10 °C.

Component Selection

The SC21152 is optimized for use with components as shown in the Detailed Applications Circuit on page 10.

Inductor: the inductor should be 0.47uH and capable of supporting a minimum current of 1.2A.

Input capacitor: ceramic capacitor, minimum 4.7uF, X5R or X7R or better dielectric.

Output capacitor: ceramic capacitor, minimum 10uF, X5R or X7R or better dielectric.

Note when operating in Min Off mode, higher output capacitance may needed to reduce output ripple when VIN approaches VOUT.

The FB components provide output voltage sensing and feedback compensation to regulate the output. The output voltage is programmed using two resistor along with a compensation capacitor.

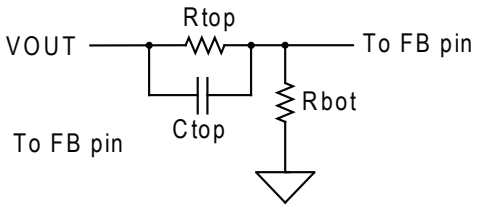

The FB regulation setpoint is 800mV. The output voltage can be calculated as shown.

$$V_{OUT} = 0.8 \times \left(1 + \frac{Rtop}{Rbot}\right)$$

The FB resistor values can be calculated as shown. It is recommended to use 100kΩ for Rbot to minimize power loss in the FB network.

$$Rtop = \frac{(VOUT - 0.8V) \times Rbot}{0.8V}$$

The optimum value for Ctop is 22pF.

PCB Layout Guidelines

An optimum layout for the SC21152 is shown below. When doing the PCB layout the following guidelines should be used:

The input capacitor must be located as close as possible to the IC and directly connected to pin 1 (VIN), pin 5 (GND), and PAD (GND).

The LX trace from pin 6 to the inductor should be as short as possible, and wide to reduce IR loss and improve heat dissipation.

The output capacitor should be close to the inductor. The feedback components (Rtop, Ctop, Rbot, for adjustable VOUT) should be located as close as possible to the FB pin. For fixed VOUT, the output capacitor connects directly to the FB pin.

The FB trace should be short and not routed near noise signals. Do not route the FB trace under the inductor; the high impedance of the FB circuit can pick up noise from the inductor's magnetic field.

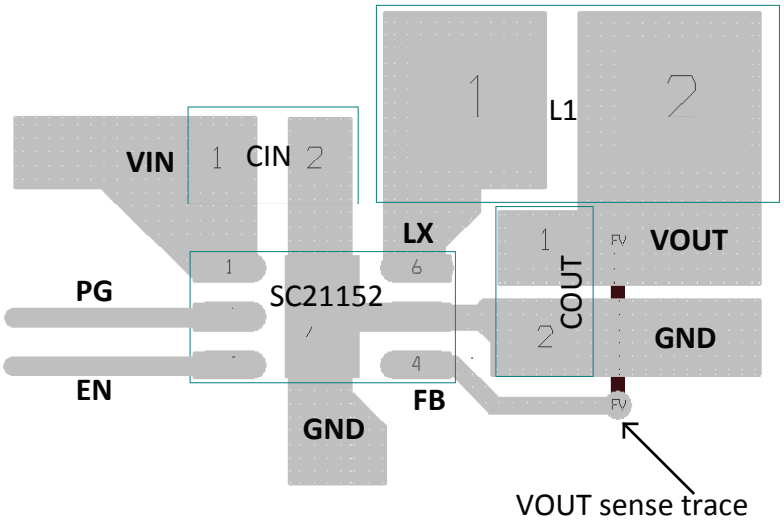

PCB Layout - Fixed VOUT

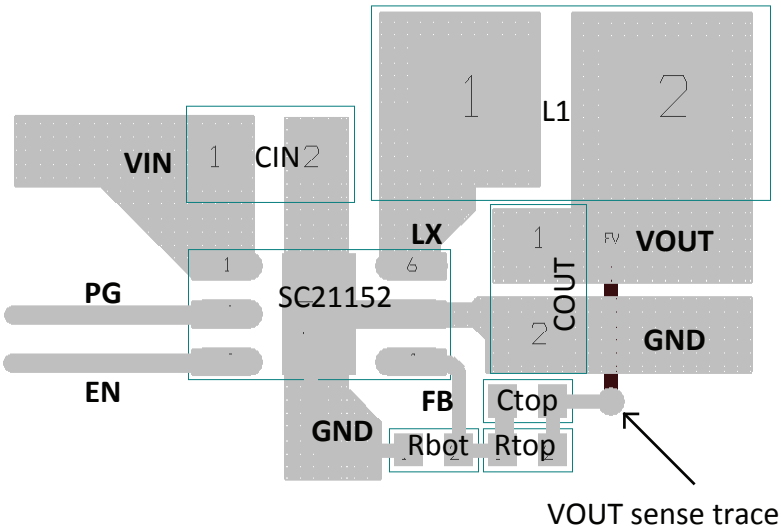

PCB Layout - Adjustable VOUT

Outline Drawing — 1.5 x 2mm 6-lead MLPD

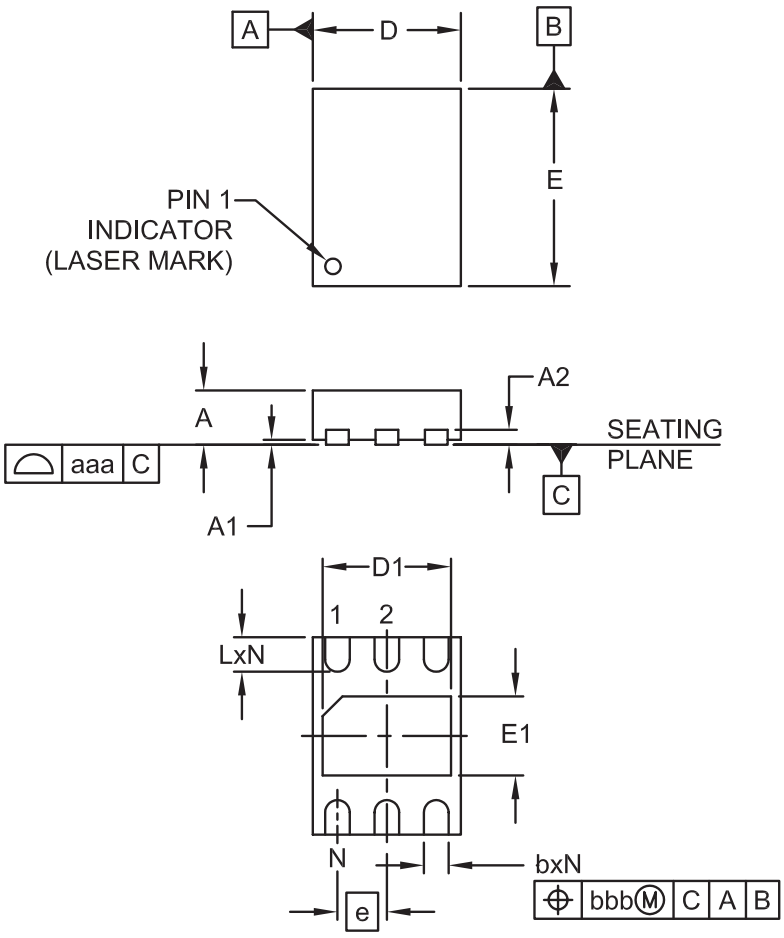

DIMENSIONS						
DIM	INCHES			MILLIMETERS		
	MIN	NOM	MAX	MIN	NOM	MAX
A	.020	-	.024	0.50	-	0.60
A1	.000	-	.002	0.00	-	0.05
A2		(.006)			(.152)	
b	.007	.010	.012	0.18	0.25	0.30
D	.055	.059	.063	1.40	1.50	1.60
D1	.035	-	.055	0.90	-	1.40
E	.075	.079	.083	1.90	2.00	2.10
E1	.026	.031	.035	0.65	0.80	0.90
e		.020 BSC			0.50 BSC	
L	.012	.014	.016	0.30	0.35	0.40
N		6			6	
aaa		.003			0.08	
bbb		.004			0.10	

NOTES:

1. CONTROLLING DIMENSIONS ARE IN MILLIMETERS (ANGLES IN DEGREES).
2. COPLANARITY APPLIES TO THE EXPOSED PAD AS WELL AS TERMINALS.

SEMTECH

Land Pattern — 1.5x2mm 6-lead MLPD

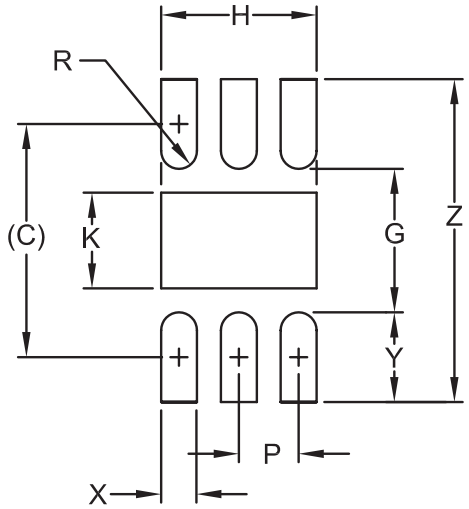

DIMENSIONS		
DIM	INCHES	MILLIMETERS
C	(.077)	(1.95)
G	.047	1.20
H	.051	1.30
K	.031	0.80
P	.020	0.50
R	.006	0.15
X	.012	0.30
Y	.030	0.75
Z	.106	2.70

NOTES:

1. CONTROLLING DIMENSIONS ARE IN MILLIMETERS (ANGLES IN DEGREES).
2. THIS LAND PATTERN IS FOR REFERENCE PURPOSES ONLY. CONSULT YOUR MANUFACTURING GROUP TO ENSURE YOUR COMPANY'S MANUFACTURING GUIDELINES ARE MET.
3. THERMAL VIAS IN THE LAND PATTERN OF THE EXPOSED PAD SHALL BE CONNECTED TO A SYSTEM GROUND PLANE. FAILURE TO DO SO MAY COMPROMISE THE THERMAL AND/OR FUNCTIONAL PERFORMANCE OF THE DEVICE.

©Semtech 2015

All rights reserved. Reproduction in whole or in part is prohibited without the prior written consent of the copyright owner. The information presented in this document does not form part of any quotation or contract, is believed to be accurate and reliable and may be changed without notice. No liability will be accepted by the publisher for any consequence of its use. Publication thereof does not convey nor imply any license under patent or other industrial or intellectual property rights. Semtech assumes no responsibility or liability whatsoever for any failure or unexpected operation resulting from misuse, neglect improper installation, repair or improper handling or unusual physical or electrical stress including, but not limited to, exposure to parameters beyond the specified maximum ratings or operation outside the specified range.

SEMTECH PRODUCTS ARE NOT DESIGNED, INTENDED, AUTHORIZED OR WARRANTED TO BE SUITABLE FOR USE IN LIFE-SUPPORT APPLICATIONS, DEVICES OR SYSTEMS OR OTHER CRITICAL APPLICATIONS. INCLUSION OF SEMTECH PRODUCTS IN SUCH APPLICATIONS IS UNDERSTOOD TO BE UNDERTAKEN SOLELY AT THE CUSTOMER'S OWN RISK. Should a customer purchase or use Semtech products for any such unauthorized application, the customer shall indemnify and hold Semtech and its officers, employees, subsidiaries, affiliates, and distributors harmless against all claims, costs damages and attorney fees which could arise.

Notice: All referenced brands, product names, service names and trademarks are the property of their respective owners.

Contact Information

Semtech Corporation
Power Management Products Division
200 Flynn Road, Camarillo, CA 93012
Phone: (805) 498-2111 Fax: (805) 498-3804

www.semtech.com