PRELIMINARY - September 11, 2000 TEL:805-498-2111 FAX:805-498-3804 WEB:http://www.semtech.com

DESCRIPTION

The SC1563 is a high performance positive voltage regulator designed for use in applications requiring very low dropout voltage at up to 500 milliamps. Since it has superior dropout characteristics compared to regular LDOs, it can be used to supply 2.5V on motherboards or 2.8V on peripheral cards from the 3.3V supply with no heatsink. Additionally, the SC1563 has a shutdown pin, to further reduce power dissipation while shut down. The SC1563 provides excellent regulation over variations in line, load and temperature.

The SC1563 is available as a five terminal fixed or adjustable output voltage device with enable. The device is available in a 5-pin SOT-23 package and an 8-pin MSOP package for higher power dissipation/ lower junction temperature.

FEATURES

- 450mV dropout @ 500mA
- Designed to operate with ceramic capacitors
- Adjustable output from 1.200V to 3.3V
- Multiple output voltage options (all parts also adjustable externally using resistors)
- Over current and over temperature protection
- Enable pin
- 1µA quiescent current in shutdown
- Low reverse leakage (output to input)
- Full industrial temperature range

APPLICATIONS

- Battery powered systems
- Motherboards
- Peripheral cards
- PCMCIA cards

ORDERING INFORMATION

DEVICE(1)(2)(3)	PACKAGE
SC1563ISK-X.XTR	SOT-23-5L
SC1563IMS-X.XTR	MSOP-8

Notes:
(1) Where -X.X denotes voltage options. Available voltages are: 1.8V, 2.5V, 2.8V, 3.0V, 3.1V and 3.3V.
(2) Output voltage can be adjusted using external resistors, see Pin Description.
(3) Only available in tape and reel packaging. A reel contains 2500 devices (MSOP-8) or 3000 devices (SOT-23-5L).

TYPICAL APPLICATION

Internally Preset Output Voltage

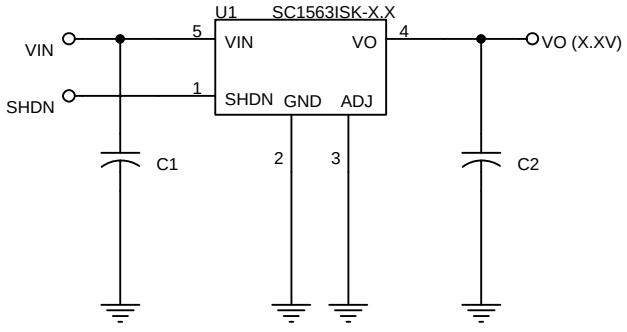

Externally Set Output Voltage

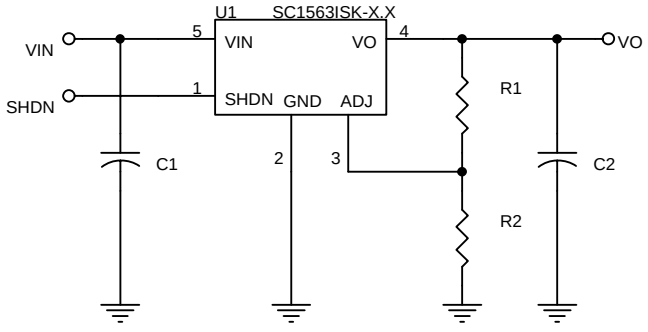

$$VO = \frac{1.200\ (R1 + R2)}{R2} \text{ Volts}$$

© 2000 SEMTECH CORP.

PRELIMINARY - September 11, 2000

ABSOLUTE MAXIMUM RATINGS

Parameter	Symbol	Maximum	Units
Input Voltage	V_{IN}	5.5	V
Power Dissipation	P_D	Internally Limited	W
Thermal Resistance Junction to Ambient MSOP-8(1) MSOP-8(2) SOT-23-5L(1)	θ_{JA}	 206 95 256	°C/W
Thermal Resistance Junction to Case MSOP-8 SOT-23-5L	θ_{JC}	 39 81	°C/W
Operating Ambient Temperature Range	T_A	-40 to+85	°C
Operating Junction Temperature Range	T_J	-40 to 150	°C
Storage Temperature Range	T_{STG}	-65 to 150	°C
Lead Temperature (Soldering) 10 Sec.	T_{LEAD}	300	°C
ESD Rating	ESD	2	kV

Notes:
(1) Minimum pad size.
(2) 1 square inch of FR-4, double sided, 1oz. minimum copper weight.

ELECTRICAL CHARACTERISTICS

Unless specified: V_{SHDN} = 0V
Adjustable Option ($V_{ADJ} > V_{TH(ADJ)}$): V_{IN} = 2.2 to 5.5V and I_O = 10µA to 500mA
Fixed Options (V_{ADJ} = GND): V_{IN} = (V_O + 0.7V) to 5.5V and I_O = 0A to 500mA
Values in **bold** apply over the full operating temperature range.

Parameter	Symbol	Test Conditions	Min	Typ	Max	Units
VIN						
Supply Voltage Range	VIN		**2.2**		**5.5**	V
Quiescent Current	I_Q	V_{IN} = 3.3V		100	**150**	µA
		V_{IN} = 5.5V, V_{SHDN} = Open		0.5	**2**	µA
VO						
Output Voltage(1)	V_O	V_{IN} = V_O + 0.7V, I_O = 10mA	0.99V_O	V_O	1.01V_O	V
(Internal Fixed Voltage)			**0.98V_O**	**V_O**	**1.02V_O**	
Line Regulation(1)	$REG_{(LINE)}$	V_{IN} = (V_O + 0.25V) to 5.5V, I_{OUT} = 10mA		0.035	**0.3**	%
Load Regulation(1)	$REG_{(LOAD)}$	V_{IN} = V_O + 0.7V		0.2	**0.4**	%

© 2000 SEMTECH CORP.

PRELIMINARY - September 11, 2000

ELECTRICAL CHARACTERISTICS (Cont.)

Unless specified: V_{SHDN} = 0V
Adjustable Option ($V_{ADJ} > V_{TH(ADJ)}$): V_{IN} = 2.2 to 5.5V and I_O = 10µA to 500mA
Fixed Options (V_{ADJ} = GND): V_{IN} = (V_O + 0.7V) to 5.5V and I_O = 0A to 500mA
Values in **bold** apply over the full operating temperature range.

Parameter	Symbol	Test Conditions	Min	Typ	Max	Units
VO (Cont.)						
Dropout Voltage[2]	V_D	I_{LOAD} = 2mA		1	5	mV
					10	
		I_{LOAD} = 100mA		75	100	mV
					150	
		I_{LOAD} = 250mA		200	300	mV
					400	
		I_{LOAD} = 500mA		450	550	mV
					700	
Minimum Load Current[3]	I_O	$V_{IN} = V_O$ + 0.7V		1	**10**	µA
Current Limit	I_{CL}		**0.50**		**1.00**	A
ADJ						
Reference Voltage[1]	V_{REF}	V_{IN} = 2.2V, $V_{ADJ} = V_{OUT}$, I_O = 10mA	1.188	1.200	1.212	V
			1.176		**1.224**	
Adjust Pin Current[4]	I_{ADJ}	$V_{ADJ} = V_{REF}$		50	**100**	nA
Adjust Pin Threshold[5]	$V_{TH(ADJ)}$		**0.10**	0.20	**0.40**	V
SHDN						
Shutdown Pin Current	I_{SHDN}	V_{SHDN} = 0V, V_{IN} = 3.3V		1	**10**	µA
Shutdown Pin Threshold	V_{IH}	V_{IN} = 3.3V	**1.8**			V
	V_{IL}	V_{IN} = 3.3V			**0.4**	
OVER TEMPERATURE PROTECTION						
High Trip Level	T_{HI}			165		°C
Hysteresis	T_{HYST}			10		°C

NOTES:
(1) Low duty cycle pulse testing with Kelvin connections required.
(2) Defined as the input to output differential at which the output voltage drops to 1% below the value measured at a differential of 0.7V.
(3) Required to maintain regulation. Voltage set resistors R1 and R2 are usually utilized to meet this requirement. Adjustable versions only.
(4) Guaranteed by design.
(5) When V_{ADJ} exceeds this threshold, the "Sense Select" switch disconnects the internal feedback chain from the error amplifier and connects V_{ADJ} instead.

© 2000 SEMTECH CORP.

PRELIMINARY - September 11, 2000

BLOCK DIAGRAM

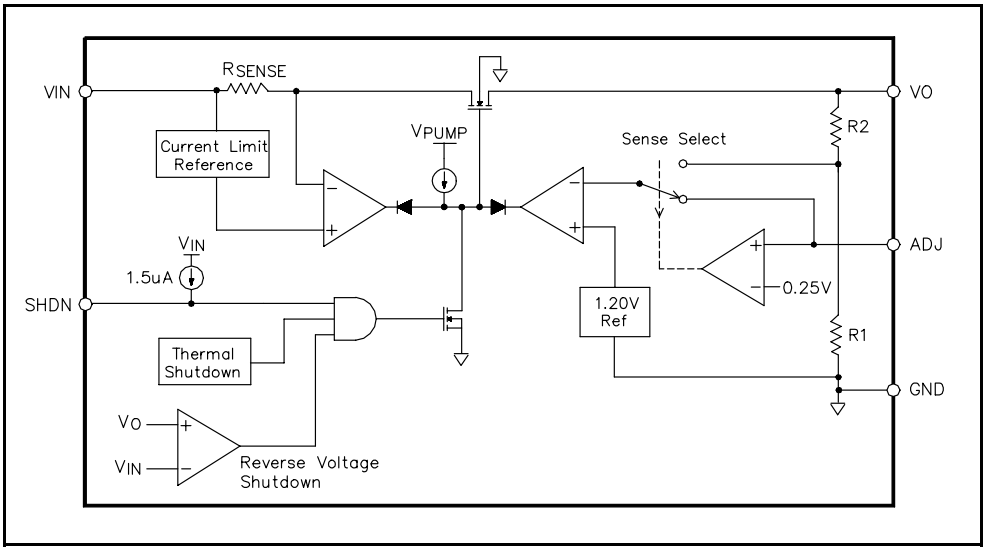

PIN CONFIGURATIONS

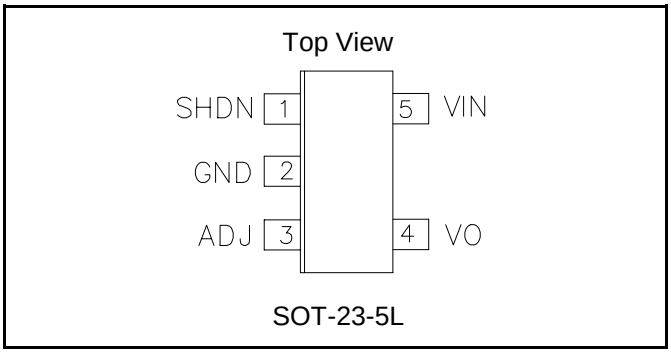

SOT-23-5L

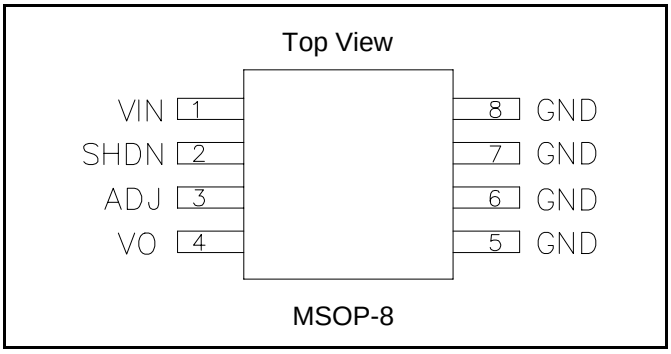

MSOP-8

PIN DESCRIPTION

Pin Name	Pin Number		Pin Function
	SOT-23-5L	MSOP-8	
ADJ	3	3	This pin, when grounded, sets the output voltage to that set by the internal feedback resistors. If external feedback resistors are used, the output voltage will be (See Application Circuit): $VO = \frac{1.200(R1+R2)}{R2}$ Volts
GND	2	5-8	Reference ground. Connect all MSOP-8 GND pins. These pins may be used for heatsinking purposes.
VIN	5	1	Input voltage. For regulation at full load, the input to this pin must be between (VO + 0.7V) to 5.5V. Minimum VIN = 2.2V.
VO	4	4	This pin is the power output of this device.
SHDN	1	2	Shutdown Input. Leaving this pin open turns the regulator off, reducing the quiescent current to a fraction of its operating value (typically <100nA). The device will be enabled if this pin is pulled below 0.4V. Connect to GND if not being used.

© 2000 SEMTECH CORP.

PRELIMINARY - September 11, 2000

TYPICAL APPLICATION (Externally Set Output Voltage)[1][2]

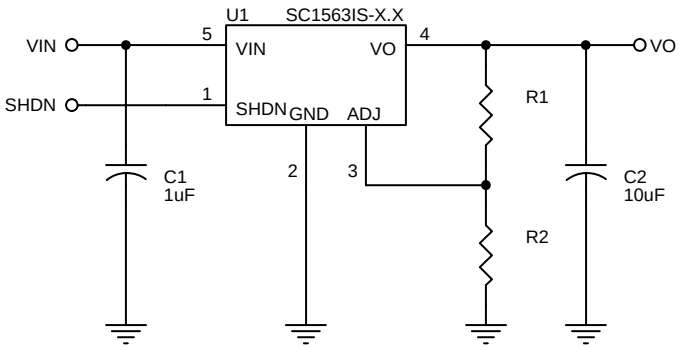

$$VO = \frac{1.200\ (R1+R2)}{R2} \text{ Volts}$$

TYPICAL APPLICATIONS (Internally Set Output Voltage)[2]

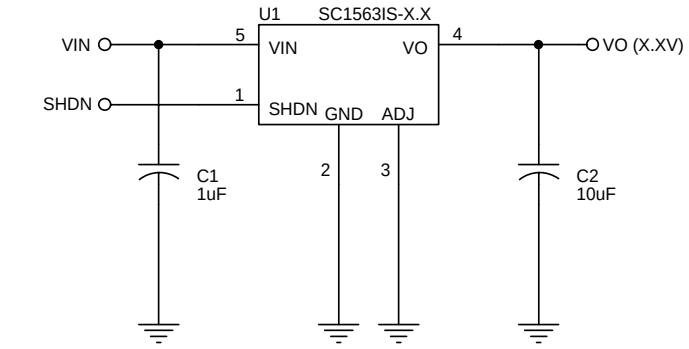

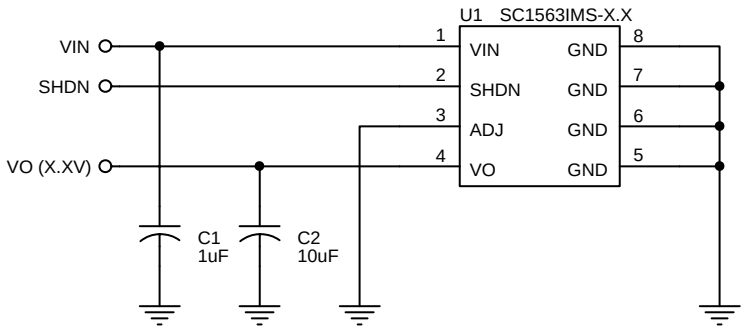

Notes:
(1) Maximum VO setpoint is 3.3V.
(2) This device is designed to operate with ceramic input and output capacitors.

© 2000 SEMTECH CORP.

PRELIMINARY - September 11, 2000

APPLICATIONS INFORMATION

Introduction
The SC1563 is intended for applications such as graphics cards where high current capability and very low dropout voltage are required. It provides a very simple, low cost solution that uses little pcb real estate and typically does not require a heatsink. Additional features include an enable pin to allow for a very low power consumption standby mode, and a fully adjustable output.

Component Selection
Input capacitor - a 1µF ceramic capacitor is recommended. This allows for the device being some distance from any bulk capacitance on the rail. Additionally, input droop due to load transients is reduced, improving load transient response. Additional capacitance may be added if required by the application.

Output capacitor - a minimum bulk capacitance of 1µF, along with a 0.1µF ceramic decoupling capacitor is recommended. Increasing the bulk capacitance will improve the overall transient response. The use of multiple lower value ceramic capacitors in parallel to achieve the desired bulk capacitance will not cause stability issues. Although designed for use with ceramic output capacitors, the SC1563 is extremely tolerant of output capacitor ESR values and thus will also work comfortably with tantalum output capacitors.

External voltage selection resistors - the use of 1% resistors, and designing for a current flow ≥ 10µA is recommended to ensure a well regulated output (thus R2 ≤ 120kΩ).

Thermal Considerations
The power dissipation in the SC1563 is approximately equal to the product of the output current and the input to output voltage differential:

$$P_D \approx (VIN - VOUT) \bullet I_O$$

The absolute worst-case dissipation is given by:

$$P_{D(MAX)} = (VIN_{(MAX)} - VOUT_{(MIN)}) \bullet I_{O(MAX)} + VIN_{(MAX)} \bullet I_{Q(MAX)}$$

For a typical scenario, VIN = 3.3V ± 5%, VOUT = 2.5V and I_O = 500mA, therefore:

$VIN_{(MAX)}$ = 3.465V, $VOUT_{(MIN)}$ = 2.450V and $I_{Q(MAX)}$ = 1.75mA,

Thus $P_{D(MAX)}$ = 0.514W.
Using this figure, and assuming $T_{A(MAX)}$ = 85°C, we can calculate the maximum thermal impedance allowable to maintain $T_J \leq 150°C$:

$$R_{TH(J-A)(MAX)} = \frac{(T_{J(MAX)} - T_{A(MAX)})}{P_{D(MAX)}} = \frac{(150 - 70)}{0.514} = 156\,°C/W$$

This should be achievable using pcb copper area to aid in conducting the heat away from the device. Internal ground/power planes and air flow will also assist in removing heat. For higher ambient temperatures additional board copper may be required. Use of the available MSOP-8 package will allow operation at full load where higher input to output voltage differentials exist.

MARKING INFORMATION

MSOP-8

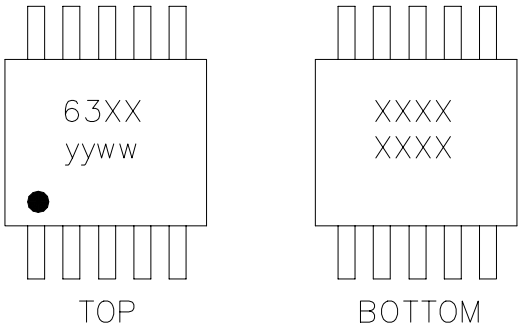

SOT-23-5L

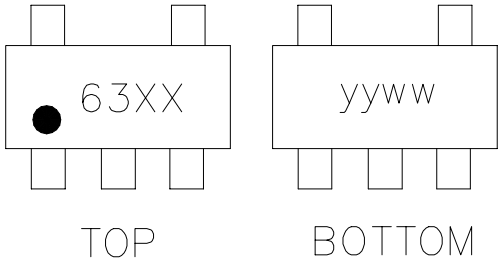

63XX = SC1563, voltage option (example: 6318)
yyww = Datecode (example: 0008)
XXXX = Lot number (example: E01102)

© 2000 SEMTECH CORP.

PRELIMINARY - September 11, 2000

DEVICE OUTLINE - SOT-23-5

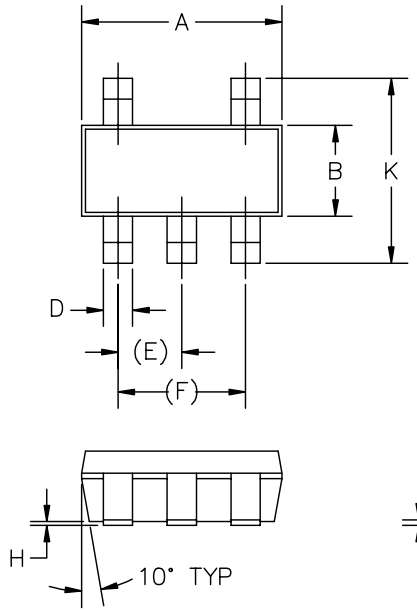

DIMENSIONS					
DIMᴺ	INCHES		MM [1]		NOTE
	MIN	MAX	MIN	MAX	
A	.110	.120	2.80	3.05	–
B	.059	.070	1.50	1.75	–
C	.036	.051	.90	1.30	–
D	.014	.020	.35	.50	–
E	–	.037	–	0.95	REF
F	–	.075	–	1.90	REF
H	–	.006	–	.150	–
J	.0035	.008	.090	.20	–
K	.102	.118	2.6	3.00	–

[1] CONTROLLING DIMENSIONS: MILLIMETERS.

LAND PATTERN - SOT-23-5

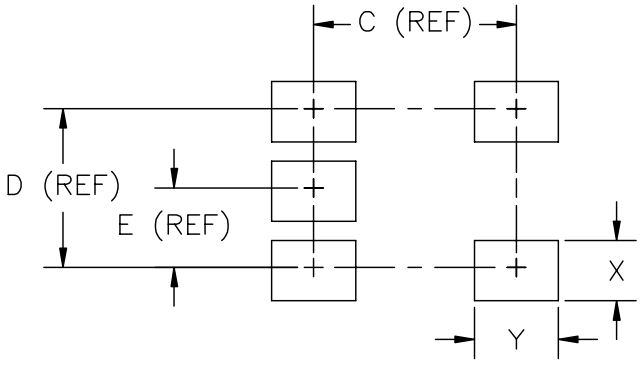

DIMENSIONS			
DIMᴺ	INCHES	MM	NOTE
C	.094	2.4	–
D	.074	1.9	–
E	.037	.95	–
X	.028	.7	–
Y	.039	1.0	–

© 2000 SEMTECH CORP.

PRELIMINARY - September 11, 2000

OUTLINE DRAWING - MSOP-8

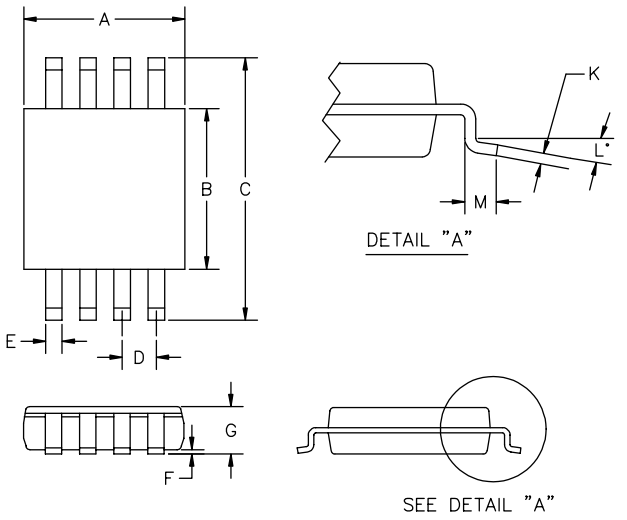

DIMENSIONS					
DIM	INCHES		MM		NOTE
	MIN	MAX	MIN	MAX	
A	.114	.122	2.90	3.10	
B	.114	.122	2.90	3.10	
C	.187	.199	4.75	5.05	
D	.025 BSC		.65 BSC		
E	.010	.016	.25	.40	
F	.002	.006	.05	.15	
G	–	.043	–	1.10	
K	.005	.009	.13	.23	
L	0°	6°	0°	6°	
M	.016	.028	.40	.70	

[2] PACKAGE OUTLINE EXCLUSIVE OF MOLD FLASH AND METAL BURR.
[1] CONTROLLING DIMENSIONS: MILLIMETERS.

LAND PATTERN - MSOP-8

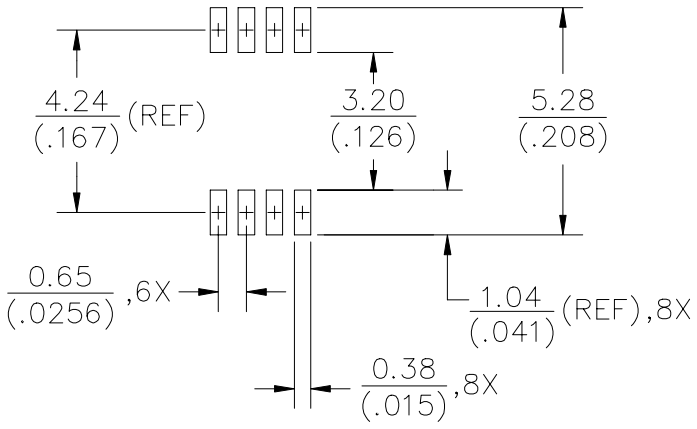

[1] DIMENSIONS ARE IN MILLIMETERS (INCHES).

ECN00-1343

© 2000 SEMTECH CORP.