SC-362M series

DIN 72 x72 COUNTER & METER

CE

☆**Counter**

—Single phase Input .
—Decimal Point Selectable .
—Dual Preset Counter .
—Divisor Range：1 ~ 9999
—Multiplier Range：0.001 ~9.999
—Increasement Counter or
Decreasement Counter Selectable .

☆**RPM or Line Speed Meter**

—Pulses per Revolution Settable
.—Sampling Time Settable .
—Decimal Point Auto Shift .



Specification

Type	Counter & RPM	Counter & Line Speed Meter
Model	SC-362M	SC-362Ma
Power Supply	110V / 220VAC ±20% , 50Hz	
DC Power Output	12VDC / 60mA Max.	
Unit	Revolutions per Minute	Meter per Minute
Sampling Time(S.T.)	1 ~ 99 Sec Settable	
Pules Per Revolution(PPR)	1 ~ 999 PPR Settable	
Decimal Point	Auto Shift	
Output Control	N / R / C Selectable , Range of Timer (t)：0.01S ~99.99S	
Response Frequence	High Speed < 2.5K Hz ; Low Speed < 30Hz	
Divisor / Multiplier	Divisor Range：1 ~ 9999 / Multiplier Range：0.001 ~ 9.999	
Memory Method	EEP ROM	
ESD Resistance	Over 8KV	
Dielectric Strength	Over 2.5 KV / 1 min , Between Power And Each Terminal	
Isolation Strength	Over 500MΩ/500VDC , Between Power And Each Terminal	
Operating Temp./Hum.	-20˚C ~ +80˚C ; 35 ~ 85% RH	
Weight		

Connection Diagram & Dimension

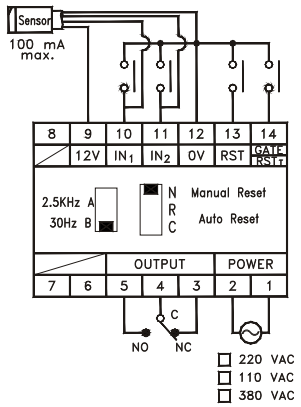

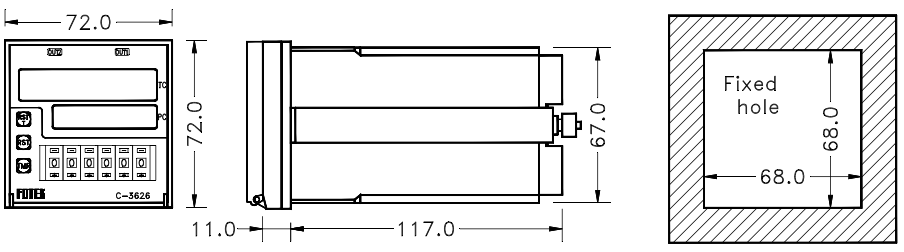

Setting of Parameter

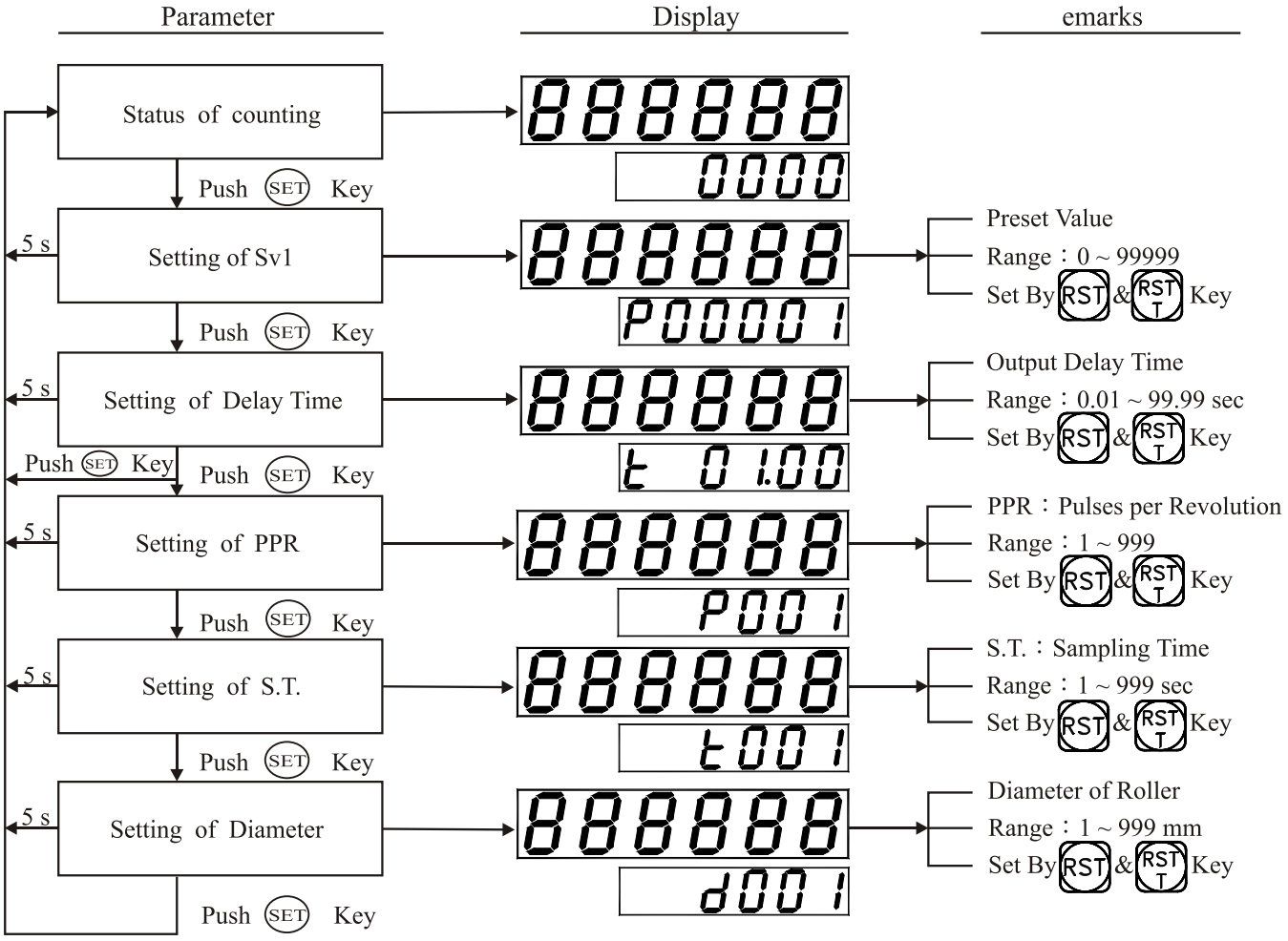

N / R / C Output Control

Single Preset Counter

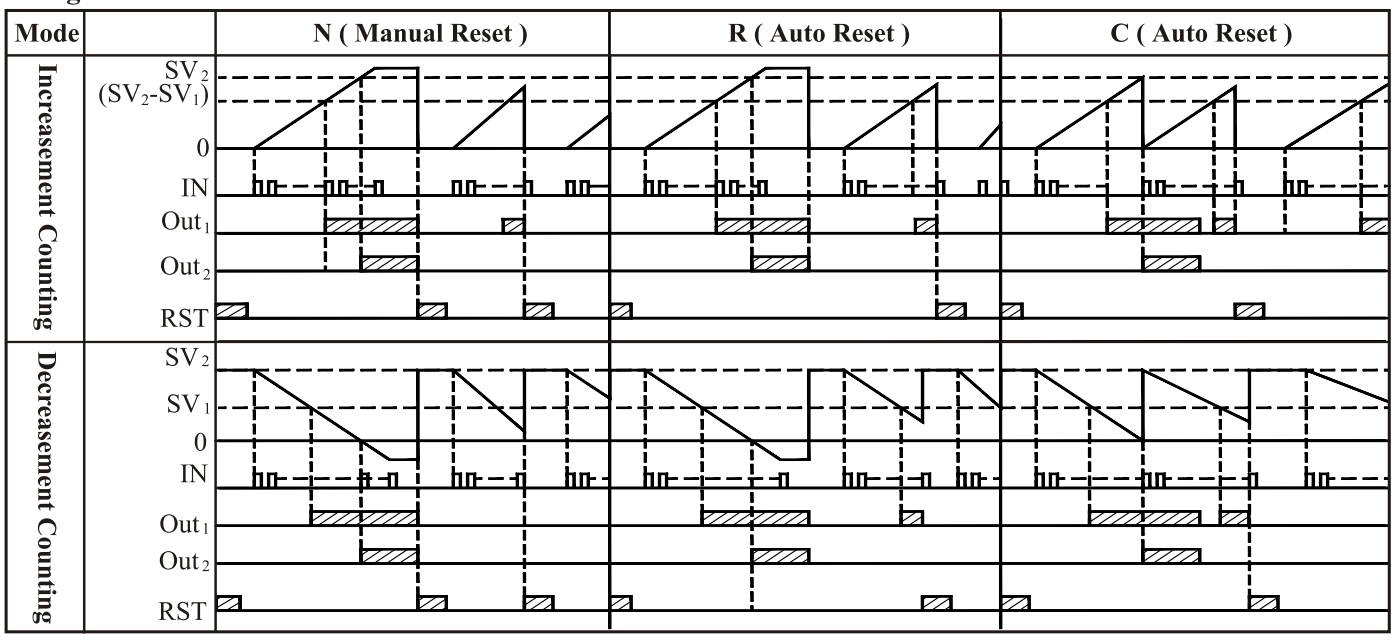

Remarks : SV_2 is Main Preset Value.