SBR30A120CT
SBR30A120CTFP

30A SBR®
SUPER BARRIER RECTIFIER

Features

- Low Forward Voltage Drop
- Excellent High Temperature Stability
- Patented Super Barrier Rectifier Technology
- Soft, Fast Switching Capability
- 175ºC Operating Junction Temperature
- **Lead-Free Finish; RoHS Compliant (Notes 1 & 2)**
- **Also Available in Green Molding Compound (Note 4)**
  - **Halogen and Antimony Free. "Green" Device (Note 3)**

Mechanical Data

- Case: TO-220AB, ITO-220AB
- Case Material: Molded Plastic, UL Flammability Classification Rating 94V-0
- Terminals: Matte Tin Finish annealed over Copper leadframe. Solderable per MIL-STD-202, Method 208 e3
- Weight: TO-220AB – 1.85 grams (approximate)
  ITO-220AB – 1.65 grams (approximate)

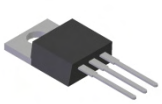

TO-220AB
Top View

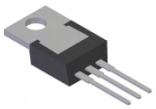

TO-220AB
Bottom View

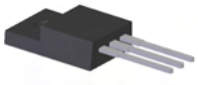

ITO-220AB
Top View

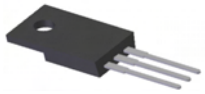

ITO-220AB
Bottom View

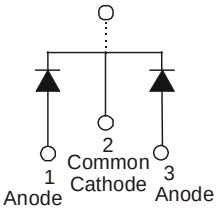

Package Pin Out
Configuration

Ordering Information (Notes 4 and 5)

Part Number	Case	Packaging
SBR30A120CT	TO-220AB	50 pieces/tube
SBR30A120CT-G	TO-220AB	50 pieces/tube
SBR30A120CTFP	ITO-220AB	50 pieces/tube
SBR30A120CTFP-G	ITO-220AB	50 pieces/tube
SBR30A120CTFP-JT	ITO-220AB (Alternate)	50 pieces/tube
SBR30A120CTFP-JT-G	ITO-220AB (Alternate)	50 pieces/tube

Notes:
1. EU Directive 2002/95/EC (RoHS) & 2011/65/EU (RoHS 2) compliant. All applicable RoHS exemptions applied.
2. See http://www.diodes.com for more information about Diodes Incorporated's definitions of Halogen- and Antimony-free, "Green" and Lead-free.
3. Halogen- and Antimony-free "Green" products are defined as those which contain <900ppm bromine, <900ppm chlorine (<1500ppm total Br + Cl) and <1000ppm antimony compounds.
4. For Green Molding Compound version part numbers, add "-G" suffix to part number above. Examples: SBR30A120CT-G.
5. For packaging details, go to our website at http://www.diodes.com.

Marking Information

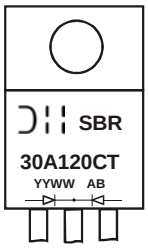

SBR30A120CT = Product Type Marking Code
AB = Foundry and Assembly Code
YYWW = Date Code Marking
YY = Last two digits of year (ex: 07 = 2007)
WW = Week (01 - 53)



SBR30A120CTFP = Product Type Marking Code
AB = Foundry and Assembly Code
YYWW = Date Code Marking
YY = Last two digits of year (ex: 07 = 2007)
WW = Week (01 - 53)

SBR is a registered trademark of Diodes Incorporated.

© Diodes Incorporated

Maximum Ratings (Per Leg) (@T_A = +25°C, unless otherwise specified.)

Single phase, half wave, 60Hz, resistive or inductive load.
For capacitance load, derate current by 20%.

Characteristic		Symbol	Value	Unit
Peak Repetitive Reverse Voltage Working Peak Reverse Voltage DC Blocking Voltage		V_{RRM} V_{RWM} V_{RM}	120	V
Average Rectified Output Current Per Device	(Per Leg) (Total)	I_O	15 30	A
Non-Repetitive Peak Forward Surge Current 8.3ms Single Half Sine-Wave Superimposed on Rated Load		I_{FSM}	250	A
Peak Repetitive Reverse Surge Current (2µS - 1Khz)		I_{RRM}	3	A
Isolation Voltage (ITO-220AB Only) From terminal to heatsink t = 3 sec.		V_{AC}	2000	V

Thermal Characteristics (Per Leg)

Characteristic	Symbol	Value	Unit
Typical Thermal Resistance Package = TO-220AB Package = ITO-220AB	$R_{\theta JC}$	 2 4	ºC/W
Operating and Storage Temperature Range	T_J, T_{STG}	-65 to +175	ºC

Electrical Characteristics (Per Leg) (@T_A = +25°C, unless otherwise specified.)

Characteristic	Symbol	Min	Typ	Max	Unit	Test Condition
Forward Voltage Drop	V_F	-	0.78 0.65 0.90	0.83 0.68 0.95	V	I_F = 15A, T_J = +25ºC I_F = 15A, T_J = +125ºC I_F = 30A, T_J = +25ºC
Leakage Current (Note 6)	I_R	-	22 5	100 20	µA mA	V_R = 120V, T_J = +25ºC V_R = 120V, T_J = +125ºC

Notes: 6. Short duration pulse test used to minimize self-heating effect.

© Diodes Incorporated

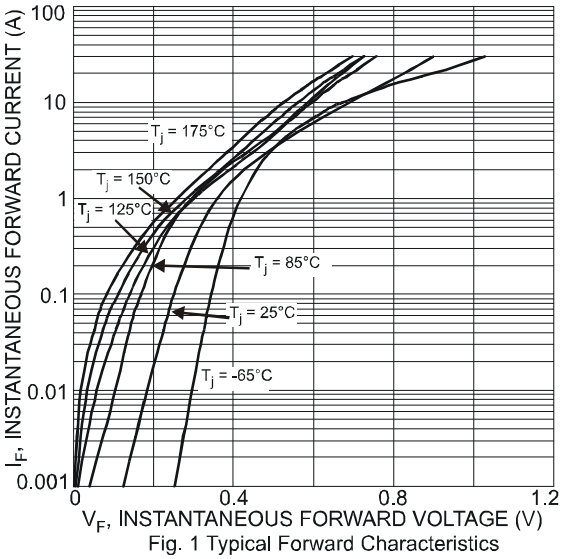

Fig. 1 Typical Forward Characteristics

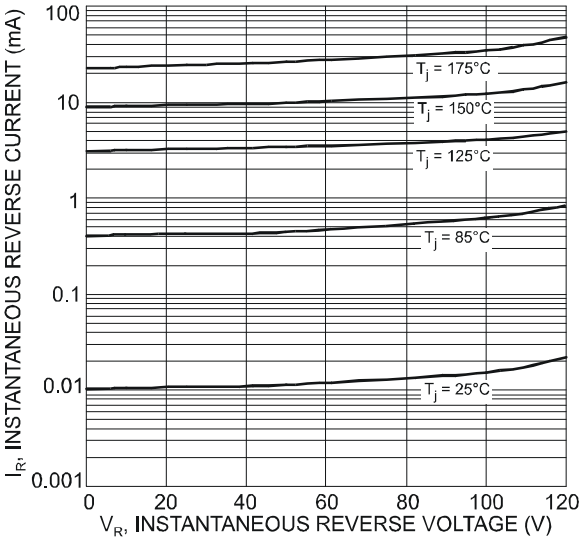

Fig. 2 Typical Reverse Characteristics

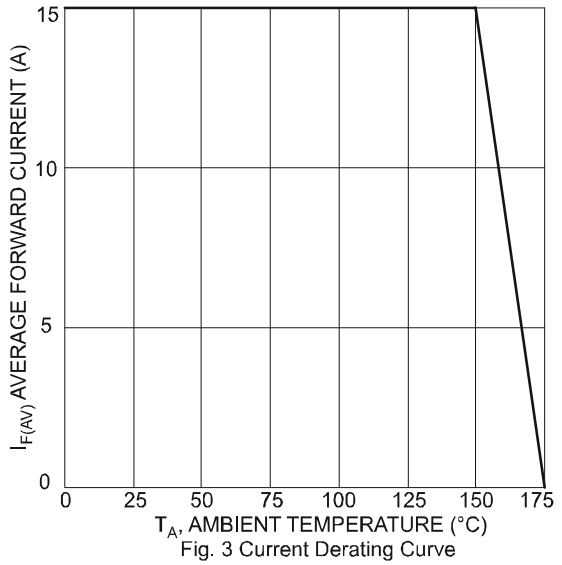

Fig. 3 Current Derating Curve

© Diodes Incorporated

Package Outline Dimensions

Please see AP02002 at http://www.diodes.com/datasheets/ap02002.pdf for latest version.

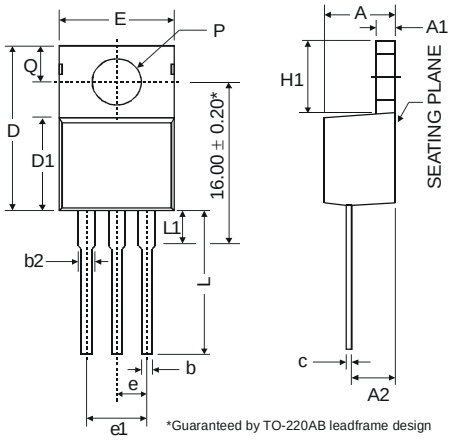

TO-220AB			
Dim	Min	Typ	Max
A	3.56	-	4.82
A1	0.51	-	1.39
A2	2.04	-	2.92
b	0.39	0.81	1.01
b2	1.15	1.24	1.77
c	0.356	-	0.61
D	14.22	-	16.51
D1	8.39	-	9.01
e	2.54		
e1	5.08		
E	9.66	-	10.66
H1	5.85	-	6.85
L	12.70	-	14.73
L1	-	-	6.35
P	3.54	-	4.08
Q	2.54	-	3.42
All Dimensions in mm			

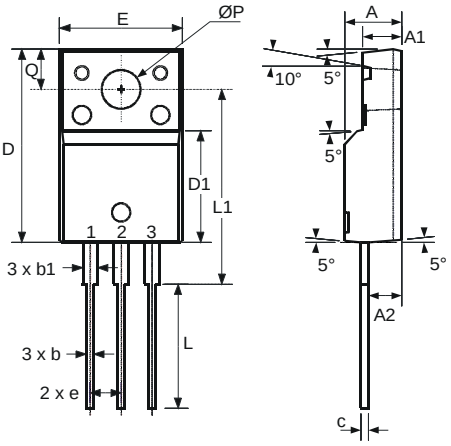

ITO-220AB (Note 8)			
Dim	Min	Typ	Max
A	4.50	4.70	4.90
A1	3.04	3.24	3.44
A2	2.56	2.76	2.96
b	0.50	0.60	0.75
b1	1.10	1.20	1.35
c	0.50	0.60	0.70
D	15.67	15.87	16.07
D1	8.99	9.19	9.39
e	2.54		
E	9.91	10.11	10.31
L	9.45	9.75	10.05
L1	15.80	16.00	16.20
P	2.98	3.18	3.38
Q	3.10	3.30	3.50
All Dimensions in mm			

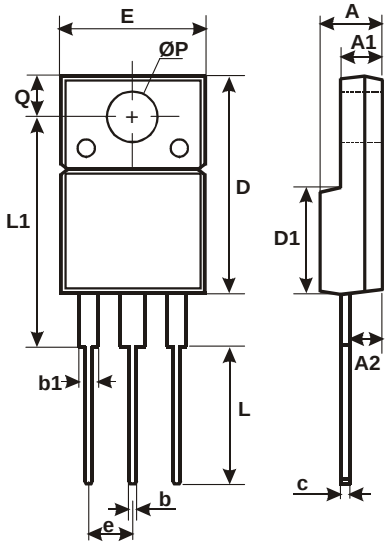

ITO-220AB Alternate (Note 8)		
Dim	Min	Max
A	4.36	4.77
A1	2.54	3.1
A2	2.54	2.8
b	0.55	0.75
b1	1.2	1.5
c	0.38	0.68
D	14.5	15.5
D1	8.38	8.89
E	9.72	10.27
e	2.41	2.67
L	9.87	10.67
L1	15.8	17
ØP	3.08	3.39
Q	2.6	3.0
All Dimensions in mm		

Notes: 8. For product manufactured with Date Code 0733 (week 33, 2007) and newer, please refer to ITO-220AB dimensions. For product manufactured prior to Date Code 0733, please refer to ITO-220AB ALTERNATE dimensions.

© Diodes Incorporated

IMPORTANT NOTICE

DIODES INCORPORATED MAKES NO WARRANTY OF ANY KIND, EXPRESS OR IMPLIED, WITH REGARDS TO THIS DOCUMENT, INCLUDING, BUT NOT LIMITED TO, THE IMPLIED WARRANTIES OF MERCHANTABILITY AND FITNESS FOR A PARTICULAR PURPOSE (AND THEIR EQUIVALENTS UNDER THE LAWS OF ANY JURISDICTION).

Diodes Incorporated and its subsidiaries reserve the right to make modifications, enhancements, improvements, corrections or other changes without further notice to this document and any product described herein. Diodes Incorporated does not assume any liability arising out of the application or use of this document or any product described herein; neither does Diodes Incorporated convey any license under its patent or trademark rights, nor the rights of others. Any Customer or user of this document or products described herein in such applications shall assume all risks of such use and will agree to hold Diodes Incorporated and all the companies whose products are represented on Diodes Incorporated website, harmless against all damages.

Diodes Incorporated does not warrant or accept any liability whatsoever in respect of any products purchased through unauthorized sales channel. Should Customers purchase or use Diodes Incorporated products for any unintended or unauthorized application, Customers shall indemnify and hold Diodes Incorporated and its representatives harmless against all claims, damages, expenses, and attorney fees arising out of, directly or indirectly, any claim of personal injury or death associated with such unintended or unauthorized application.

Products described herein may be covered by one or more United States, international or foreign patents pending. Product names and markings noted herein may also be covered by one or more United States, international or foreign trademarks.

LIFE SUPPORT

Diodes Incorporated products are specifically not authorized for use as critical components in life support devices or systems without the express written approval of the Chief Executive Officer of Diodes Incorporated. As used herein:

A. Life support devices or systems are devices or systems which:

1. are intended to implant into the body, or
2. support or sustain life and whose failure to perform when properly used in accordance with instructions for use provided in the labeling can be reasonably expected to result in significant injury to the user.

B. A critical component is any component in a life support device or system whose failure to perform can be reasonably expected to cause the failure of the life support device or to affect its safety or effectiveness.

Customers represent that they have all necessary expertise in the safety and regulatory ramifications of their life support devices or systems, and acknowledge and agree that they are solely responsible for all legal, regulatory and safety-related requirements concerning their products and any use of Diodes Incorporated products in such safety-critical, life support devices or systems, notwithstanding any devices- or systems-related information or support that may be provided by Diodes Incorporated. Further, Customers must fully indemnify Diodes Incorporated and its representatives against any damages arising out of the use of Diodes Incorporated products in such safety-critical, life support devices or systems.

Copyright © 2012, Diodes Incorporated

www.diodes.com