迪一電子®

SBP30L45CT
SBP30L45FCT
SBP30L45CK
SBP30L45CG
30A LOW VF SCHOTTKY RECTIFIER

Features

- Ultra Low Forward Voltage Drop
- Excellent High Temperature Stability
- Patented Super Barrier Rectifier Technology
- Soft, Fast Switching Capability

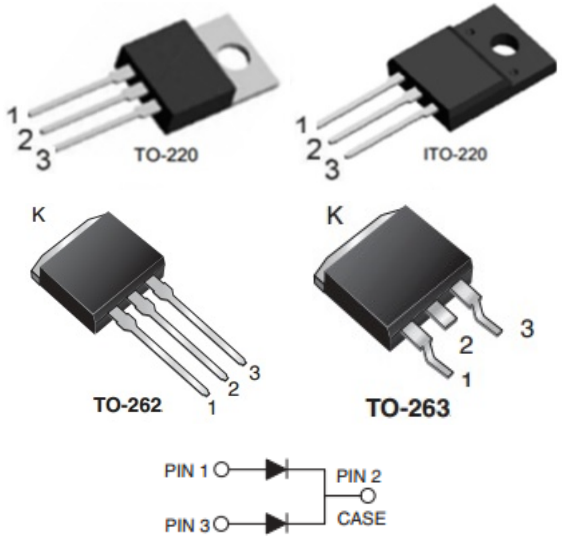

Mechanical Data

- Case: TO-220AB, ITO-220AB,TO-262AB,TO-263AB
- Case Material: Molded Plastic, UL Flammability Classification Rating 94V-0
- Terminals: Matte Tin Finish annealed over Copper leadframe. Solderable per MIL-STD-202, Method 208

Ordering Information

Part No.	Package	Packing
SBP30L45CT	TO-220AB	50pcs / Tube
SBP30L45FCT	ITO-220AB	50pcs / Tube
SBP30L45CK	TO-262AB	50pcs / Tube
SBP30L45CG	TO-263AB	50pcs / Tube
SBP30L45CG	TO-263AB	800pcs / Reel

MAXIMUM RATINGS(T_A=25°C unless otherwise noted)

PARAMETER		SYMBOL	VALUE	UNIT
Maximum repetitive peak reverse voltage		V_{RRM}	45	V
Maximum rms voltage		V_{RMS}	31.5	V
Maximum average forward rectified current	per device per diode	$I_{F(AV)}$	30 15	A
Peak forward surge current 8.3ms single half sine-wave superimposed on rated load	per diode	I_{FSM}	250	A
Typical junction capacitance (V_R=4V, f=1MHz)		C_J	1200	pF
Typical thermal resistance per diode	(Note 1)	$R_{\Theta JC}$	2	°C/W
Operating junction temperature range		T_J	-55 to + 150	°C
Storage temperature range		T_{STG}	-55 to + 150	°C

Note : 1. Mounted on infinite heatsink.

ELECTRICAL CHARACTERISTICS(T_A=25°C unless otherwise noted)

PARAMETER	SYMBOL	TEST CONDITIONS		MIN.	TYP.	MAX.	UNIT
Breakdown voltage per diode	V_{BR}	I_R=0.5mA		45	-	-	V
Instantaneous forward voltage per diode	V_F	I_F=1A I_F=5A I_F=15A	T_J=25°C	- - -	0.28 0.36 0.50	- - 0.55	V
		I_F=1A I_F=5A I_F=15A	T_J=125°C	- - -	0.19 0.31 0.44	- - -	V
Reverse current per diode	I_R	V_R=36V	T_J=25°C T_J=125°C	- -	86 20	- -	μA mA
		V_R=45V	T_J=25°C T_J=125°C	- -	- 36	150 -	μA mA

RATING AND CHARACTERISTIC CURVES

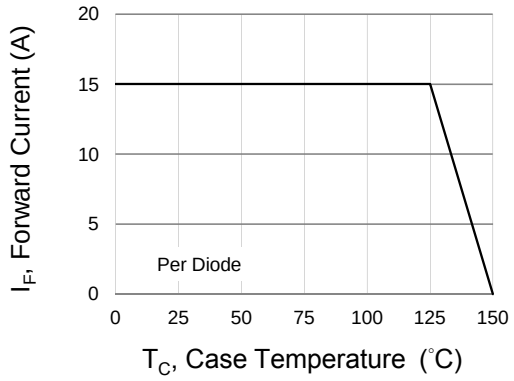

Fig.1 Forward Current Derating Curve

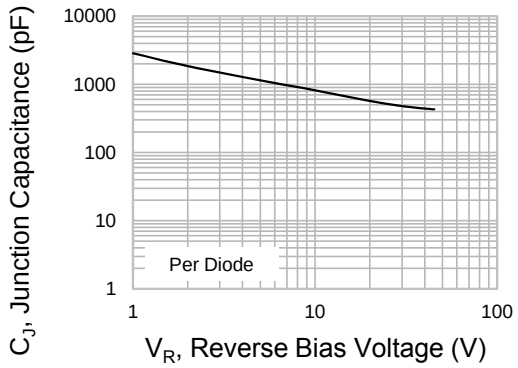

Fig.2 Typical Junction Capacitance

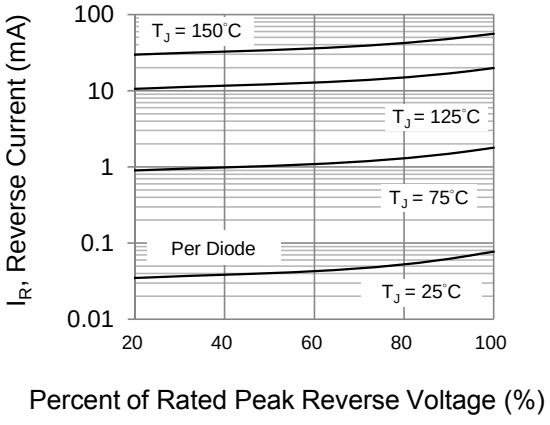

Fig.3 Typical Reverse Characteristics

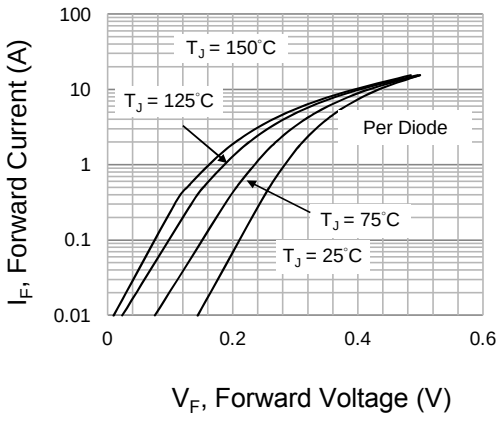

Fig.4 Typical Forward Characteristics

Package Outline Dimensions

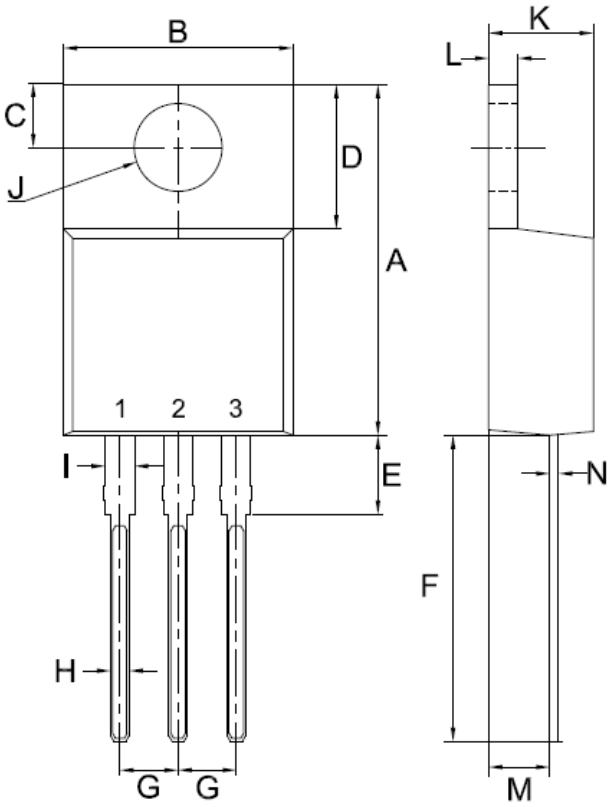

TO-220AB

Unit:mm

DIM	MIN	MAX
A	14.80	15.80
B	9.57	10.57
C	2.54	2.94
D	5.80	6.80
E	2.95	3.95
F	12.70	13.40
G	2.34	2.74
H	0.51	1.11
I	0.97	1.57
J	3.54ϕ	4.14ϕ
K	4.27	4.87
L	1.07	1.47
M	2.03	2.92
N	0.30	0.64

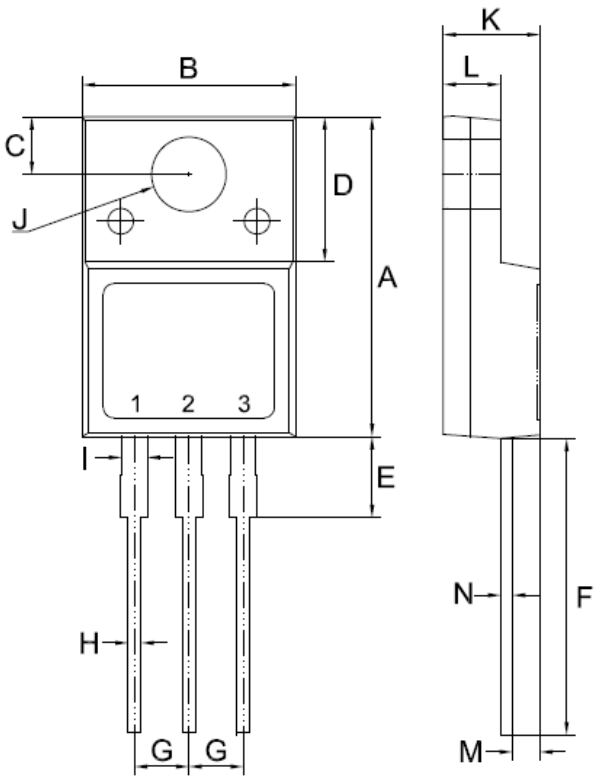

ITO-220AB

Unit:mm

DIM	MIN	MAX
A	14.50	15.50
B	9.50	10.50
C	2.50	2.90
D	6.30	7.30
E	3.30	4.30
F	13.00	14.00
G	2.35	2.75
H	0.30	0.90
I	0.90	1.50
J	3.20	3.80
K	4.24	4.84
L	2.52	2.92
M	1.09	1.49
N	0.47	0.64

Package Outline Dimensions

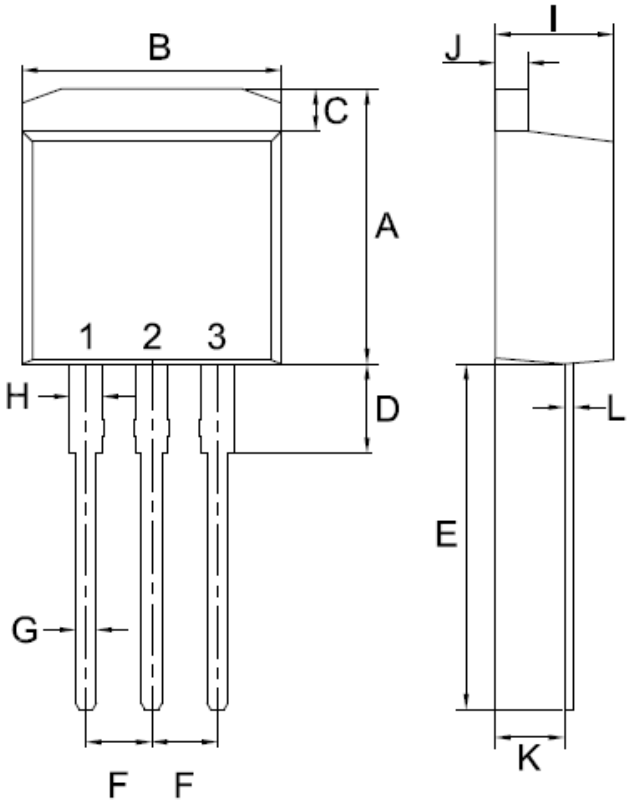

TO-262 (I² PAK)

Unit:mm

DIM	MIN	MAX
A	10.14	11.14
B	9.57	10.57
C	1.44	1.84
D	2.95	3.95
E	12.70	13.40
F	2.34	2.74
G	0.51	1.11
H	0.97	1.57
I	4.27	4.87
J	1.07	1.47
K	2.03	2.92
L	0.30	0.46

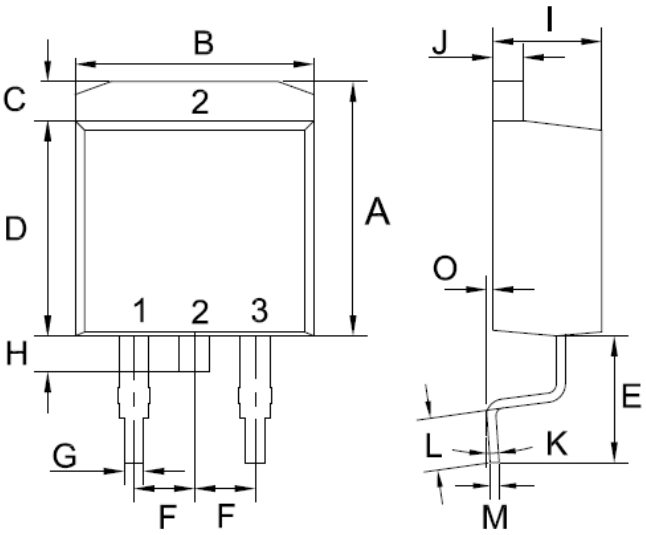

TO-263 (D² PAK)

Unit:mm

DIM	MIN	MAX
A	10.44	10.84
B	9.81	10.21
C	1.44	1.84
D	8.80	9.20
E	4.46	4.66
F	2.44	2.64
G	0.61	1.01
H	0.70	1.30
I	4.27	4.87
J	1.07	1.47
K	0°	8°
L	2.10	2.50
M	0.30	0.46
O	0	0.25

Important Notice and Disclaimer

- Reproducing and modifying information of the document is prohibited without permission from DIYI.

- DIYI reserves the right to make changes to this document and its products and specifications at any time without notice. Customers should obtain and confirm the latest product information and specifications before final design, purchase or use.

- DIYI disclaims any and all liability arising out of the application or use of any product including damages incidentally and consequentially occurred.

- DIYI does not assume any and all implied warranties, including warranties of fitness for particular purpose, non-infringement and merchantability.

- Applications shown on the herein document are examples of standard use and operation. Customers are responsible in comprehending the suitable use in particular applications.
  DIYI makes no representation or warranty that such applications will be suitable for the specified use without further testing or modification.

- The products shown herein are not designed and authorized for equipments requiring high level of reliability or relating to human life and for any applications concerning life-saving or life-sustaining, such as medical instruments, transportation equipment, aerospace machinery et cetera. Customers using or selling these products for use in such applications do so at their own risk and agree to fully indemnify DIYI for any damages resulting from such improper use or sale.

- Since DIYI uses lot number as the tracking base, please provide the lot number for tracking when complaining.