Rev	AWO #	Description	Date	Appr
-	9742	RELEASED	9/18/09	

APPROVED: _____

DATE: _____ TITLE: _____

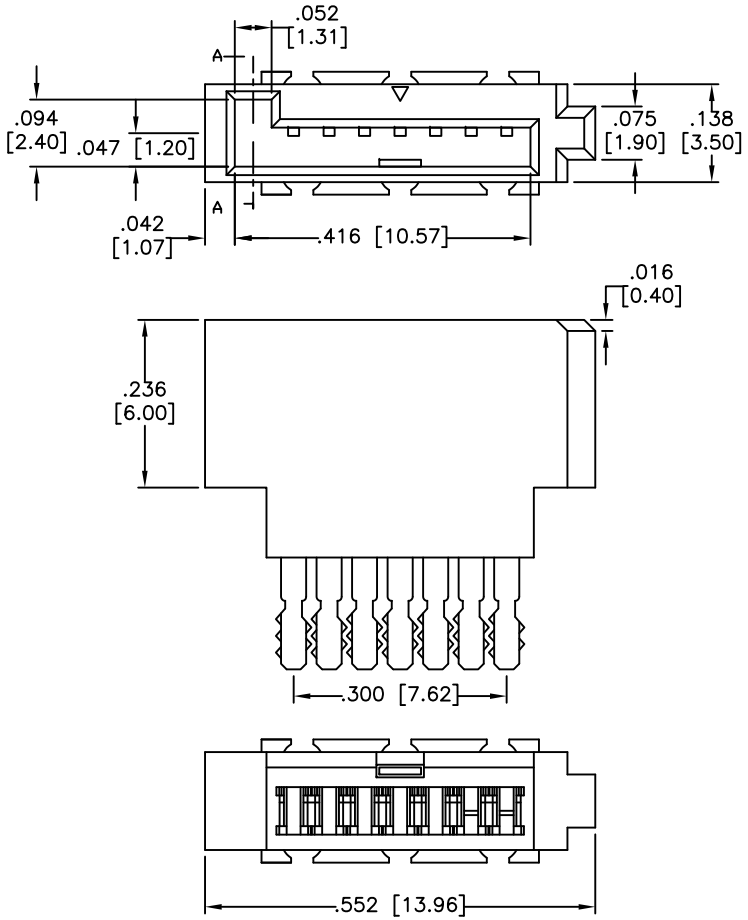

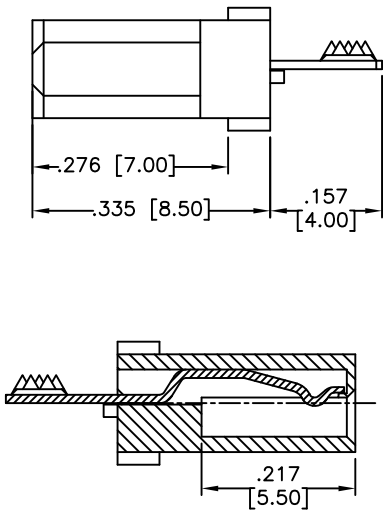

SECTION A–A

Environmental:
Lead free, RoHS compliant

RoHS COMPLIANT

UNLESS OTHERWISE SPECIFIED
ALL DIMENSIONS ARE INCHES [MM]
TOLERANCES: EXCEPT AS NOTED

INCHES		HOLES	
.X	± .10	Ø.X	±.10
.XX	± .020	Ø.XX	±.015
.XXX	± .015	Ø.XXX	±.010

APPROVALS		DATE
DRAWN	DY	9/18/09
CHECKED		
APPROVED		

ADAM TECH
909 Rahway Avenue, Union, NJ 07083
Phone: 908-687-5000 Fax: 908-687-5710

TITLE: SATA CONNECTOR, 7P

SIZE	PART NO.	REV.
X	SATA-Z-PL-CM	-

REF: S00034C | SCALE: NTS | SHEET 1 OF 1