# DATA SHEET




# SAA5284
## Multimedia video data acquisition circuit

Objective specification
Supersedes data of 1997 Mar 03
File under Integrated Circuits, IC22

1998 Feb 05

Philips
Semiconductors




PHILIPS

**CONTENTS**

1 FEATURES
2 GENERAL DESCRIPTION
3 QUICK REFERENCE DATA
4 ORDERING INFORMATION
5 MAIN FUNCTIONAL BLOCKS
6 BLOCK DIAGRAM
7 PINNING INFORMATION
7.1 Pinning
7.2 Pin description
8 FUNCTIONAL DESCRIPTION
8.1 Power supply strategy
8.2 Clocking strategy
8.3 Power-on reset
8.4 Analog switch
8.5 Analog video-to-data byte converter
8.6 Packet filtering
8.7 Packet buffer
8.8 FIFO
8.9 Host interface
8.10 Interrupt support
8.11 DMA support
8.12 $I^2C$-bus interface
9 LIMITING VALUES
10 QUALITY & RELIABILITY
11 CHARACTERISTICS
12 TIMING
13 APPLICATION INFORMATION
13.1 Hardware application circuit for ISA card
13.2 Hardware application circuit for PCI application
13.3 Software application information
14 PACKAGE OUTLINE
15 SOLDERING
15.1 Introduction
15.2 Reflow soldering
15.3 Wave soldering
15.4 Repairing soldered joints
16 DEFINITIONS
17 LIFE SUPPORT APPLICATIONS
18 PURCHASE OF PHILIPS $I^2C$ COMPONENTS

## 1 FEATURES

- High performance multi-standard data slicer
- **Intercast™ (Intel Corporation) compatible**
- Teletext (WST, Chinese teletext) (625 lines)
- Teletext (US teletext, NABTS and MOJI) (525 lines)
- Wide Screen Signalling (WSS), Video Programming Signal (VPS)
- Closed Caption (Europe, US)
- Data broadcast, PDC (packet 30 and 31)
- User programmable data format (programmable framing code)
- 2 kbytes data cache on-chip to avoid data loss and reduce host CPU overhead
- Filtering of packets 30 and 31 WST/NABTS
- Choice of clock frequencies, direct-in clock or crystal oscillator
- Parallel interface, Motorola, Intel and digital video bus
- I²C-bus control
- Data transport by digital video bus
- Choice of programmable interrupt, DMA or polling driven
- Data type selectable video line by video line, with Vertical Blanking Interval and Full Field mode
- Single IC with few external components and small footprint QFP44 package
- Optimized for EMC.

## 2 GENERAL DESCRIPTION

The SAA5284 is a Vertical Blanking Interval (VBI) and Full Field (FF) video data acquisition device tailored for application on PC add-in cards, PC mother-boards, set-top boxes and as a SAA5250 replacement. The IC in combination with a range of software modules will acquire most existing formats of broadcast VBI and FF data.

These associated software modules are available under licence. Scope is provided for acquiring some as yet unspecified formats. The SAA5284 incorporates all the data slicing, parallel interface, data filtering and control logic. It is controlled either by a parallel interface or I²C-bus. It can output ASCII VBI data as pixels on the digital video bus where no parallel port is available. It is available in a QFP44 package.

## 3 QUICK REFERENCE DATA

| SYMBOL | PARAMETER | MIN. | TYP. | MAX. | UNIT |
|---|---|---|---|---|---|
| $V_{DD}$ | supply voltage | 4.5 | 5.0 | 5.5 | V |
| $I_{DD}$ | supply current | – | 72 | 95 | mA |
| $V_{sync(p-p)}$ | sync voltage (peak-to-peak value) | 0.1 | 0.3 | 0.6 | V |
| $V_{i(CVBS)(p-p)}$ | input voltage on pin CVBS0 and CVBS1 (peak-to-peak value) | 0.7 | 1.0 | 1.4 | V |
| $f_{xtal}$ | crystal frequency; see note 1 | – | 12.0 | – | MHz |
| $T_{amb}$ | operating ambient temperature | –20 | – | +70 | °C |

**Note**

1. Selectable: 12, 13.5, 15 or 16 MHz.

## 4 ORDERING INFORMATION

| TYPE NUMBER | PACKAGE | | |
|---|---|---|---|
| | NAME | DESCRIPTION | VERSION |
| SAA5284GP | QFP44 | plastic quad flat package; 44 leads (lead length 2.35 mm); body 14 × 14 × 2.2 mm | SOT205-1 |

## 5 MAIN FUNCTIONAL BLOCKS

1. Input clamp and sync separator
2. Analog-to-digital converter
3. Multi-standard data slicer and clock regenerator
4. Packet filtering; (8 and 4) Hamming correction
5. On-chip data cache
6. Line selectable data type
7. 12, 13.5, 15 and 16 MHz clock or oscillator options
8. FIFO access to data
9. Interrupt and DMA support
10. Multi-standard parallel interface
11. I²C-bus interface
12. Power-on reset.

Figure 1 shows a block diagram of the SAA5284.

## 6 BLOCK DIAGRAM

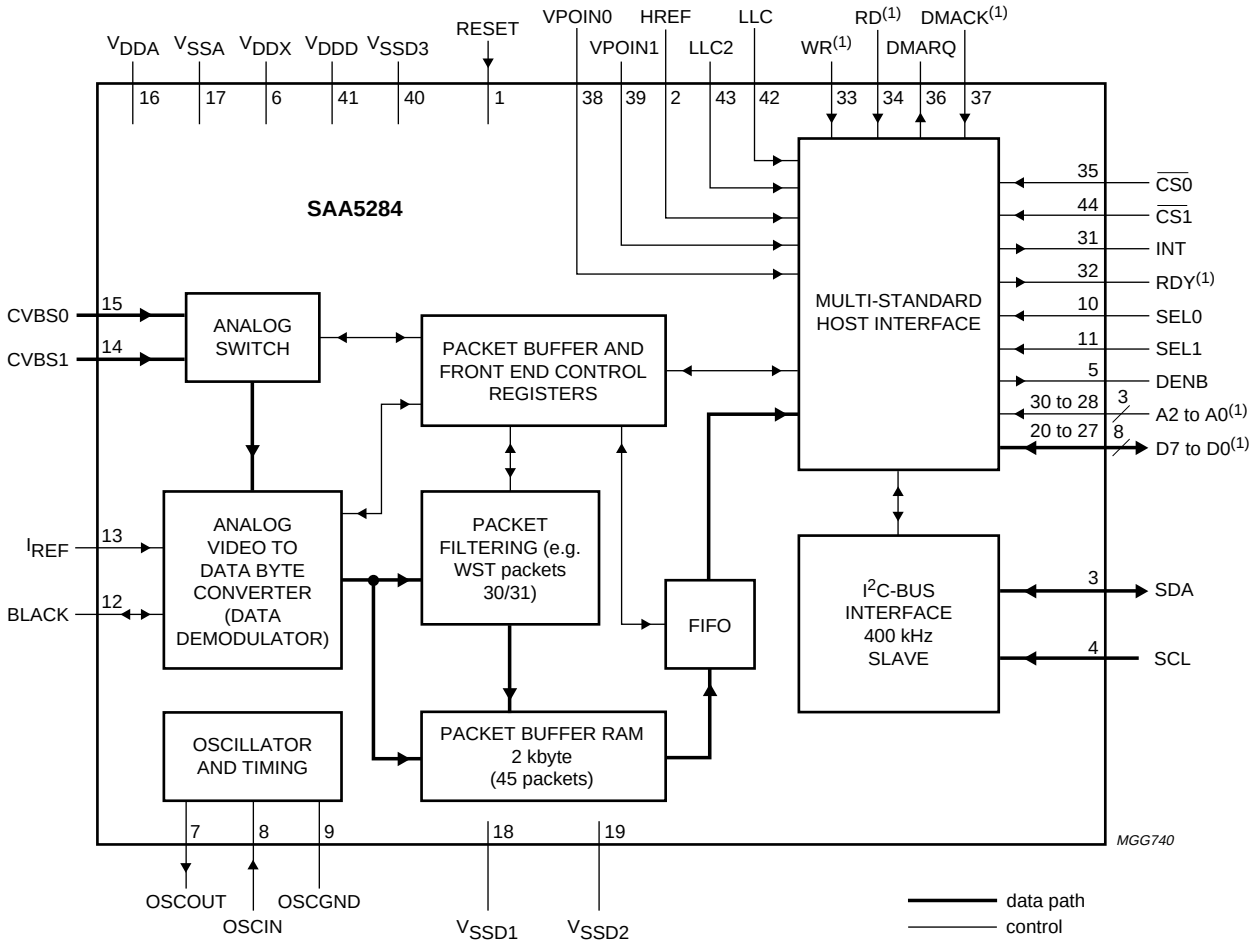


(1) Multi-functional pins, see Chapter 7.

Fig.1 Block diagram.

## 7 PINNING INFORMATION

### 7.1 Pinning

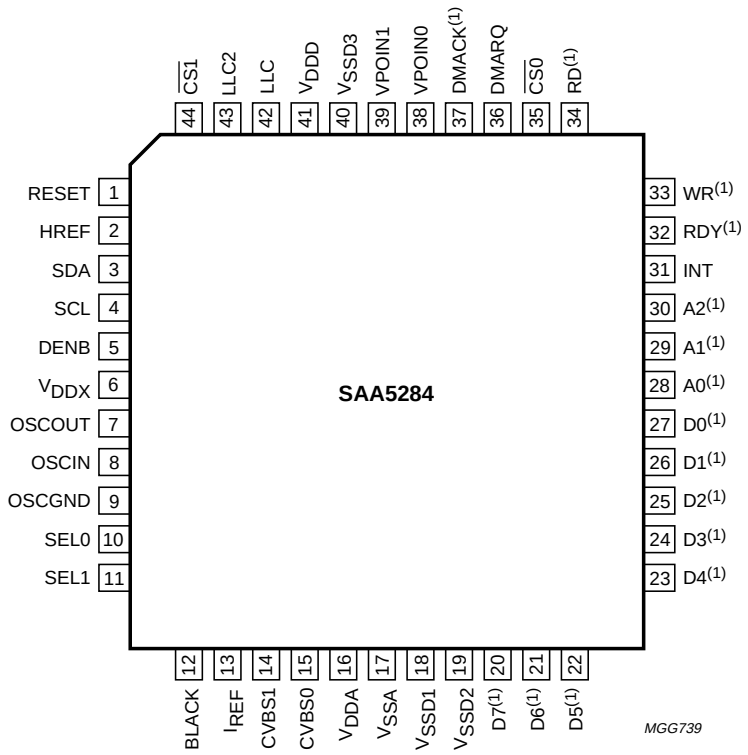


(1) Multi-functional pin.

Fig.2 Pin configuration.

### 7.2 Pin description

**Table 1** QFP44 package

The IC has a total of 44 pins; many of these are multi-functional due to the multiple host block modes of operation.

| SYMBOL | PIN | I/O | DESCRIPTION |
|---|---|---|---|
| RESET | 1 | I | reset IC |
| HREF | 2 | I | video horizontal reference signal (digital video mode only) |
| SDA | 3 | I/O | serial data port for $I^2C$-bus, open-drain |
| SCL | 4 | I | serial clock input for $I^2C$-bus |
| DENB | 5 | O | data enable bar (for external buffers) |
| $V_{DDX}$ | 6 | – | +5 V supply |
| OSCOUT | 7 | O | oscillator output |
| OSCIN | 8 | I | oscillator input |

| SYMBOL | PIN | I/O | DESCRIPTION |
|---|---|---|---|
| OSCGND | 9 | – | oscillator ground |
| SEL0 | 10 | I | parallel interface format select 0 |
| SEL1 | 11 | I | parallel interface format select 1 |
| BLACK | 12 | I/O | video black level storage; connected to $V_{SSA}$ via 100 nF capacitor |
| $I_{REF}$ | 13 | I | reference current input; connected to $V_{SSA}$ via 27 kΩ resistor |
| CVBS1 | 14 | I | analog composite video input 1 |
| CVBS0 | 15 | I | analog composite video input 0 |
| $V_{DDA}$ | 16 | – | analog +5 V supply |
| $V_{SSA}$ | 17 | – | analog ground supply |
| $V_{SSD1}$ | 18 | I | digital ground supply 1 |
| $V_{SSD2}$ | 19 | I | digital ground supply 2 |
| D7(1) | 20 | I/O | data bus 7/video data output 7 |
| D6(1) | 21 | I/O | data bus 6/video data output 6 |
| D5(1) | 22 | I/O | data bus 5/video data output 5 |
| D4(1) | 23 | I/O | data bus 4/video data output 4 |
| D3(1) | 24 | I/O | data bus 3/video data output 3 |
| D2(1) | 25 | I/O | data bus 2/video data output 2 |
| D1(1) | 26 | I/O | data bus 1/video data output 1 |
| D0(1) | 27 | I/O | data bus 0/video data output 0 |
| A0(1) | 28 | I | address input 0/video data input 7 |
| A1(1) | 29 | I | address input 1/video data input 6 |
| A2(1) | 30 | I | address input 2/video data input 5 |
| INT | 31 | O | interrupt request |
| RDY(1) | 32 | O | ready/DTACK (data acknowledge)/VBI, open-drain |
| WR(1) | 33 | I | Intel bus Write/Motorola bus R/$\overline{W}$/video data input 4 |
| RD(1) | 34 | I | Intel bus Read/Motorola bus LDS/video data input 3 |
| $\overline{CS0}$ | 35 | I | chip select 0; active LOW |
| DMARQ | 36 | O | DMA request |
| DMACK(1) | 37 | I | DMA acknowledge/video data input 2 |
| VPOIN0 | 38 | I | video data input 0 |
| VPOIN1 | 39 | I | video data input 1 |
| $V_{SSD3}$ | 40 | – | digital ground supply 3 |
| $V_{DDD}$ | 41 | – | digital +5 V supply |
| LLC | 42 | I | full rate digital video clock input |
| LLC2 | 43 | I | half rate digital video clock input |
| $\overline{CS1}$ | 44 | I | chip select 1; active LOW |

**Note**

1. These pins have two functions, depending on the interface mode.

## 8 FUNCTIONAL DESCRIPTION

### 8.1 Power supply strategy

There are three separate +5 V ($V_{DD}$) connections to the IC:

1. $V_{DDA}$ supplies the critical noise-sensitive analog front-end sections: ADC and sync separator, to reduce interference from the rest of the front-end
2. $V_{DDX}$ supplies all sections which take standing DC current
3. $V_{DDD}$ supplies the rest of the logic.

### 8.2 Clocking strategy

The master frequency reference for the IC is a 12, 13.5, 15 or 16 MHz crystal oscillator. The tolerance on the clock frequency is $500 \times 10^{-6}$ (1.5 kHz). Further specifications of the crystal are given in Table 2.

If preferred, an external 12, 13.5, 15 or 16 MHz (±1.5 kHz) frequency source may be connected to OSCIN instead of the crystal.

### 8.3 Power-on reset

The RESET pin should be held HIGH for a minimum of two clock cycles. The reset signal is passed through a Schmitt trigger internally.

Direct addressed registers (i.e. those addressed using the A0 to A2 pins) are set to 00H after power-up. All other register bits are assumed to be in random states after power-up.

### 8.4 Analog switch

Register bit selection between two video sources.

### 8.5 Analog video-to-data byte converter

This section comprises a line and field sync separator, a video clamp, an ADC and a custom adaptive digital filter with DPLL based timing circuit.

The analog video-to-data byte converter is specifically designed to overcome the most commonly found types of distortion of a broadcast video signal. It is also fully multi-standard. The data type to be demodulated is programmable on a line-by-line basis using 4 register bits per line for lines 2 to 23 (PAL numbering), fields 1 and 2, and 4 further bits for all lines combined.

### 8.6 Packet filtering

If using a slow (e.g. 80C51) microcontroller, it is necessary to reduce the amount of data acquired by SAA5284 before downloading to the microcontroller to avoid it being swamped by unwanted data. Packet filtering is available for this purpose. A common use of this would be to acquire only packet 8/30 in 625-line WST. The packet filter includes optional (8, 4) Hamming correction.

### 8.7 Packet buffer

This is a 2 kbyte RAM which acts as a buffer for storing received packets. The first 44 bytes are reserved for control information. The rest of the RAM is divided into 44-byte rows (or packets), each holding the data received on one incoming CVBS line. In the case of a WST packet received, the data stored consists of a Magazine and Row-Address Group (2 bytes), followed by the 40 bytes of packet data. When data in other formats than WST is received, this is stored in the packet buffer in the same way. In each case, the data is preceded by two information bytes which record on which line and field the packet was received, and what the data type is.

### 8.8 FIFO

FIFO hardware is provided to manage the ‘read’ address for the host processor, i.e. data is read repeatedly from the same 8-bit port, and appears byte-serially in the order of reception. The read address can be reset to the start of the packet buffer (the first 44-byte packet), back to the start of the current packet, or incremented to the start of the next packet.

**Table 2** Crystal characteristics

| SYMBOL | PARAMETER | MIN. | TYP. | MAX. | UNIT |
|---|---|---|---|---|---|
| C1 | series capacitance | – | 18.5 | – | fF |
| C2 | parallel capacitance | – | 4.9 | – | pF |
| $R_r$ | resonant resistance | – | – | 50 | Ω |
| $X_a$ | ageing | – | – | $5 \times 10^{-6}$ | per year |
| $X_j$ | adjustment tolerance | – | – | $25 \times 10^{-6}$ | – |
| $X_d$ | drift | – | – | $25 \times 10^{-6}$ | – |

### 8.9 Host interface

The SAA5284 has a multi-standard 8-bit I/O interface. To reduce the amount of host I/O space used, the parallel interface has only 3 address inputs (A0, A1 and A2). An extended addressing (pointer) scheme and the data FIFO are used to allow access to the full set of SAA5284 registers and the full span of the packet buffer.

As well as the 8 data I/O lines and 3 address lines, there are the following control signals: RD (read LOW), WR (write LOW), $\overline{CS0}$ (chip select LOW), $\overline{CS1}$(second chip select LOW), INT (interrupt request), DMARQ (DMA request), DMACK (DMA acknowledge) and RDY (ready).

In order to maintain compatibility with Motorola and Intel type buses, two control signals SEL0 and SEL1 are provided to configure the host interface. These signals allow configuration of the host interface to work with the Motorola or Intel style interfaces.

The host interface has a digital video mode. Digital video mode may be used to allow the SAA5284 to pass decoded VBI data into a system using the digital video bus.

### 8.10 Interrupt support

The host interface provides comprehensive support for interrupt generation. The interrupt may be programmed to occur when a particular number of packets of VBI data are available in the cache RAM. The interrupts can be further controlled to occur on a specific line in the TV frame. The interrupts can also be self masking if required.

### 8.11 DMA support

Burst and demand mode DMA are supported. In burst mode, the number of packets to transfer can be defined. An interrupt can be generated when DMA is finished. This can be self masking.

### 8.12 $I^2C$-bus interface

The $I^2C$-bus interface functions as a slave receiver or transmitter at up to 400 kHz. The $I^2C$-bus address is selectable as 20H or 22H. All functionality is available using the $I^2C$-bus although with a slower data transfer speed. It is possible to use the $I^2C$-bus in all modes.

## 9 LIMITING VALUES

In accordance with the Absolute Maximum Rating System (IEC 134).

| SYMBOL | PARAMETER | MIN. | MAX. | UNIT |
|---|---|---|---|---|
| $V_{DD}$ | supply voltage (all supplies) | –0.3 | +6.5 | V |
| $V_{I(max)}$ | input voltage (any input) | –0.3 | $V_{DD}$ + 0.5 | V |
| $V_{O(max)}$ | output voltage (any output) | –0.3 | $V_{DD}$ + 0.5 | V |
| $\Delta V_{DDD–DDA–DDX}$ | supply voltage difference between $V_{DDD}$, $V_{DDA}$ and $V_{DDX}$ | – | 0.25 | V |
| $I_{IOK}$ | DC input or output diode current | – | 20 | mA |
| $I_{O(max)}$ | output current (any output) | – | 10 | mA |
| $T_{stg}$ | storage temperature | –55 | +125 | °C |
| $T_{amb}$ | operating ambient temperature | –20 | +70 | °C |

## 10 QUALITY & RELIABILITY

In accordance with *“SNW-FQ-611-E”*.

## 11 CHARACTERISTICS

$T_{amb}$ = −20 to +70 °C; $V_{DD}$ = 4.5 to 5.5 V; unless otherwise specified.

| SYMBOL | PARAMETER | CONDITIONS | MIN. | TYP. | MAX. | UNIT |
|---|---|---|---|---|---|---|
| **Power supply** | | | | | | |
| $V_{DDn}$ | supply voltage | | 4.5 | 5.0 | 5.5 | V |
| $I_{DD(tot)}$ | total supply current | | – | 72 | 95 | mA |
| $I_{DDD}$ | digital supply current | | – | 32 | 42 | mA |
| $I_{DDA}$ | analog supply current | | – | 40 | 53 | mA |
| **Inputs CVBS0 and CVBS1** | | | | | | |
| $V_{sync(p-p)}$ | sync voltage (peak-to-peak value) | | 0.1 | 0.3 | 0.6 | V |
| $V_{burst(p-p)}$ | colour burst voltage (peak-to-peak value) | | 0 | 0.3 | 0.4 | V |
| $V_{i(vid)(p-p)}$ | video input voltage (peak-to-peak value) | | 0.7 | 1.0 | 1.4 | V |
| $V_{i(data)(p-p)}$ | teletext data input voltage (peak-to-peak value) | | 0.29 | 0.46 | 0.71 | V |
| $Z_{source}$ | source impedance | | – | – | 250 | Ω |
| $V_{i(sw)}$ | input switching level of sync separator | | 1.5 | 1.8 | 2.1 | V |
| $Z_i$ | input impedance | | 2.5 | 5.0 | – | kΩ |
| $C_i$ | input capacitance | | – | – | 10 | pF |
| **Input $I_{REF}$** | | | | | | |
| $R_{IREF}$ | external resistor to $V_{SSA}$ | | – | 27 | – | kΩ |
| **Inputs RESET, HREF, SEL0, SEL1, A0, A1, A2, WR, RD, $\overline{CS0}$, $\overline{CS1}$, DMACK, VPOIN1, VPOIN0, LLC and LLC2** | | | | | | |
| $V_{IL}$ | LOW-level input voltage | | −0.3 | – | +0.8 | V |
| $V_{IH}$ | HIGH-level input voltage | | 2.0 | – | $V_{DD}$ + 0.5 | V |
| $I_{LI}$ | input leakage current | $V_i$ = 0 to $V_{DD}$ | −10 | – | +10 | µA |
| $C_i$ | input capacitance | | – | – | 10 | pF |
| **Input SCL** | | | | | | |
| $V_{IL}$ | LOW-level input voltage | | −0.5 | – | +1.5 | V |
| $V_{IH}$ | HIGH-level input voltage | | 3.0 | – | $V_{DD}$ + 0.5 | V |
| $I_{LI}$ | input leakage current | $V_i$ = 0 to $V_{DD}$ | −10 | – | +10 | µA |
| $C_i$ | input capacitance | | | – | 10 | pF |
| $t_{i(r)}$ | input rise time | $V_{IL(min)}$ to $V_{IH(max)}$; $f_{i(SCL)}$ = 100 kHz | 50 | – | 1000 | ns |
| | | $V_{IL(min)}$ to $V_{IH(max)}$; $f_{i(SCL)}$ = 400 kHz | 50 | – | 300 | ns |
| $t_{i(f)}$ | input fall time | $V_{IL(max)}$ to $V_{IH(min)}$; $f_{i(SCL)}$ = 100 kHz | 50 | – | 300 | ns |
| | | $V_{IL(max)}$ to $V_{IH(min)}$; $f_{i(SCL)}$ = 400 kHz | 50 | – | 300 | ns |
| $f_{i(SCL)}$ | input clock frequency | | 0 | – | 400 | kHz |
| $C_L$ | load capacitance | | – | – | 400 | pF |

| SYMBOL | PARAMETER | CONDITIONS | MIN. | TYP. | MAX. | UNIT |
|---|---|---|---|---|---|---|
| **Input/output SDA (open-drain)** | | | | | | |
| $V_{IL}$ | LOW-level input voltage | | –0.5 | – | +1.5 | V |
| $V_{IH}$ | HIGH-level input voltage | | 3.0 | – | $V_{DD}$ + 0.5 | V |
| $I_{LI}$ | input leakage current | $V_I$ = 0 to $V_{DD}$ | –10 | – | +10 | µA |
| $C_i$ | input capacitance | | | – | 10 | pF |
| $t_{i(r)}$ | input rise time | $V_{IL(min)}$ to $V_{IH(max)}$; $f_{i(SCL)}$ = 100 kHz | 50 | – | 1000 | ns |
| | | $V_{IL(min)}$ to $V_{IH(max)}$; $f_{i(SCL)}$ = 400 kHz | 50 | – | 300 | ns |
| $t_{i(f)}$ | input fall time | $V_{IL(max)}$ to $V_{IH(min)}$; $f_{i(SCL)}$ = 100 kHz | 50 | – | 300 | ns |
| | | $V_{IL(max)}$ to $V_{IH(min)}$; $f_{i(SCL)}$ = 400 kHz | 50 | – | 300 | ns |
| $V_{OL}$ | LOW-level output voltage | $I_{OL}$ = 3 mA | 0 | – | 0.4 | V |
| | | $I_{OL}$ = 6 mA | 0 | – | 0.6 | V |
| $t_{o(f)}$ | output fall time | between 3 and 1.5 V; $I_{OL}$ = 3 mA | 50 | – | 250 | ns |
| $C_L$ | load capacitance | | – | – | 400 | pF |
| **Input/output BLACK** | | | | | | |
| $C_{BLACK}$ | storage capacitance to $V_{SSA}$ | | – | 100 | – | nF |
| **Inputs/outputs D7 to D0** | | | | | | |
| $V_{IL}$ | LOW-level input voltage | | –0.3 | – | +0.8 | V |
| $V_{IH}$ | HIGH-level input voltage | | 2.0 | – | $V_{DD}$ + 0.5 | V |
| $I_{LI}$ | input leakage current | $V_{IN}$ = 0 to $V_{DD}$ | –10 | – | +10 | µA |
| $C_i$ | input capacitance | | – | – | 10 | pF |
| $V_{OL}$ | LOW-level output voltage | $I_{OL}$ = +1.6 mA | 0 | – | 0.4 | V |
| $V_{OH}$ | HIGH-level output voltage | $I_{OH}$ = –0.2 mA | 2.4 | – | $V_{DD}$ | V |
| $C_L$ | load capacitance | | – | – | tbf | pF |
| $t_{o(r)}$ | output rise time into $C_L$ | 0.6 to 2.2 V | – | – | tbf | ns |
| $t_{o(f)}$ | output fall time into $C_L$ | 2.2 to 0.6 V | – | – | tbf | ns |
| **Outputs INT, DENB and DMARQ** | | | | | | |
| $V_{OL}$ | LOW-level output voltage | $I_{OL}$ = +1.6 mA | 0 | – | 0.4 | V |
| $V_{OH}$ | HIGH-level output voltage | $I_{OH}$ = –0.2 mA | 2.4 | – | $V_{DD}$ | V |
| $C_L$ | load capacitance | | – | – | tbf | pF |
| $t_{o(r)}$ | output rise time into $C_L$ | 0.6 to 2.2 V | – | – | tbf | ns |
| $t_{o(f)}$ | output fall time into $C_L$ | 2.2 to 0.6 V | – | – | tbf | ns |
| **RDY (open-drain)**; note 1 | | | | | | |
| $V_{OL}$ | LOW-level output voltage | $I_{OL}$ = +1.6 mA | 0 | – | 0.4 | V |
| $C_L$ | load capacitance | | – | – | tbf | pF |
| $t_{o(r)}$ | output rise time into $C_L$ | 0.6 to 2.2 V | – | – | tbf | ns |
| $t_{o(f)}$ | output fall time into $C_L$ | 2.2 to 0.6 V | – | – | tbf | ns |

| SYMBOL | PARAMETER | CONDITIONS | MIN. | TYP. | MAX. | UNIT |
|---|---|---|---|---|---|---|
| **$I^2C$-bus timings** (see note 2 and Fig.8) | | | | | | |
| $f_{i(SCL)}$ | SCL input clock frequency | $f_{i(SCL)}$ = 100 kHz | 0 | – | 100 | kHz |
| | | $f_{i(SCL)}$ = 400 kHz | 0 | – | 400 | kHz |
| $t_{LOW}$ | SCL LOW time | $f_{i(SCL)}$ = 100 kHz | 4.7 | – | – | µs |
| | | $f_{i(SCL)}$ = 400 kHz | 1.3 | – | – | µs |
| $t_{HIGH}$ | SCL HIGH time | $f_{i(SCL)}$ = 100 kHz | 4.0 | – | – | µs |
| | | $f_{i(SCL)}$ = 400 kHz | 0.6 | – | – | µs |
| $t_{SU;DAT}$ | data set-up time | $f_{i(SCL)}$ = 100 kHz | 250 | – | – | ns |
| | | $f_{i(SCL)}$ = 400 kHz | 100 | – | – | ns |
| $t_{HD;DAT}$ | data hold time | $f_{i(SCL)}$ = 100 kHz | 0 | – | – | µs |
| | | $f_{i(SCL)}$ = 400 kHz | 0 | – | – | µs |
| $t_{SU;STO}$ | set-up time STOP condition | $f_{i(SCL)}$ = 100 kHz | 4.7 | – | – | µs |
| | | $f_{i(SCL)}$ = 400 kHz | 0.6 | – | – | µs |
| $t_{BUF}$ | bus free time | $f_{i(SCL)}$ = 100 kHz | 4.7 | – | – | µs |
| | | $f_{i(SCL)}$ = 400 kHz | 1.3 | – | – | µs |
| $t_{HD;STA}$ | hold time START condition | $f_{i(SCL)}$ = 100 kHz | 4.0 | – | – | µs |
| | | $f_{i(SCL)}$ = 400 kHz | 0.6 | – | – | µs |
| $t_{SU;STA}$ | set-up time repeated START | $f_{i(SCL)}$ = 100 kHz | 4.7 | – | – | µs |
| | | $f_{i(SCL)}$ = 400 kHz | 0.6 | – | – | µs |
| $t_r$ | rise time (SDA and SCL) | $f_{i(SCL)}$ = 100 kHz | – | – | 1000 | ns |
| | | $f_{i(SCL)}$ = 400 kHz | – | – | 300 | ns |
| $t_f$ | fall time (SDA and SCL) | $f_{i(SCL)}$ = 100 kHz | – | – | 300 | ns |
| | | $f_{i(SCL)}$ = 400 kHz | – | – | 300 | ns |

**Notes**

1. ESD protection of this pin falls below the Philips General Quality Specification (GQS). Therefore it is recommended that a diode is connected from pin RDY to $V_{DDD}$.
2. The $I^2C$-bus interface pins SDA and SCL may pull the data and clock lines below 3 V while the digital power supply $V_{DDD}$ is in the range 0.4 to 0.8 V.

## 12 TIMING

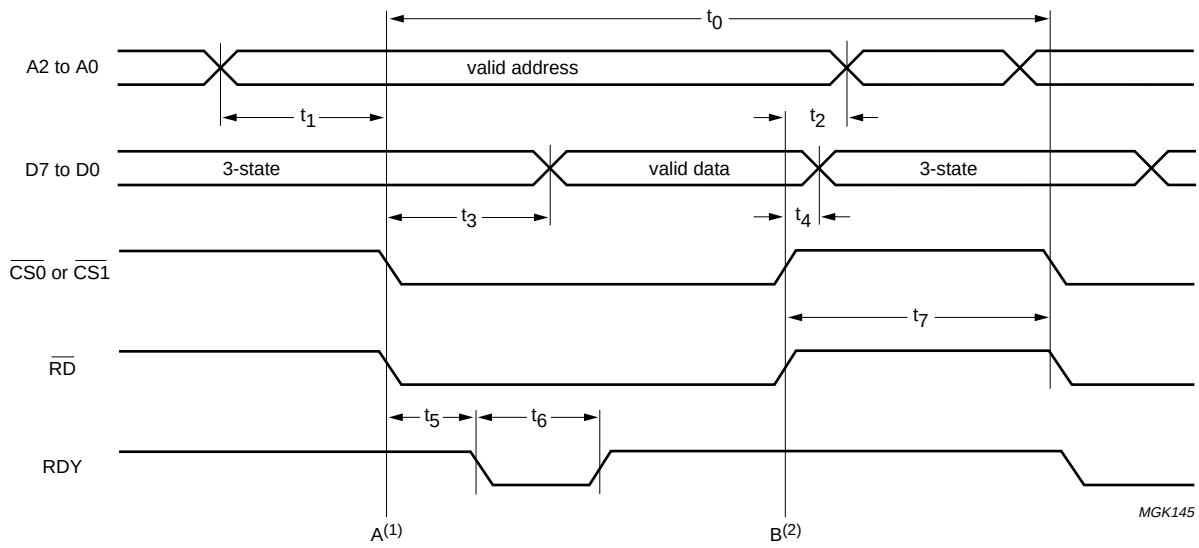


(1) Event A occurs when $\overline{RD} + \overline{CS0} + \overline{CS1} = 0$ (boolean).
(2) Event B occurs when $\overline{RD} + \overline{CS0} + \overline{CS1} = 1$ (boolean).

Fig.3 Intel mode interface read cycle timing.

**Table 3** Intel-mode interface read cycle timing (12 MHz clock)

| SYMBOL | DESCRIPTION | MIN. | MAX. | UNIT |
|---|---|---|---|---|
| $t_0$ | minimum cycle time | 333 | 833 | ns |
| $t_1$ | address set-up time before event A | 0 | – | ns |
| $t_2$ | address hold time after event B | 0 | – | ns |
| $t_3$ | data settling time | 88 | 712 | ns |
| $t_4$ | data hold time after event B | 0 | – | ns |
| $t_5$ | time from event A until RDY goes LOW | 83 | 170 | ns |
| $t_6$ | RDY LOW time | 83 | 530 | ns |
| $t_7$ | event B to next event A time | 83 | – | ns |

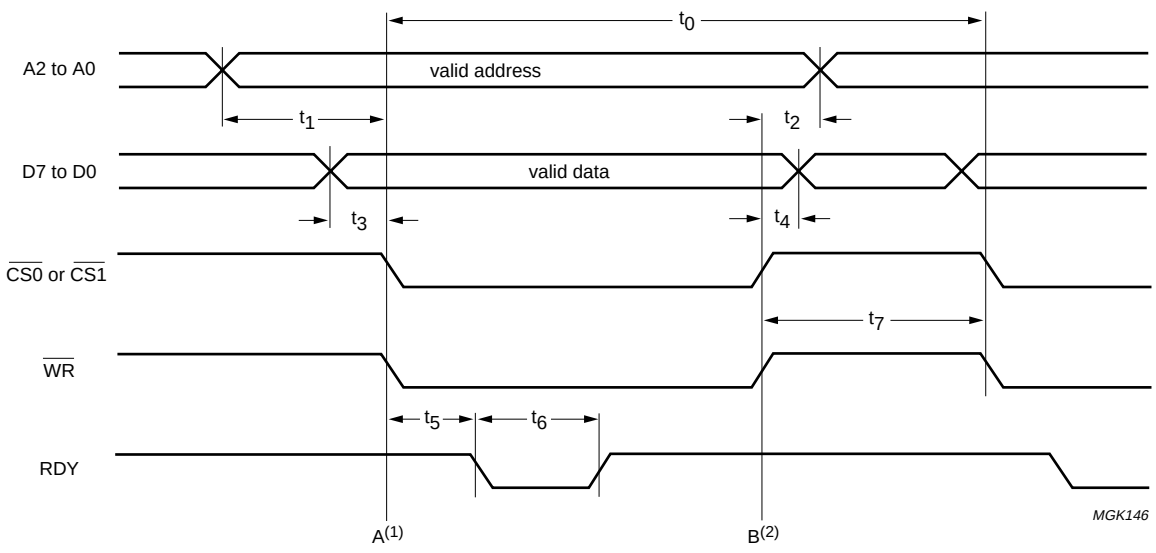


(1) Event A occurs when $\overline{WR}$ + $\overline{CS0}$ + $\overline{CS1}$ = 0 (boolean).
(2) Event B occurs when $\overline{WR}$ + $\overline{CS0}$ + $\overline{CS1}$ = 1 (boolean).

Fig.4 Intel mode interface write cycle timing.

**Table 4** Intel-mode interface write cycle timing (12 MHz clock)

| SYMBOL | DESCRIPTION | MIN. | MAX. | UNIT |
|---|---|---|---|---|
| $t_0$ | minimum cycle time | 333 | 833 | ns |
| $t_1$ | address set-up time | 0 | – | ns |
| $t_2$ | address hold time | 0 | – | ns |
| $t_3$ | data set-up time, note 1 | 0 | – | ns |
| $t_4$ | data hold time | 0 | – | ns |
| $t_5$ | RDY set-up time | 83 | 170 | ns |
| $t_6$ | RDY LOW time | 83 | 530 | ns |
| $t_7$ | event B to next event A time | 83 | – | ns |

**Note**

1. Legacy AT bus PCs may not satisfy this requirement as they are not ISA compatible. An application fix is available in the *"SAA5284 Users Guide"*.

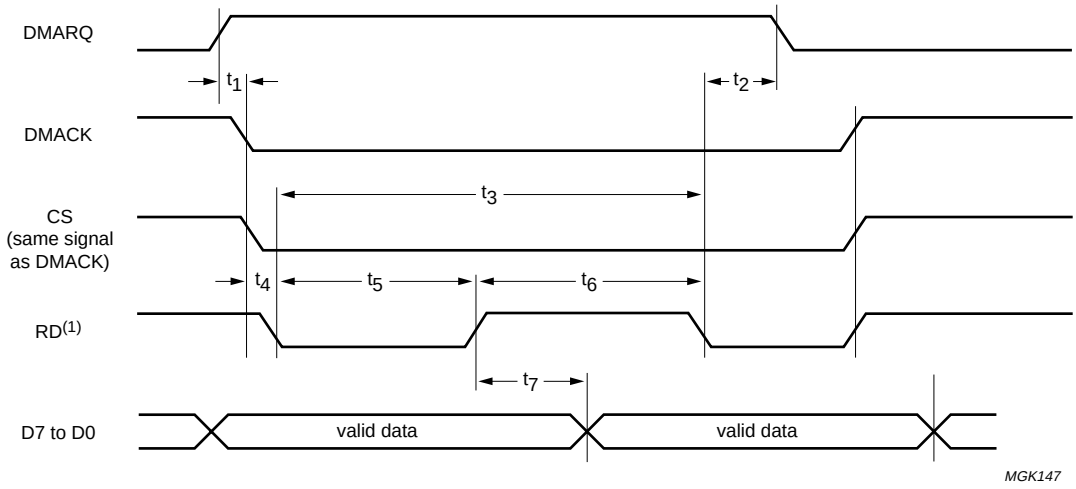


(1) Read data pipelined, so no RD LOW to data valid set-up time.

Fig.5 Intel mode interface DMA cycle timing.

**Table 5** Intel-mode interface DMA cycle timing (12 MHz clock)

| SYMBOL | DESCRIPTION | MIN. | MAX. | UNIT |
|---|---|---|---|---|
| $t_1$ | DMARQ to DMACK | 0 | – | ns |
| $t_2$ | RD LOW to DMARQ LOW | 0 | 212 | ns |
| $t_3$ | cycle time | 252 | – | ns |
| $t_4$ | DMACK to RD active | – | 0 | ns |
| $t_5$ | data set-up time | 0 | 90(1) | ns |
| $t_6$ | data hold time | 83 | – | ns |
| $t_7$ | data hold from DMACK HIGH | 0 | 83 | ns |

**Note**

1. This timing will be up to 3 clock cycles for the first read in DMA transfer.

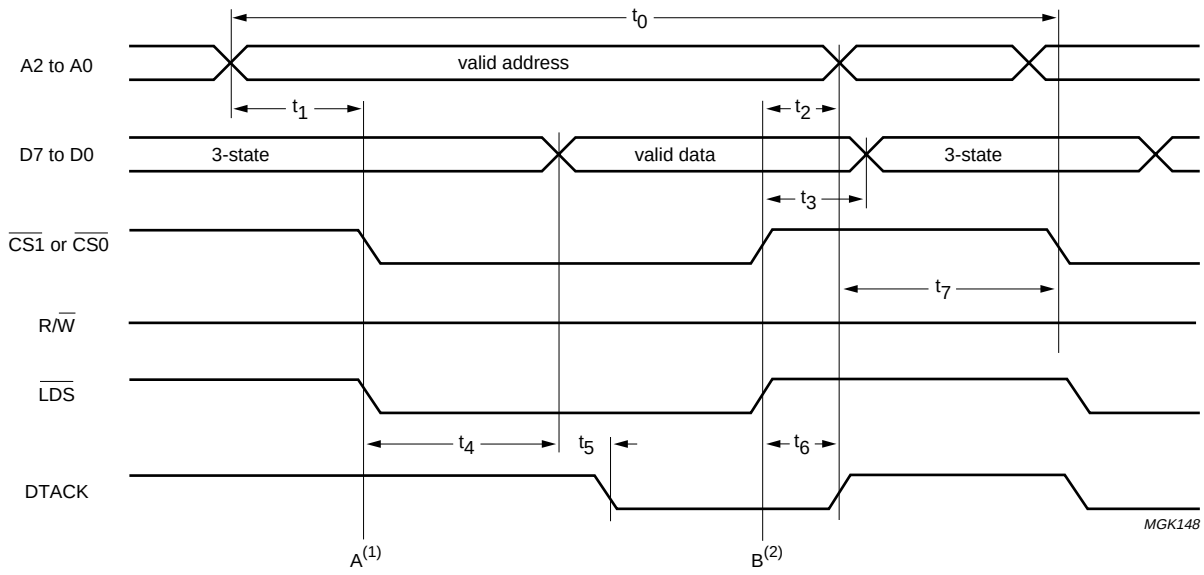


(1) Event A occurs when $\overline{LDS} + \overline{CS0} + \overline{CS1} = 0$ (boolean).
(2) Event B occurs when $\overline{LDS} + \overline{CS0} + \overline{CS1} = 1$ (boolean).

Fig.6 Motorola mode interface read cycle timing.

**Table 6** Motorola-mode interface read cycle timing (12 MHz clock)

| SYMBOL | DESCRIPTION | MIN. | MAX. | UNIT |
|---|---|---|---|---|
| $t_0$ | minimum cycle time | 333 | 833 | ns |
| $t_1$ | address set-up time before event A | 0 | – | ns |
| $t_2$ | address hold time after event B | 0 | – | ns |
| $t_3$ | data hold time from event B | 0 | – | ns |
| $t_4$ | data settling time | 88 | 712 | ns |
| $t_5$ | data valid to DTACK LOW | 83 | 170 | ns |
| $t_6$ | $\overline{LDS}$ HIGH to DTACK HIGH | 83 | 212 | ns |
| $t_7$ | delay between cycles | 83 | – | ns |

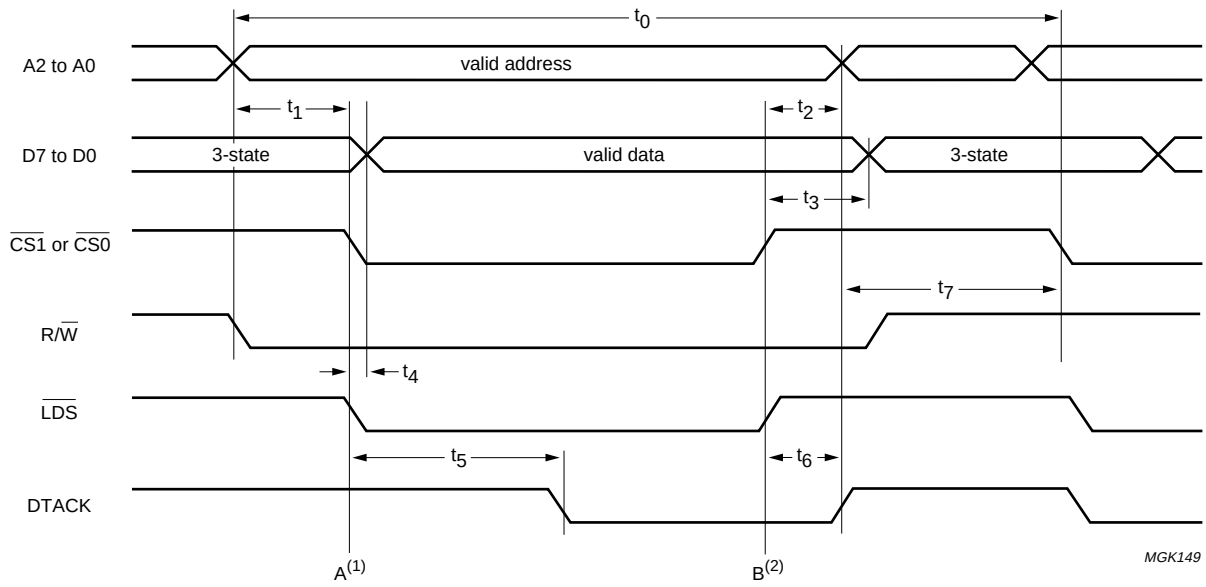


(1) Event A occurs when $\overline{LDS} + \overline{CS0} + \overline{CS1} = 0$ (boolean).
(2) Event B occurs when $\overline{LDS} + \overline{CS0} + \overline{CS1} = 1$ (boolean).

Fig.7 Motorola mode interface write cycle timing.

**Table 7** Motorola-mode interface write cycle timing (12 MHz clock)

| SYMBOL | DESCRIPTION | MIN. | MAX. | UNIT |
|---|---|---|---|---|
| $t_0$ | minimum cycle time | 333 | 417 | ns |
| $t_1$ | address set-up time before event A | 0 | – | ns |
| $t_2$ | address hold time after event B | 0 | – | ns |
| $t_3$ | data hold time from event B | 0 | – | ns |
| $t_4$ | data set-up time | 0 | – | ns |
| $t_5$ | DTACK set-up time | – | 212 | ns |
| $t_6$ | $\overline{LDS}$ HIGH to DTACK HIGH | 83 | 212 | ns |
| $t_7$ | delay between cycles | 83 | – | ns |

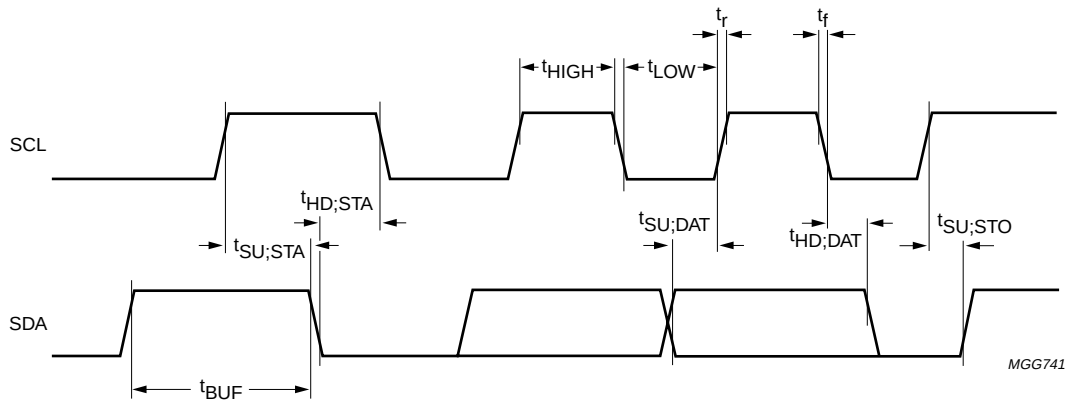


Fig.8 $I^2C$-bus timing diagram.

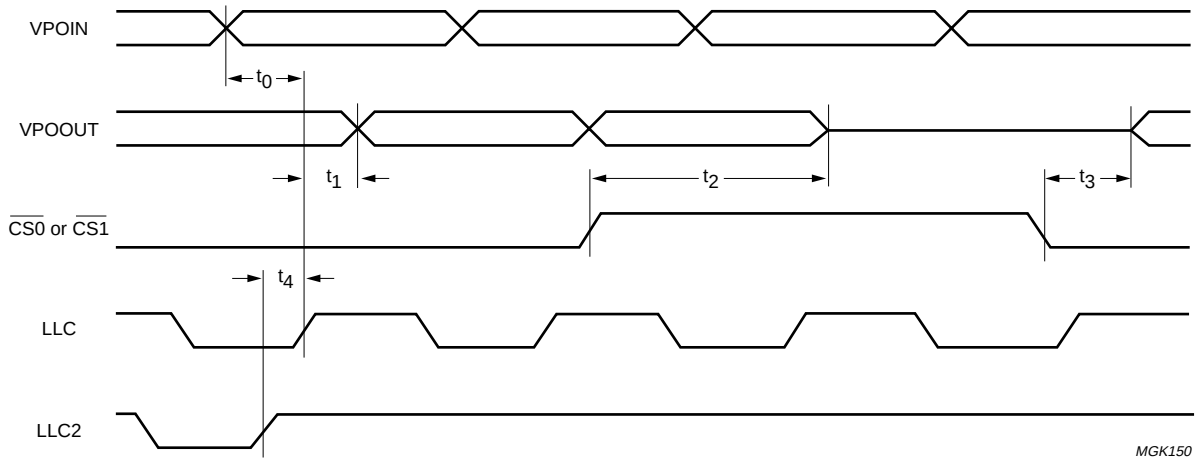


Fig.9 Digital video mode interface timing.

**Table 8** Digital video mode interface timing with 13.5 MHz clock and 27 MHz LLC

| SYMBOL | DESCRIPTION | MIN. | TYP. | MAX. | UNIT |
|---|---|---|---|---|---|
| $t_0$ | VPOIN set-up time | 4 | 5 | 6 | ns |
| $t_1$ | VPOOUT set-up time | 8 | 10 | 22 | ns |
| $t_2$ | $\overline{CS}$ HIGH to VPOOUT 3-state | 6 | 10 | 25 | ns |
| $t_3$ | $\overline{CS}$ LOW to VPOOUT enabled | 9 | 11 | 16 | ns |
| $t_4$ | clock qualifier set-up time | – | 1.1 | – | ns |

## 13 APPLICATION INFORMATION

### 13.1 Hardware application circuit for ISA card

A typical application circuit diagram (for the ISA card application) is shown in Fig.10.

### 13.2 Hardware application circuit for PCI application

This PCI application is based around the Philips SAA7146 video to PCI bridge IC. SAA7146 has a ‘Data Expansion Bus Interface’ (DEBI) which is an Intel/Motorola style 16-bit parallel interface. This is used to facilitate communications to SAA5284.

The application circuit diagram is shown in Fig.11.

### 13.3 Software application information

PC application software is available providing two levels of interface. At a low level a VxD based driver offers generic packet gathering and buffering. Full support is provided for ISA based applications with facility for PCI based applications. Higher level support is provided by a series of DLLs. These perform normal teletext display generation and page management.

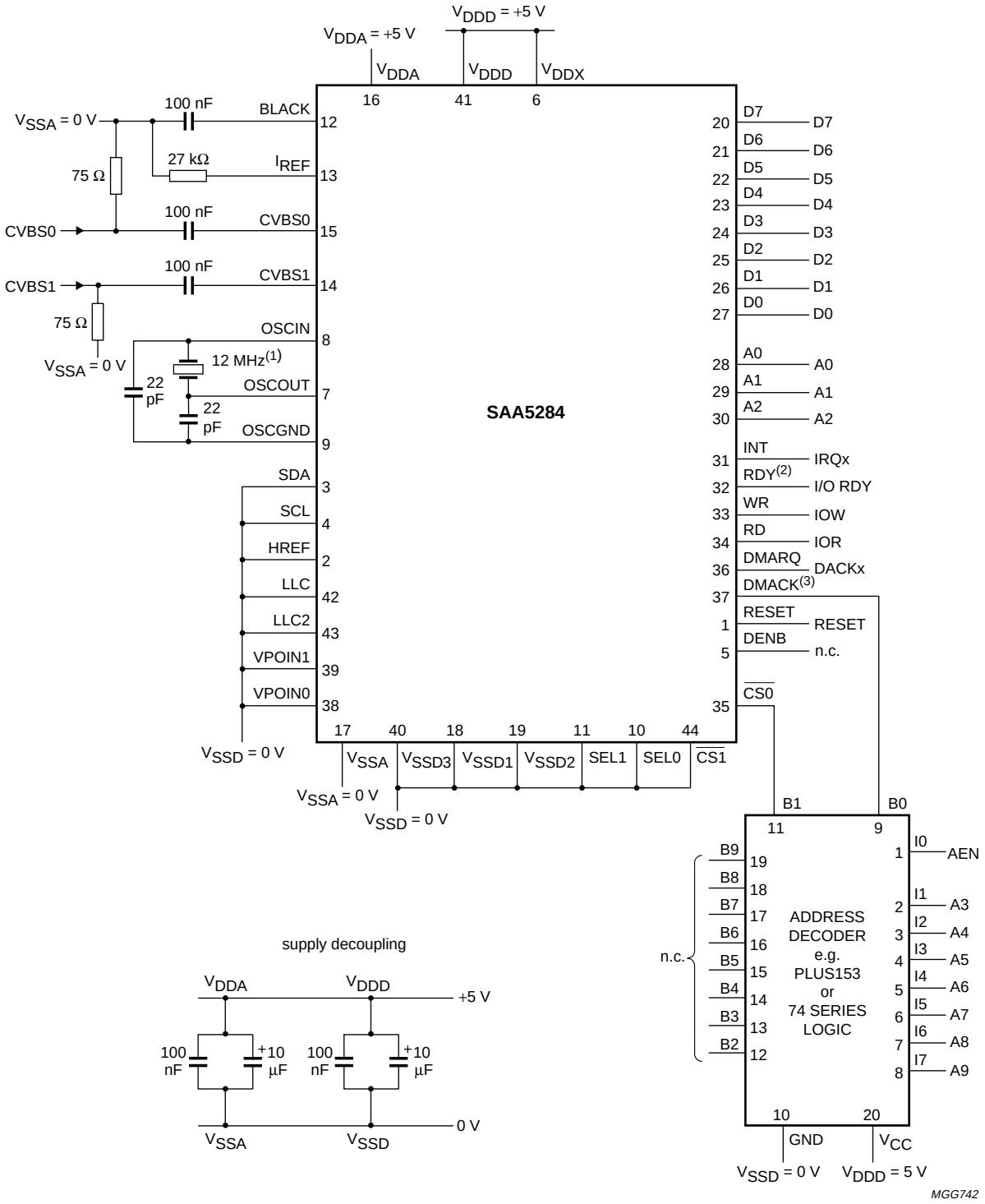


(1) Option of 13.5, 15 and 16 MHz or direct feed from external clock.

(2) A diode to $V_{DDD}$ is recommended for ESD protection.

(3) Pin DMACK must be connected to $V_{DDD}$ if DMA is not used.

Fig.10 Application circuit diagram for ISA card.

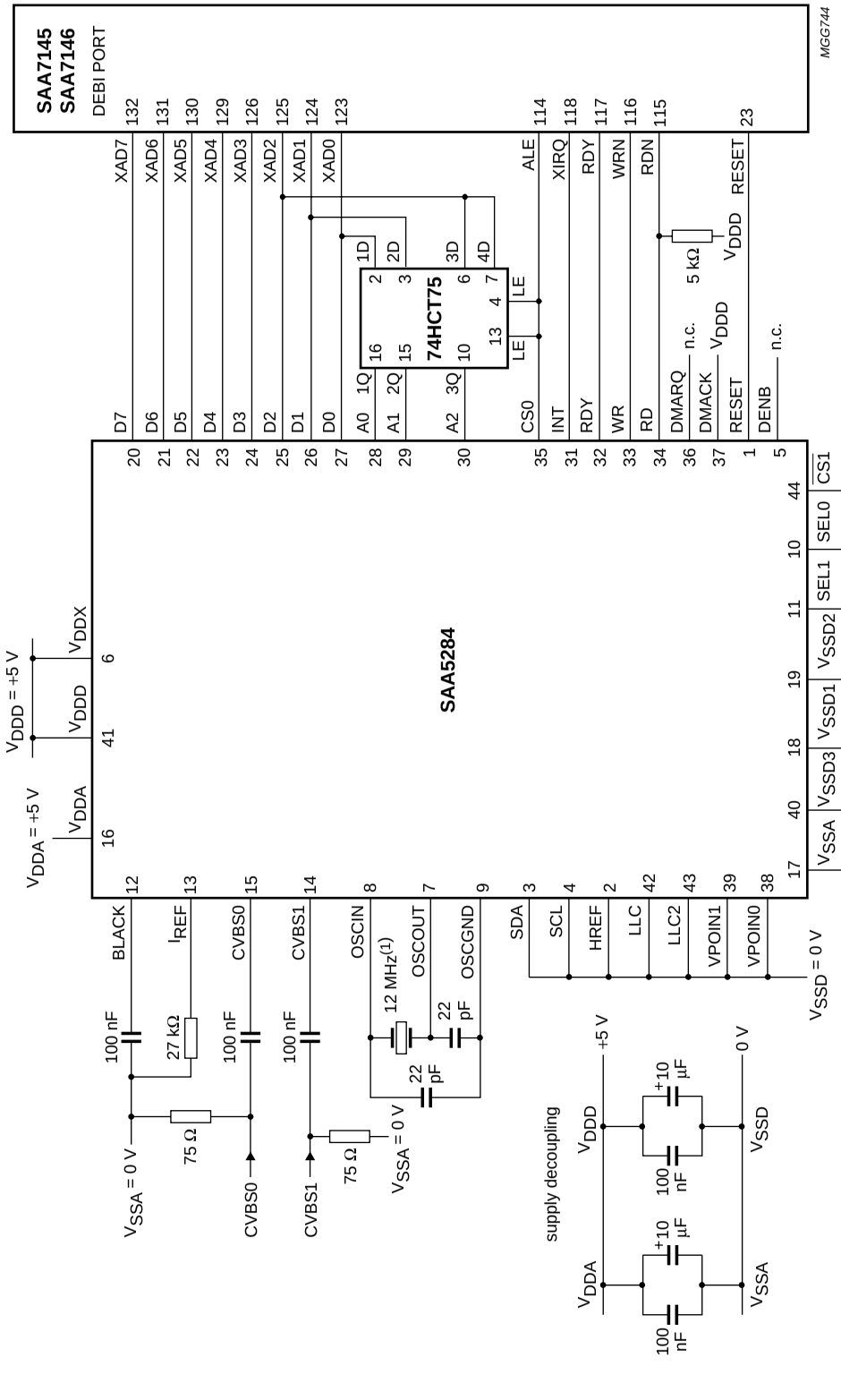


Fig.11 Application circuit diagram for PCI application.

(1) Option of 13.5, 15 and 16 MHz or LLC2 from the SAA7111 if in 13.5 MHz mode.

## 14 PACKAGE OUTLINE

**QFP44: plastic quad flat package; 44 leads (lead length 2.35 mm); body 14 x 14 x 2.2 mm** **SOT205-1**

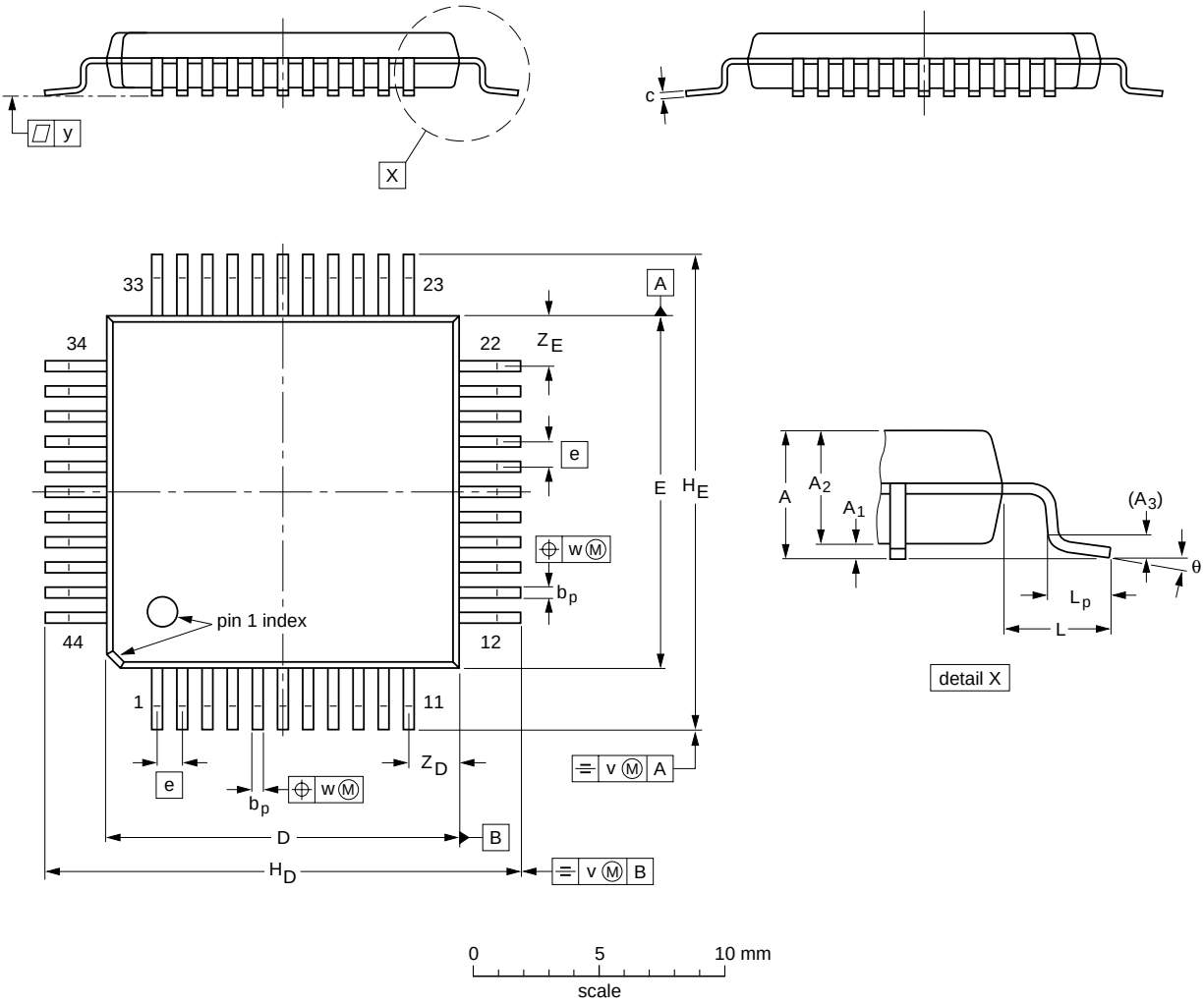


**DIMENSIONS (mm are the original dimensions)**

| UNIT | A max. | $A_1$ | $A_2$ | $A_3$ | $b_p$ | c | $D^{(1)}$ | $E^{(1)}$ | e | $H_D$ | $H_E$ | L | $L_p$ | v | w | y | $Z_D^{(1)}$ | $Z_E^{(1)}$ | θ |
|---|---|---|---|---|---|---|---|---|---|---|---|---|---|---|---|---|---|---|---|
| mm | 2.60 | 0.25<br>0.05 | 2.3<br>2.1 | 0.25 | 0.50<br>0.35 | 0.25<br>0.14 | 14.1<br>13.9 | 14.1<br>13.9 | 1 | 19.2<br>18.2 | 19.2<br>18.2 | 2.35 | 2.0<br>1.2 | 0.3 | 0.15 | 0.1 | 2.4<br>1.8 | 2.4<br>1.8 | $7^o$<br>$0^o$ |

**Note**

1. Plastic or metal protrusions of 0.25 mm maximum per side are not included.

| OUTLINE VERSION | REFERENCES | | | | EUROPEAN PROJECTION | ISSUE DATE |
|---|---|---|---|---|---|---|
| | IEC | JEDEC | EIAJ | | | |
| SOT205-1 | 133E01A | | | | | ~~95-02-04~~<br>97-08-01 |

## 15 SOLDERING

### 15.1 Introduction

There is no soldering method that is ideal for all IC packages. Wave soldering is often preferred when through-hole and surface mounted components are mixed on one printed-circuit board. However, wave soldering is not always suitable for surface mounted ICs, or for printed-circuits with high population densities. In these situations reflow soldering is often used.

This text gives a very brief insight to a complex technology. A more in-depth account of soldering ICs can be found in our *"IC Package Databook"* (order code 9398 652 90011).

### 15.2 Reflow soldering

Reflow soldering techniques are suitable for all QFP packages.

The choice of heating method may be influenced by larger plastic QFP packages (44 leads, or more). If infrared or vapour phase heating is used and the large packages are not absolutely dry (less than 0.1% moisture content by weight), vaporization of the small amount of moisture in them can cause cracking of the plastic body. For more information, refer to the Drypack chapter in our *"Quality Reference Handbook"* (order code 9397 750 00192).

Reflow soldering requires solder paste (a suspension of fine solder particles, flux and binding agent) to be applied to the printed-circuit board by screen printing, stencilling or pressure-syringe dispensing before package placement.

Several methods exist for reflowing; for example, infrared/convection heating in a conveyor type oven. Throughput times (preheating, soldering and cooling) vary between 50 and 300 seconds depending on heating method. Typical reflow peak temperatures range from 215 to 250 °C.

### 15.3 Wave soldering

Wave soldering is **not** recommended for QFP packages. This is because of the likelihood of solder bridging due to closely-spaced leads and the possibility of incomplete solder penetration in multi-lead devices.

| CAUTION |
| --- |
| **Wave soldering is NOT applicable for all QFP packages with a pitch (e) equal or less than 0.5 mm.** |

**If wave soldering cannot be avoided, for QFP packages with a pitch (e) larger than 0.5 mm, the following conditions must be observed:**

- **A double-wave (a turbulent wave with high upward pressure followed by a smooth laminar wave) soldering technique should be used.**
- **The footprint must be at an angle of 45° to the board direction and must incorporate solder thieves downstream and at the side corners.**

During placement and before soldering, the package must be fixed with a droplet of adhesive. The adhesive can be applied by screen printing, pin transfer or syringe dispensing. The package can be soldered after the adhesive is cured.

Maximum permissible solder temperature is 260 °C, and maximum duration of package immersion in solder is 10 seconds, if cooled to less than 150 °C within 6 seconds. Typical dwell time is 4 seconds at 250 °C.

A mildly-activated flux will eliminate the need for removal of corrosive residues in most applications.

### 15.4 Repairing soldered joints

Fix the component by first soldering two diagonally-opposite end leads. Use only a low voltage soldering iron (less than 24 V) applied to the flat part of the lead. Contact time must be limited to 10 seconds at up to 300 °C. When using a dedicated tool, all other leads can be soldered in one operation within 2 to 5 seconds between 270 and 320 °C.

## 16 DEFINITIONS

| **Data sheet status** | |
|---|---|
| Objective specification | This data sheet contains target or goal specifications for product development. |
| Preliminary specification | This data sheet contains preliminary data; supplementary data may be published later. |
| Product specification | This data sheet contains final product specifications. |
| **Limiting values** | |
| Limiting values given are in accordance with the Absolute Maximum Rating System (IEC 134). Stress above one or more of the limiting values may cause permanent damage to the device. These are stress ratings only and operation of the device at these or at any other conditions above those given in the Characteristics sections of the specification is not implied. Exposure to limiting values for extended periods may affect device reliability. | |
| **Application information** | |
| Where application information is given, it is advisory and does not form part of the specification. | |

## 17 LIFE SUPPORT APPLICATIONS

These products are not designed for use in life support appliances, devices, or systems where malfunction of these products can reasonably be expected to result in personal injury. Philips customers using or selling these products for use in such applications do so at their own risk and agree to fully indemnify Philips for any damages resulting from such improper use or sale.

## 18 PURCHASE OF PHILIPS I²C COMPONENTS

Purchase of Philips I²C components conveys a license under the Philips' I²C patent to use the components in the I²C system provided the system conforms to the I²C specification defined by Philips. This specification can be ordered using the code 9398 393 40011.

# *Philips Semiconductors – a worldwide company*


**Argentina:** see South America

**Australia:** 34 Waterloo Road, NORTH RYDE, NSW 2113,
Tel. +61 2 9805 4455, Fax. +61 2 9805 4466

**Austria:** Computerstr. 6, A-1101 WIEN, P.O. Box 213,
Tel. +43 1 60 101, Fax. +43 1 60 101 1210

**Belarus:** Hotel Minsk Business Center, Bld. 3, r. 1211, Volodarski Str. 6,
220050 MINSK, Tel. +375 172 200 733, Fax. +375 172 200 773

**Belgium:** see The Netherlands

**Brazil:** see South America

**Bulgaria:** Philips Bulgaria Ltd., Energoproject, 15th floor,
51 James Bourchier Blvd., 1407 SOFIA,
Tel. +359 2 689 211, Fax. +359 2 689 102

**Canada:** PHILIPS SEMICONDUCTORS/COMPONENTS,
Tel. +1 800 234 7381

**China/Hong Kong:** 501 Hong Kong Industrial Technology Centre,
72 Tat Chee Avenue, Kowloon Tong, HONG KONG,
Tel. +852 2319 7888, Fax. +852 2319 7700

**Colombia:** see South America

**Czech Republic:** see Austria

**Denmark:** Prags Boulevard 80, PB 1919, DK-2300 COPENHAGEN S,
Tel. +45 32 88 2636, Fax. +45 31 57 1949

**Finland:** Sinikalliontie 3, FIN-02630 ESPOO,
Tel. +358 9 615800, Fax. +358 9 61580/xxx

**France:** 4 Rue du Port-aux-Vins, BP317, 92156 SURESNES Cedex,
Tel. +33 1 40 99 6161, Fax. +33 1 40 99 6427

**Germany:** Hammerbrookstraße 69, D-20097 HAMBURG,
Tel. +49 40 23 53 60, Fax. +49 40 23 536 300

**Greece:** No. 15, 25th March Street, GR 17778 TAVROS/ATHENS,
Tel. +30 1 4894 339/239, Fax. +30 1 4814 240

**Hungary:** see Austria

**India:** Philips INDIA Ltd, Shivsagar Estate, A Block, Dr. Annie Besant Rd.
Worli, MUMBAI 400 018, Tel. +91 22 4938 541, Fax. +91 22 4938 722

**Indonesia:** see Singapore

**Ireland:** Newstead, Clonskeagh, DUBLIN 14,
Tel. +353 1 7640 000, Fax. +353 1 7640 200

**Israel:** RAPAC Electronics, 7 Kehilat Saloniki St, TEL AVIV 61180,
Tel. +972 3 645 0444, Fax. +972 3 649 1007

**Italy:** PHILIPS SEMICONDUCTORS, Piazza IV Novembre 3,
20124 MILANO, Tel. +39 2 6752 2531, Fax. +39 2 6752 2557

**Japan:** Philips Bldg 13-37, Kohnan 2-chome, Minato-ku, TOKYO 108,
Tel. +81 3 3740 5130, Fax. +81 3 3740 5077

**Korea:** Philips House, 260-199 Itaewon-dong, Yongsan-ku, SEOUL,
Tel. +82 2 709 1412, Fax. +82 2 709 1415

**Malaysia:** No. 76 Jalan Universiti, 46200 PETALING JAYA, SELANGOR,
Tel. +60 3 750 5214, Fax. +60 3 757 4880

**Mexico:** 5900 Gateway East, Suite 200, EL PASO, TEXAS 79905,
Tel. +9-5 800 234 7381

**Middle East:** see Italy

**Netherlands:** Postbus 90050, 5600 PB EINDHOVEN, Bldg. VB,
Tel. +31 40 27 82785, Fax. +31 40 27 88399

**New Zealand:** 2 Wagener Place, C.P.O. Box 1041, AUCKLAND,
Tel. +64 9 849 4160, Fax. +64 9 849 7811

**Norway:** Box 1, Manglerud 0612, OSLO,
Tel. +47 22 74 8000, Fax. +47 22 74 8341

**Philippines:** Philips Semiconductors Philippines Inc.,
106 Valero St. Salcedo Village, P.O. Box 2108 MCC, MAKATI,
Metro MANILA, Tel. +63 2 816 6380, Fax. +63 2 817 3474

**Poland:** Ul. Lukiska 10, PL 04-123 WARSZAWA,
Tel. +48 22 612 2831, Fax. +48 22 612 2327

**Portugal:** see Spain

**Romania:** see Italy

**Russia:** Philips Russia, Ul. Usatcheva 35A, 119048 MOSCOW,
Tel. +7 095 755 6918, Fax. +7 095 755 6919

**Singapore:** Lorong 1, Toa Payoh, SINGAPORE 1231,
Tel. +65 350 2538, Fax. +65 251 6500

**Slovakia:** see Austria

**Slovenia:** see Italy

**South Africa:** S.A. PHILIPS Pty Ltd., 195-215 Main Road Martindale,
2092 JOHANNESBURG, P.O. Box 7430 Johannesburg 2000,
Tel. +27 11 470 5911, Fax. +27 11 470 5494

**South America:** Rua do Rocio 220, 5th floor, Suite 51,
04552-903 São Paulo, SÃO PAULO - SP, Brazil,
Tel. +55 11 821 2333, Fax. +55 11 829 1849

**Spain:** Balmes 22, 08007 BARCELONA,
Tel. +34 3 301 6312, Fax. +34 3 301 4107

**Sweden:** Kottbygatan 7, Akalla, S-16485 STOCKHOLM,
Tel. +46 8 632 2000, Fax. +46 8 632 2745

**Switzerland:** Allmendstrasse 140, CH-8027 ZÜRICH,
Tel. +41 1 488 2686, Fax. +41 1 481 7730

**Taiwan:** Philips Semiconductors, 6F, No. 96, Chien Kuo N. Rd., Sec. 1,
TAIPEI, Taiwan Tel. +886 2 2134 2870, Fax. +886 2 2134 2874

**Thailand:** PHILIPS ELECTRONICS (THAILAND) Ltd.,
209/2 Sanpavuth-Bangna Road Prakanong, BANGKOK 10260,
Tel. +66 2 745 4090, Fax. +66 2 398 0793

**Turkey:** Talatpasa Cad. No. 5, 80640 GÜLTEPE/ISTANBUL,
Tel. +90 212 279 2770, Fax. +90 212 282 6707

**Ukraine**: PHILIPS UKRAINE, 4 Patrice Lumumba str., Building B, Floor 7,
252042 KIEV, Tel. +380 44 264 2776, Fax. +380 44 268 0461

**United Kingdom:** Philips Semiconductors Ltd., 276 Bath Road, Hayes,
MIDDLESEX UB3 5BX, Tel. +44 181 730 5000, Fax. +44 181 754 8421

**United States:** 811 East Arques Avenue, SUNNYVALE, CA 94088-3409,
Tel. +1 800 234 7381

**Uruguay:** see South America

**Vietnam:** see Singapore

**Yugoslavia:** PHILIPS, Trg N. Pasica 5/v, 11000 BEOGRAD,
Tel. +381 11 625 344, Fax.+381 11 635 777

**For all other countries apply to:** Philips Semiconductors, Marketing & Sales Communications,
Building BE-p, P.O. Box 218, 5600 MD EINDHOVEN, The Netherlands, Fax. +31 40 27 24825

**Internet:** http://www.semiconductors.philips.com



© Philips Electronics N.V. 1997 SCA53

All rights are reserved. Reproduction in whole or in part is prohibited without the prior written consent of the copyright owner.

The information presented in this document does not form part of any quotation or contract, is believed to be accurate and reliable and may be changed without notice. No liability will be accepted by the publisher for any consequence of its use. Publication thereof does not convey nor imply any license under patent- or other industrial or intellectual property rights.



Printed in The Netherlands 655102/00/02/pp24 Date of release: 1998 Feb 05 Document order number: 9397 750 02768


*Let's make things better.*

**Philips Semiconductors**

PHILIPS