SA612A

Double-balanced mixer and oscillator

Rev. 3 — 4 June 2014 Product data sheet

1. General description

The SA612A is a low-power VHF monolithic double-balanced mixer with on-board oscillator and voltage regulator. It is intended for low cost, low-power communication systems with signal frequencies to 500 MHz and local oscillator frequencies as high as 200 MHz. The mixer is a ‘Gilbert cell’ multiplier configuration that provides gain of 14 dB or more at 45 MHz.

The oscillator can be configured for a crystal, a tuned tank operation, or as a buffer for an external LO. Noise figure at 45 MHz is typically below 6 dB and makes the device well-suited for high-performance cordless phone/cellular radio. The low power consumption makes the SA612A excellent for battery-operated equipment. Networking and other communications products can benefit from very low radiated energy levels within systems. The SA612A is available in an 8-lead SO (surface-mounted miniature package).

2. Features and benefits

- Low current consumption
- Low cost
- Operation to 500 MHz
- Low radiated energy
- Low external parts count; suitable for crystal/ceramic filter
- Excellent sensitivity, gain, and noise figure

3. Applications

- Cordless telephone
- Portable radio
- VHF transceivers
- RF data links
- Sonobuoys
- Communications receivers
- Broadband LANs
- HF and VHF frequency conversion
- Cellular radio mixer/oscillator

4. Ordering information

Table 1. Ordering information

Type number	Topside marking	Package		
		Name	Description	Version
SA612AD/01	SA612A	SO8	plastic small outline package; 8 leads; body width 3.9 mm	SOT96-1

4.1 Ordering options

Table 2. Ordering options

Type number	Orderable part number	Package	Packing method	Minimum order quantity	Temperature
SA612AD/01	SA612AD/01,112	SO8	Standard marking *IC's tube - DSC bulk pack	2000	T_{amb} = −40 °C to +85 °C
	SA612AD/01,118	SO8	Reel 13" Q1/T1 *Standard mark SMD	2500	T_{amb} = −40 °C to +85 °C

5. Block diagram

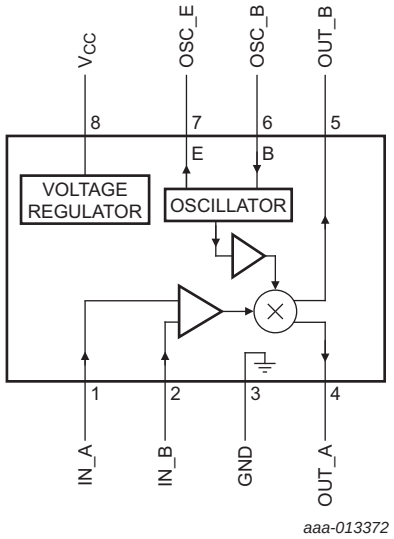

Fig 1. Block diagram

All information provided in this document is subject to legal disclaimers.

© NXP Semiconductors N.V. 2014. All rights reserved.

6. Pinning information

6.1 Pinning

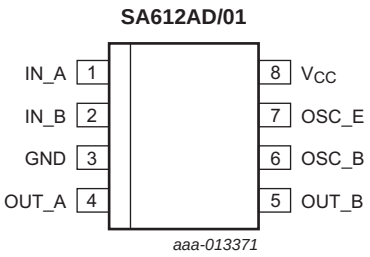

Fig 2. Pin configuration for SO8

6.2 Pin description

Table 3. Pin description

Symbol	Pin	Description
IN_A	1	RF input A
IN_B	2	RF input B
GND	3	ground
OUT_A	4	mixer output A
OUT_B	5	mixer output B
OSC_B	6	oscillator input (base)
OSC_E	7	oscillator output (emitter)
V_{CC}	8	supply voltage

All information provided in this document is subject to legal disclaimers.

© NXP Semiconductors N.V. 2014. All rights reserved.

7. Functional description

The SA612A is a Gilbert cell, an oscillator/buffer, and a temperature-compensated bias network as shown in Figure 3. The Gilbert cell is a differential amplifier (IN_A and IN_B pins) that drives a balanced switching cell. The differential input stage provides gain and determines the noise figure and signal handling performance of the system.

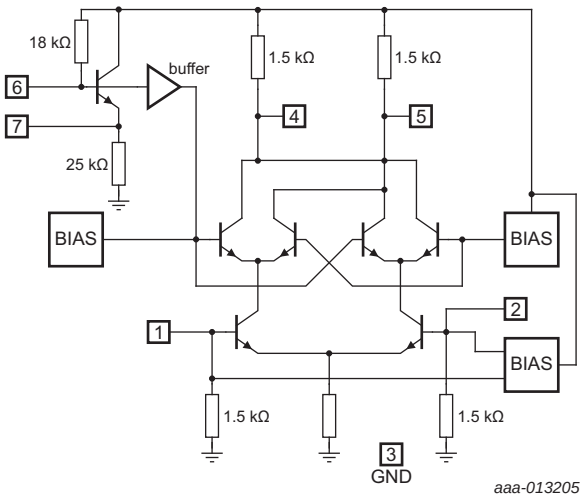

Fig 3. Equivalent circuit

The SA612A is designed for optimum low-power performance. When used with the SA614A as a 45 MHz cordless phone/cellular radio second IF and demodulator, the SA612A is capable of receiving −119 dBm signals with a 12 dB S/N ratio. Third-order intercept is typically −15 dBm (that is approximately +5 dBm output intercept because of the RF gain). The system designer must be cognizant of this large signal limitation. When designing LANs or other closed systems where transmission levels are high, and small-signal or signal-to-noise issues are not critical, the input to the SA612A should be appropriately scaled.

Besides excellent low-power performance well into VHF, the SA612A is flexible. The input, output and oscillator ports support various configurations provided the designer understands certain constraints, which are explained here.

The RF inputs (IN_A and IN_B pins) are biased internally. They are symmetrical. The equivalent AC input impedance is approximately 1.5 kΩ || 3 pF through 50 MHz. IN_A and IN_B pins can be used interchangeably, but they should not be DC biased externally. Figure 4 shows three typical input configurations.

All information provided in this document is subject to legal disclaimers.

© NXP Semiconductors N.V. 2014. All rights reserved.

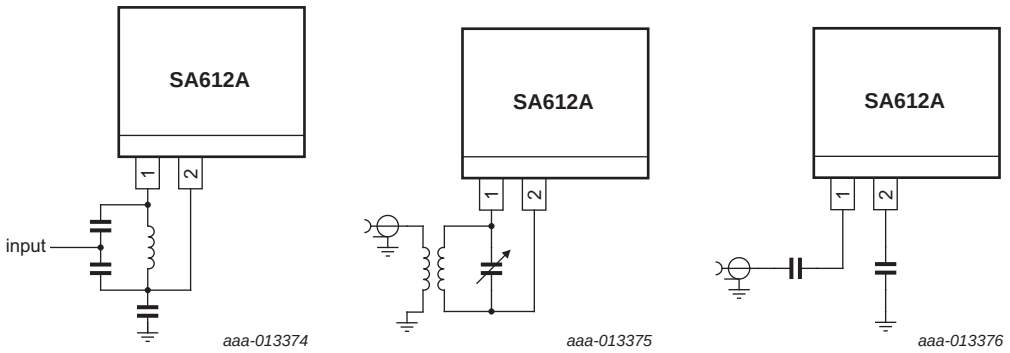

a. Single-ended tuned input

b. Balanced input (for attenuation of second-order products)

c. Single-ended untuned input

Fig 4. Input configuration

The mixer outputs (OUT_A and OUT_B pins) are also internally biased. Each output is connected to the internal positive supply by a 1.5 kΩ resistor. This permits direct output termination yet allows for balanced output as well. Figure 5 shows three single-ended output configurations and a balanced output.

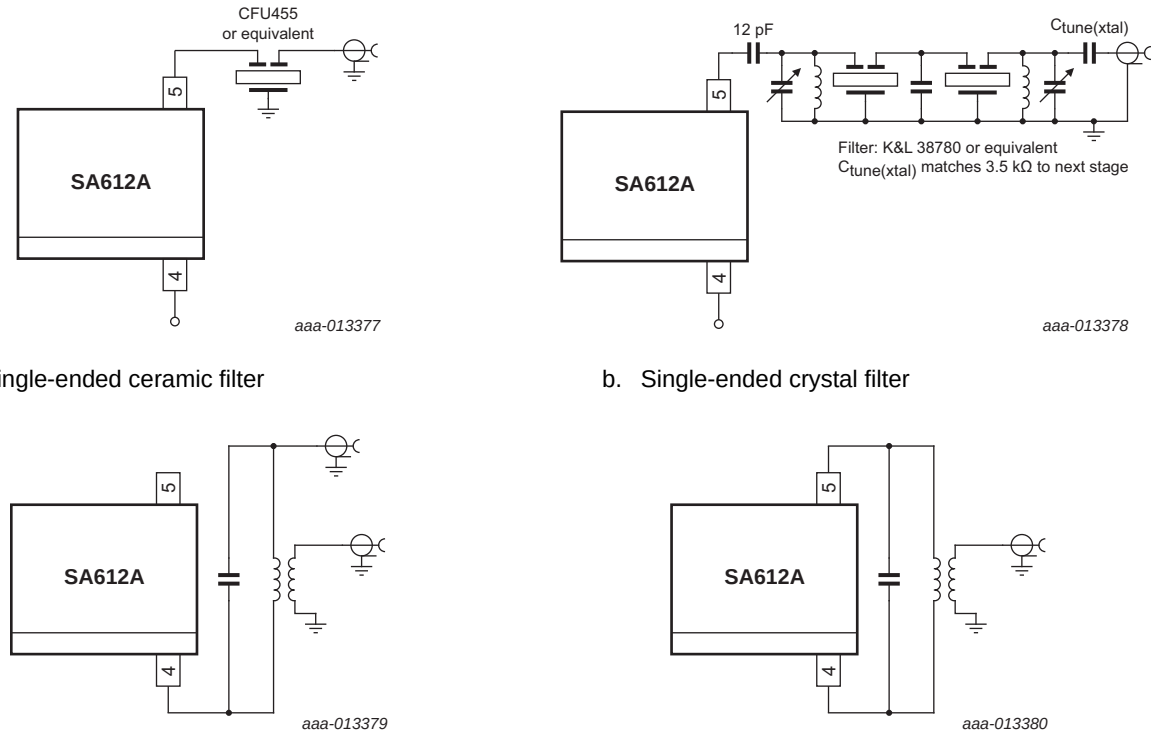

a. Single-ended ceramic filter

b. Single-ended crystal filter

c. Single-ended IFT

d. Balanced output

Fig 5. Output configuration

All information provided in this document is subject to legal disclaimers.

© NXP Semiconductors N.V. 2014. All rights reserved.

The oscillator can sustain oscillation beyond 200 MHz in crystal or tuned tank configurations. The upper limit of operation is determined by tank 'Q' and required drive levels. The higher the 'Q' of the tank or the smaller the required drive, the higher the permissible oscillation frequency. If the required LO is beyond oscillation limits, or the system calls for an external LO, the external signal can be injected at OSC_B (pin 6) through a DC blocking capacitor. External LO should be 200 mV (peak-to-peak) minimum up to 300 mV (peak-to-peak) maximum.

Figure 6 shows several proven oscillator circuits. Figure 6a is appropriate for cordless phones or cellular radio. As shown, an overtone mode of operation is utilized. Capacitor C3 and inductor L1 act as a fundamental trap. In fundamental mode oscillation, the trap is omitted.

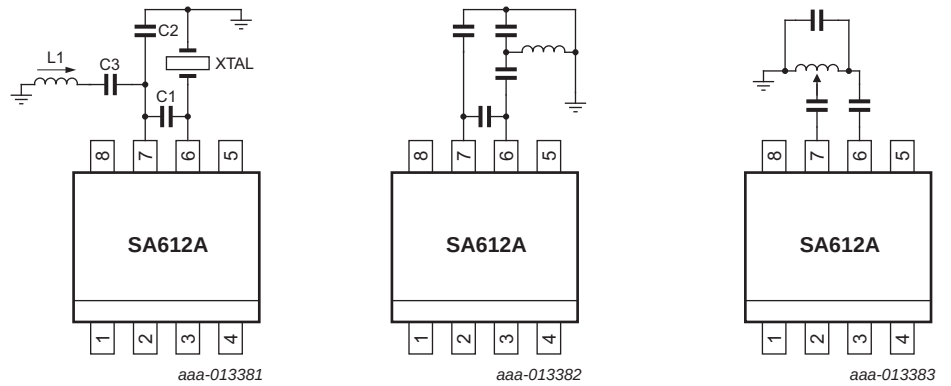

a. Colpitts crystal oscillator (overtone mode)

b. Colpitts L/C tank oscillator

c. Hartley L/C tank oscillator

Fig 6. Oscillator circuits

Figure 7 shows a Colpitts varactor tuned tank oscillator suitable for synthesizer-controlled applications. It is important to buffer the output of this circuit to assure that switching spikes from the first counter or prescaler do not end up in the oscillator spectrum. The dual-gate MOSFET provides optimum isolation with low current. The FET offers good isolation, simplicity, and low current, while the bipolar transistors provide the simple solution for non-critical applications. The resistive divider in the emitter-follower circuit should be chosen to provide the minimum input signal that assures correct system operation.

All information provided in this document is subject to legal disclaimers.

© NXP Semiconductors N.V. 2014. All rights reserved.

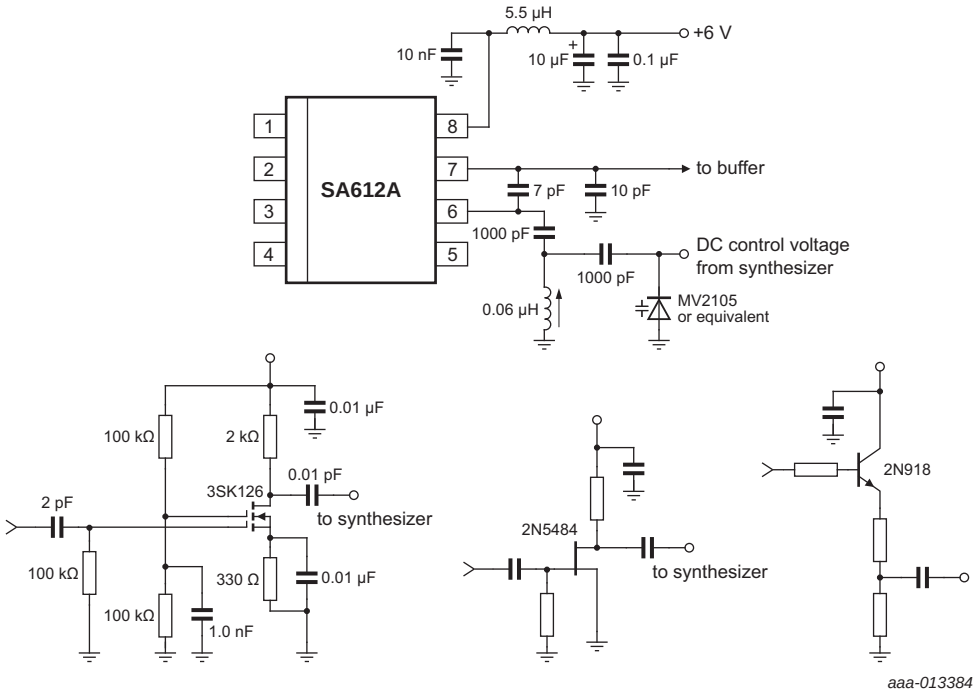

Fig 7. Colpitts oscillator suitable for synthesizer applications and typical buffers

8. Application design-in information

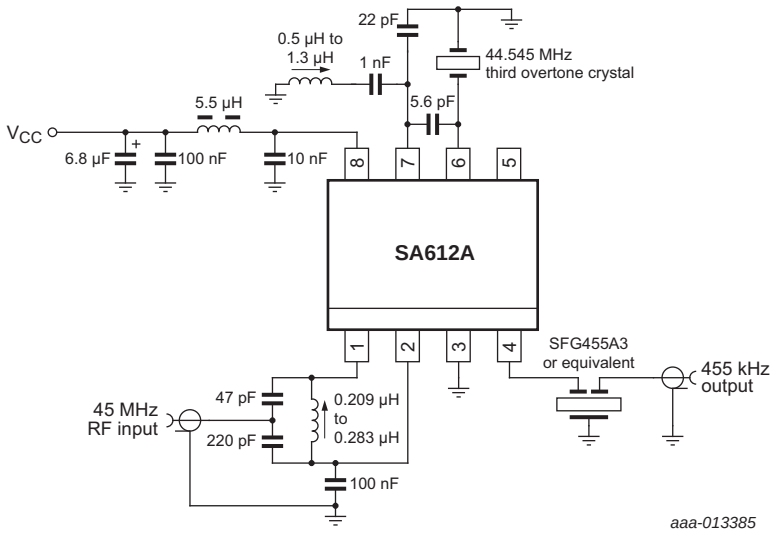

Fig 8. Typical application for cordless/cellular radio

All information provided in this document is subject to legal disclaimers.

© NXP Semiconductors N.V. 2014. All rights reserved.

9. Limiting values

Table 4. Limiting values

In accordance with the Absolute Maximum Rating System (IEC 60134).

Symbol	Parameter	Conditions	Min	Max	Unit
V_{CC}	supply voltage		-	9	V
T_{stg}	storage temperature		–65	+150	°C
T_{amb}	ambient temperature	operating	–40	+85	°C

10. Static characteristics

Table 5. Static characteristics

T_{amb} = 25 °C; V_{CC} = +6 V; unless specified otherwise. Refer to Figure 15.

Symbol	Parameter	Conditions	Min	Typ	Max	Unit
V_{CC}	supply voltage		4.5	-	8.0	V
I_{CC}	supply current		-	2.4	3.0	mA

11. Dynamic characteristics

Table 6. Dynamic characteristics

T_{amb} = 25 °C; V_{CC} = +6 V; unless specified otherwise. Refer to Figure 15.

Symbol	Parameter	Conditions	Min	Typ	Max	Unit
f_i	input frequency		-	500	-	MHz
f_{osc}	oscillator frequency		-	200	-	MHz
NF	noise figure	at 45 MHz	-	5.0	-	dB
$IP3_i$	input third-order intercept point	RF input = –45 dBm; RF1 = 45.0 MHz; RF2 = 45.06 MHz	-	–13	-	dBm
G_{conv}	conversion gain	at 45 MHz	14	17	-	dB
$R_{i(RF)}$	RF input resistance		1.5	-	-	kΩ
$C_{i(RF)}$	RF input capacitance		-	3	-	pF
$R_{o(mix)}$	mixer output resistance	OUT_A, OUT_B pins	-	1.5	-	kΩ

All information provided in this document is subject to legal disclaimers.

© NXP Semiconductors N.V. 2014. All rights reserved.

12. Performance curves

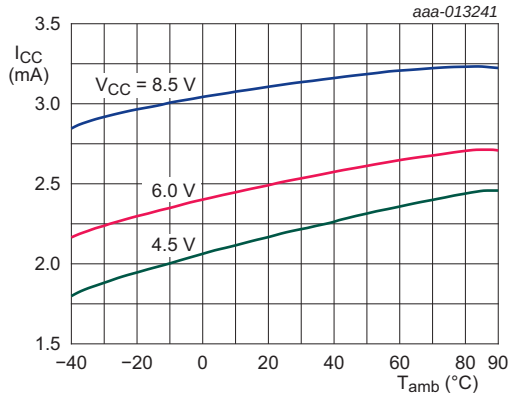

Fig 9. Supply current versus temperature

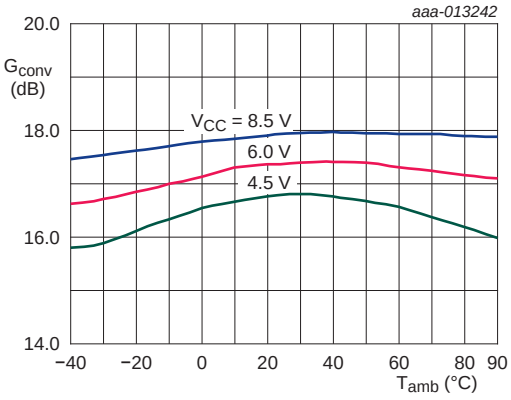

Fig 10. Conversion gain versus temperature

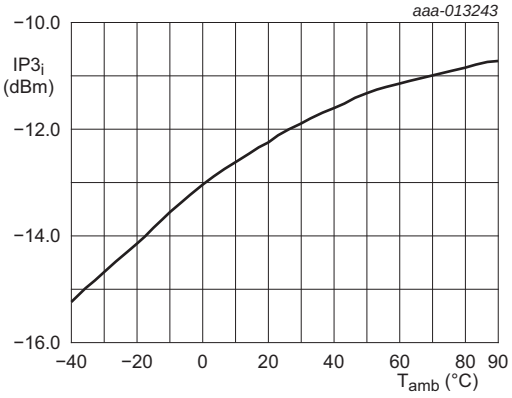

Fig 11. Third-order intercept point versus temperature

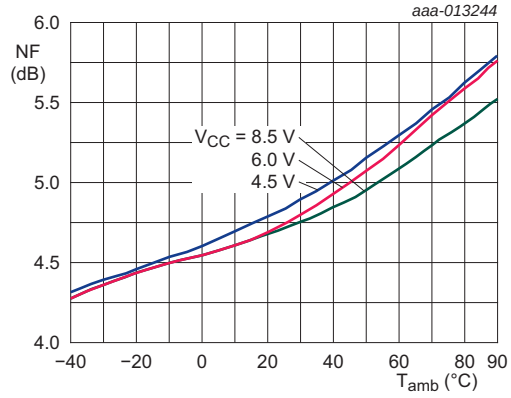

Fig 12. Noise Figure versus temperature

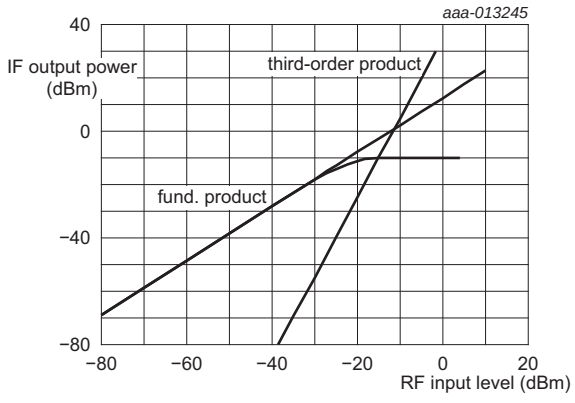

RF1 = 45 MHz; IF = 455 kHz; RF2 = 45.06 MHz

Fig 13. Third-order intercept and compression

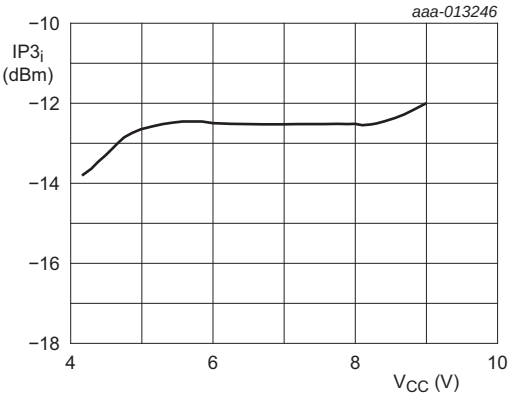

Fig 14. Input third-order intercept point versus supply voltage

All information provided in this document is subject to legal disclaimers.

© NXP Semiconductors N.V. 2014. All rights reserved.

13. Test information

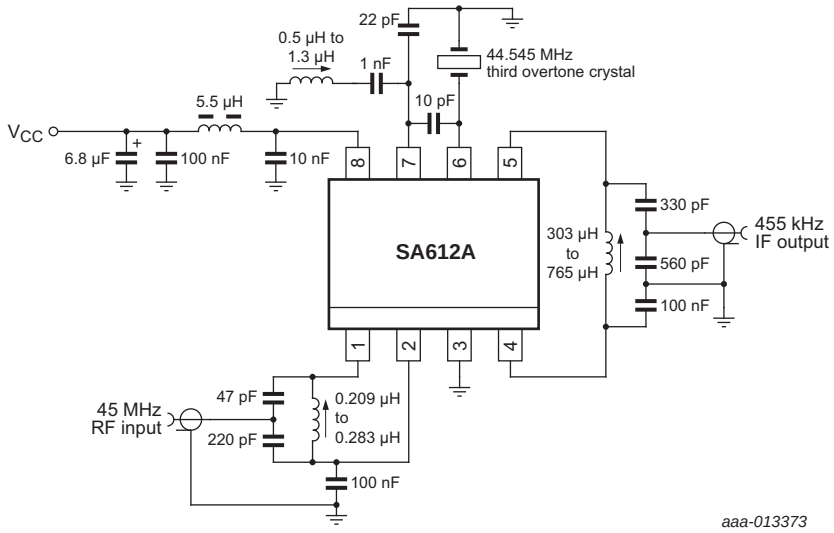

Fig 15. Test configuration

All information provided in this document is subject to legal disclaimers.

© NXP Semiconductors N.V. 2014. All rights reserved.

14. Package outline

SO8: plastic small outline package; 8 leads; body width 3.9 mm **SOT96-1**

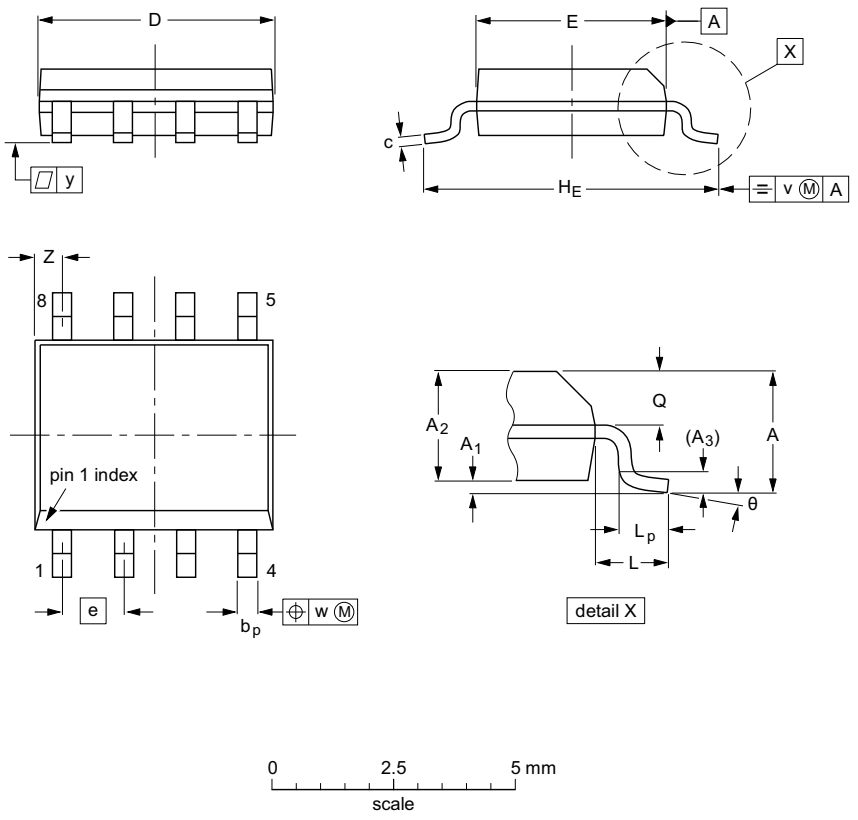

DIMENSIONS (inch dimensions are derived from the original mm dimensions)

UNIT	A max.	A_1	A_2	A_3	b_p	c	$D^{(1)}$	$E^{(2)}$	e	H_E	L	L_p	Q	v	w	y	$Z^{(1)}$	θ
mm	1.75	0.25 0.10	1.45 1.25	0.25	0.49 0.36	0.25 0.19	5.0 4.8	4.0 3.8	1.27	6.2 5.8	1.05	1.0 0.4	0.7 0.6	0.25	0.25	0.1	0.7 0.3	8° 0°
inches	0.069	0.010 0.004	0.057 0.049	0.01	0.019 0.014	0.0100 0.0075	0.20 0.19	0.16 0.15	0.05	0.244 0.228	0.041	0.039 0.016	0.028 0.024	0.01	0.01	0.004	0.028 0.012	

Notes

1. Plastic or metal protrusions of 0.15 mm (0.006 inch) maximum per side are not included.
2. Plastic or metal protrusions of 0.25 mm (0.01 inch) maximum per side are not included.

OUTLINE VERSION	REFERENCES				EUROPEAN PROJECTION	ISSUE DATE
	IEC	JEDEC	JEITA			
SOT96-1	076E03	MS-012				~~99-12-27~~ 03-02-18

Fig 16. Package outline SOT96-1 (SO8)

All information provided in this document is subject to legal disclaimers.

© NXP Semiconductors N.V. 2014. All rights reserved.

15. Soldering of SMD packages

This text provides a very brief insight into a complex technology. A more in-depth account of soldering ICs can be found in Application Note *AN10365 "Surface mount reflow soldering description"*.

15.1 Introduction to soldering

Soldering is one of the most common methods through which packages are attached to Printed Circuit Boards (PCBs), to form electrical circuits. The soldered joint provides both the mechanical and the electrical connection. There is no single soldering method that is ideal for all IC packages. Wave soldering is often preferred when through-hole and Surface Mount Devices (SMDs) are mixed on one printed wiring board; however, it is not suitable for fine pitch SMDs. Reflow soldering is ideal for the small pitches and high densities that come with increased miniaturization.

15.2 Wave and reflow soldering

Wave soldering is a joining technology in which the joints are made by solder coming from a standing wave of liquid solder. The wave soldering process is suitable for the following:

- Through-hole components
- Leaded or leadless SMDs, which are glued to the surface of the printed circuit board

Not all SMDs can be wave soldered. Packages with solder balls, and some leadless packages which have solder lands underneath the body, cannot be wave soldered. Also, leaded SMDs with leads having a pitch smaller than ~0.6 mm cannot be wave soldered, due to an increased probability of bridging.

The reflow soldering process involves applying solder paste to a board, followed by component placement and exposure to a temperature profile. Leaded packages, packages with solder balls, and leadless packages are all reflow solderable.

Key characteristics in both wave and reflow soldering are:

- Board specifications, including the board finish, solder masks and vias
- Package footprints, including solder thieves and orientation
- The moisture sensitivity level of the packages
- Package placement
- Inspection and repair
- Lead-free soldering versus SnPb soldering

15.3 Wave soldering

Key characteristics in wave soldering are:

- Process issues, such as application of adhesive and flux, clinching of leads, board transport, the solder wave parameters, and the time during which components are exposed to the wave
- Solder bath specifications, including temperature and impurities

All information provided in this document is subject to legal disclaimers.

© NXP Semiconductors N.V. 2014. All rights reserved.

15.4 Reflow soldering

Key characteristics in reflow soldering are:

- Lead-free versus SnPb soldering; note that a lead-free reflow process usually leads to higher minimum peak temperatures (see Figure 17) than a SnPb process, thus reducing the process window
- Solder paste printing issues including smearing, release, and adjusting the process window for a mix of large and small components on one board
- Reflow temperature profile; this profile includes preheat, reflow (in which the board is heated to the peak temperature) and cooling down. It is imperative that the peak temperature is high enough for the solder to make reliable solder joints (a solder paste characteristic). In addition, the peak temperature must be low enough that the packages and/or boards are not damaged. The peak temperature of the package depends on package thickness and volume and is classified in accordance with Table 7 and 8

Table 7. SnPb eutectic process (from J-STD-020D)

Package thickness (mm)	Package reflow temperature (°C)	
	Volume (mm^3)	
	< 350	≥ 350
< 2.5	235	220
≥ 2.5	220	220

Table 8. Lead-free process (from J-STD-020D)

Package thickness (mm)	Package reflow temperature (°C)		
	Volume (mm^3)		
	< 350	350 to 2000	> 2000
< 1.6	260	260	260
1.6 to 2.5	260	250	245
> 2.5	250	245	245

Moisture sensitivity precautions, as indicated on the packing, must be respected at all times.

Studies have shown that small packages reach higher temperatures during reflow soldering, see Figure 17.

All information provided in this document is subject to legal disclaimers.

© NXP Semiconductors N.V. 2014. All rights reserved.

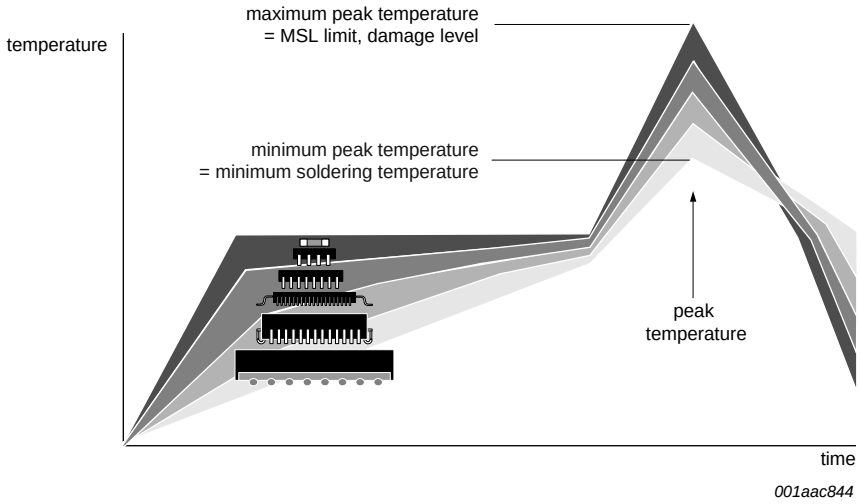

MSL: Moisture Sensitivity Level

Fig 17. Temperature profiles for large and small components

For further information on temperature profiles, refer to Application Note *AN10365 "Surface mount reflow soldering description"*.

16. Soldering: PCB footprints

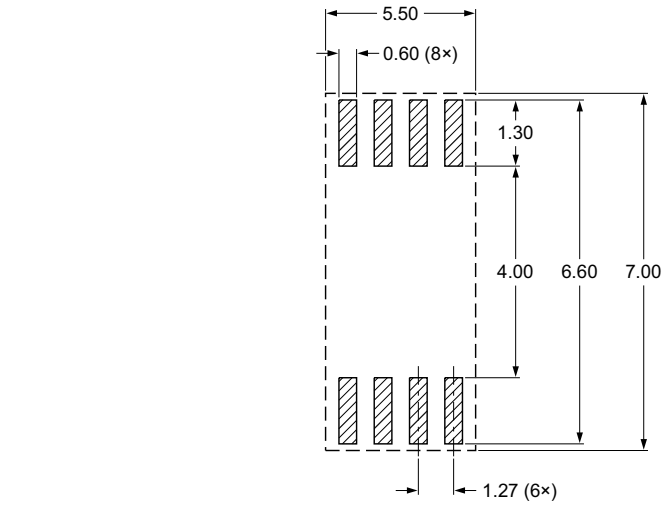

Fig 18. PCB footprint for SOT96-1 (SO8); reflow soldering

All information provided in this document is subject to legal disclaimers.

© NXP Semiconductors N.V. 2014. All rights reserved.

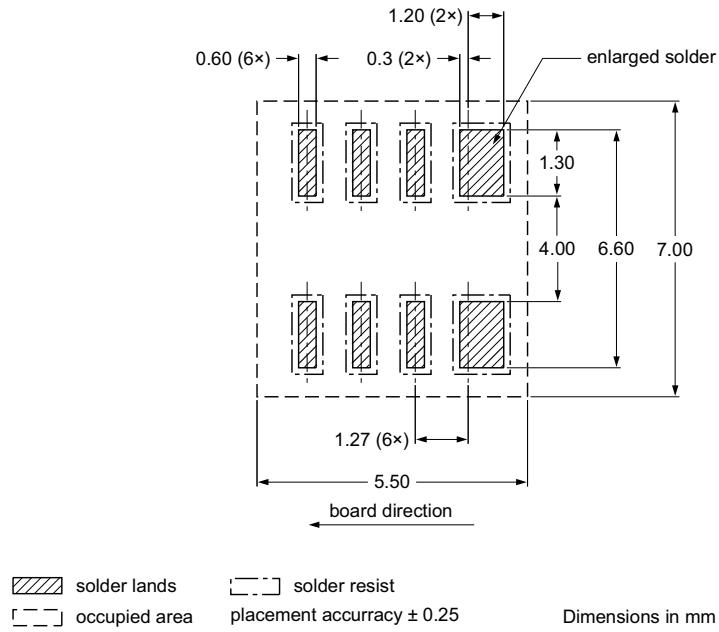

Fig 19. PCB footprint for SOT96-1 (SO8); wave soldering

17. Abbreviations

Table 9. Abbreviations

Acronym	Description
FET	Field-Effect Transistor
HF	High Frequency
IF	Intermediate Frequency
LAN	Local Area Network
LO	Local Oscillator
MOSFET	Metal-Oxide Semiconductor Field-Effect Transistor
RF	Radio Frequency
S/N	Signal-to-Noise ratio
VHF	Very High Frequency

All information provided in this document is subject to legal disclaimers.

© NXP Semiconductors N.V. 2014. All rights reserved.

18. Revision history

Table 10. Revision history

Document ID	Release date	Data sheet status	Change notice	Supersedes
SA612A v.3	20140604	Product data sheet	-	SA612A v.2
Modifications:	• The format of this data sheet has been redesigned to comply with the new identity guidelines of NXP Semiconductors. • Legal texts have been adapted to the new company name where appropriate. • Section 1 “General description”, last sentence: deleted “8-lead dual in-line plastic package” • Table 1 “Ordering information”: – Type number SA612AN (DIP8 package, SOT97-1 package outline) is discontinued and removed from this data sheet – Type number changed from “SA612AD” to “SA612AD/01” • Added Section 4.1 “Ordering options” • Figure 2 “Pin configuration for SO8”, pin names are updated: – Pin 1: from “INPUT A” to “IN_A” – Pin 2: from “INPUT B” to “IN_B” – Pin 4: from “OUTPUT A” to “OUT_A” – Pin 5: from “OUTPUT B” to “OUT_B” – Pin 6: from “OSCILLATOR” to “OSC_B” – Pin 7: from “OSCILLATOR” to “OSC_E” • Added Section 6.2 “Pin description” • Section 7 “Functional description”, seventh paragraph, second sentence changed from “In this circuit, a third overtone parallel-mode crystal with approximately 5 pF load capacitance should be specified.” to “As shown, an overtone mode of operation is utilized.” • Figure 7 “Colpitts oscillator suitable for synthesizer applications and typical buffers”: capacitor value corrected from “0.10 pF” to “10 nF” (above pin 8) • Old table “AC/DC electrical characteristics” split into Table 5 “Static characteristics” and Table 6 “Dynamic characteristics” • Table 6 “Dynamic characteristics”, Conditions for $IP3_i$, input third-order intercept point, updated from “at 45 MHz; RF input = –45 dBm” to “” • Package outline SOT97-1 (DIP8) is deleted • Added soldering information • Added Section 16 “Soldering: PCB footprints” • Added Section 17 “Abbreviations”			
SA612A v.2	19971107	Product specification	853-0391 18662	NE/SA612A v.1
NE/SA612A v.1	19900917	Product specification	853-0391 00446	-

All information provided in this document is subject to legal disclaimers.

© NXP Semiconductors N.V. 2014. All rights reserved.

19. Legal information

19.1 Data sheet status

Document status[1][2]	Product status[3]	Definition
Objective [short] data sheet	Development	This document contains data from the objective specification for product development.
Preliminary [short] data sheet	Qualification	This document contains data from the preliminary specification.
Product [short] data sheet	Production	This document contains the product specification.

[1] Please consult the most recently issued document before initiating or completing a design.

[2] The term 'short data sheet' is explained in section "Definitions".

[3] The product status of device(s) described in this document may have changed since this document was published and may differ in case of multiple devices. The latest product status information is available on the Internet at URL http://www.nxp.com.

19.2 Definitions

Draft — The document is a draft version only. The content is still under internal review and subject to formal approval, which may result in modifications or additions. NXP Semiconductors does not give any representations or warranties as to the accuracy or completeness of information included herein and shall have no liability for the consequences of use of such information.

Short data sheet — A short data sheet is an extract from a full data sheet with the same product type number(s) and title. A short data sheet is intended for quick reference only and should not be relied upon to contain detailed and full information. For detailed and full information see the relevant full data sheet, which is available on request via the local NXP Semiconductors sales office. In case of any inconsistency or conflict with the short data sheet, the full data sheet shall prevail.

Product specification — The information and data provided in a Product data sheet shall define the specification of the product as agreed between NXP Semiconductors and its customer, unless NXP Semiconductors and customer have explicitly agreed otherwise in writing. In no event however, shall an agreement be valid in which the NXP Semiconductors product is deemed to offer functions and qualities beyond those described in the Product data sheet.

19.3 Disclaimers

Limited warranty and liability — Information in this document is believed to be accurate and reliable. However, NXP Semiconductors does not give any representations or warranties, expressed or implied, as to the accuracy or completeness of such information and shall have no liability for the consequences of use of such information. NXP Semiconductors takes no responsibility for the content in this document if provided by an information source outside of NXP Semiconductors.

In no event shall NXP Semiconductors be liable for any indirect, incidental, punitive, special or consequential damages (including - without limitation - lost profits, lost savings, business interruption, costs related to the removal or replacement of any products or rework charges) whether or not such damages are based on tort (including negligence), warranty, breach of contract or any other legal theory.

Notwithstanding any damages that customer might incur for any reason whatsoever, NXP Semiconductors' aggregate and cumulative liability towards customer for the products described herein shall be limited in accordance with the *Terms and conditions of commercial sale* of NXP Semiconductors.

Right to make changes — NXP Semiconductors reserves the right to make changes to information published in this document, including without limitation specifications and product descriptions, at any time and without notice. This document supersedes and replaces all information supplied prior to the publication hereof.

Suitability for use — NXP Semiconductors products are not designed, authorized or warranted to be suitable for use in life support, life-critical or safety-critical systems or equipment, nor in applications where failure or malfunction of an NXP Semiconductors product can reasonably be expected to result in personal injury, death or severe property or environmental damage. NXP Semiconductors and its suppliers accept no liability for inclusion and/or use of NXP Semiconductors products in such equipment or applications and therefore such inclusion and/or use is at the customer's own risk.

Applications — Applications that are described herein for any of these products are for illustrative purposes only. NXP Semiconductors makes no representation or warranty that such applications will be suitable for the specified use without further testing or modification.

Customers are responsible for the design and operation of their applications and products using NXP Semiconductors products, and NXP Semiconductors accepts no liability for any assistance with applications or customer product design. It is customer's sole responsibility to determine whether the NXP Semiconductors product is suitable and fit for the customer's applications and products planned, as well as for the planned application and use of customer's third party customer(s). Customers should provide appropriate design and operating safeguards to minimize the risks associated with their applications and products.

NXP Semiconductors does not accept any liability related to any default, damage, costs or problem which is based on any weakness or default in the customer's applications or products, or the application or use by customer's third party customer(s). Customer is responsible for doing all necessary testing for the customer's applications and products using NXP Semiconductors products in order to avoid a default of the applications and the products or of the application or use by customer's third party customer(s). NXP does not accept any liability in this respect.

Limiting values — Stress above one or more limiting values (as defined in the Absolute Maximum Ratings System of IEC 60134) will cause permanent damage to the device. Limiting values are stress ratings only and (proper) operation of the device at these or any other conditions above those given in the Recommended operating conditions section (if present) or the Characteristics sections of this document is not warranted. Constant or repeated exposure to limiting values will permanently and irreversibly affect the quality and reliability of the device.

Terms and conditions of commercial sale — NXP Semiconductors products are sold subject to the general terms and conditions of commercial sale, as published at http://www.nxp.com/profile/terms, unless otherwise agreed in a valid written individual agreement. In case an individual agreement is concluded only the terms and conditions of the respective agreement shall apply. NXP Semiconductors hereby expressly objects to applying the customer's general terms and conditions with regard to the purchase of NXP Semiconductors products by customer.

No offer to sell or license — Nothing in this document may be interpreted or construed as an offer to sell products that is open for acceptance or the grant, conveyance or implication of any license under any copyrights, patents or other industrial or intellectual property rights.

All information provided in this document is subject to legal disclaimers.

© NXP Semiconductors N.V. 2014. All rights reserved.

Export control — This document as well as the item(s) described herein may be subject to export control regulations. Export might require a prior authorization from competent authorities.

Non-automotive qualified products — Unless this data sheet expressly states that this specific NXP Semiconductors product is automotive qualified, the product is not suitable for automotive use. It is neither qualified nor tested in accordance with automotive testing or application requirements. NXP Semiconductors accepts no liability for inclusion and/or use of non-automotive qualified products in automotive equipment or applications.

In the event that customer uses the product for design-in and use in automotive applications to automotive specifications and standards, customer (a) shall use the product without NXP Semiconductors' warranty of the product for such automotive applications, use and specifications, and (b) whenever customer uses the product for automotive applications beyond NXP Semiconductors' specifications such use shall be solely at customer's own risk, and (c) customer fully indemnifies NXP Semiconductors for any liability, damages or failed product claims resulting from customer design and use of the product for automotive applications beyond NXP Semiconductors' standard warranty and NXP Semiconductors' product specifications.

Translations — A non-English (translated) version of a document is for reference only. The English version shall prevail in case of any discrepancy between the translated and English versions.

19.4 Trademarks

Notice: All referenced brands, product names, service names and trademarks are the property of their respective owners.

20. Contact information

For more information, please visit: **http://www.nxp.com**

For sales office addresses, please send an email to: **salesaddresses@nxp.com**

All information provided in this document is subject to legal disclaimers.

© NXP Semiconductors N.V. 2014. All rights reserved.

21. Contents

1	**General description**	**1**
2	**Features and benefits**	**1**
3	**Applications**	**1**
4	**Ordering information**	**2**
4.1	Ordering options	2
5	**Block diagram**	**2**
6	**Pinning information**	**3**
6.1	Pinning	3
6.2	Pin description	3
7	**Functional description**	**4**
8	**Application design-in information**	**7**
9	**Limiting values**	**8**
10	**Static characteristics**	**8**
11	**Dynamic characteristics**	**8**
12	**Performance curves**	**9**
13	**Test information**	**10**
14	**Package outline**	**11**
15	**Soldering of SMD packages**	**12**
15.1	Introduction to soldering	12
15.2	Wave and reflow soldering	12
15.3	Wave soldering	12
15.4	Reflow soldering	13
16	**Soldering: PCB footprints**	**14**
17	**Abbreviations**	**15**
18	**Revision history**	**16**
19	**Legal information**	**17**
19.1	Data sheet status	17
19.2	Definitions	17
19.3	Disclaimers	17
19.4	Trademarks	18
20	**Contact information**	**18**
21	**Contents**	**19**

Please be aware that important notices concerning this document and the product(s) described herein, have been included in section 'Legal information'.

© NXP Semiconductors N.V. 2014. **All rights reserved.**

For more information, please visit: http://www.nxp.com
For sales office addresses, please send an email to: salesaddresses@nxp.com

Date of release: 4 June 2014
Document identifier: SA612A