P.O. Box 630 100 Douglas Ave. Yankton, SD 57078 USA
Phone: 800-762-8800 or 605-665-9321 Fax: 605-665-1709
Website: www.mtronpti.com

Specification for a Diplexer Cavity Filter Assembly
MtronPTI P/N SA0065

I. General & Electrical Requirements:

1. Channel 1 Filter
   - Passband: 1350MHz to 1375MHz
   - Insertion Loss (IL, within the passband):
     - @ 25˚C: < 1.5dB (< 1.0dB target)
     - Over OTR: < 1.75dB
   - Passband Ripple: ≤ 0.4dB
   - Passband Return Loss: 15dB minimum
2. Channel 2 Filter
   - Passband: 1492MHz to 1517MHz
   - Insertion Loss (IL, within the passband):
     - @ 25˚C: < 1.5dB (< 1.0dB target)
     - Over OTR: < 1.75dB
   - Passband Ripple: ≤ 0.4dB
   - Passband Return Loss: 15dB minimum
3. Common
   - Isolation Between the Bands: 75dB minimum
   - Power Handling: > 3-watts average, 10-watts peak
   - Z_{IN}/Z_{OUT} (all ports): 50Ω nominal

II. Environmental & Physical Requirements:

1. Environmental
   - Temperature
     - Operating (OTR): -10°C to +70°C
     - Storage (STR): -40°C to +85°C
2. Package:
   - Size: 5.000” (L) x 3.000” (W) x 0.750” (H), excluding connectors
   - Connectors: SMA-Female

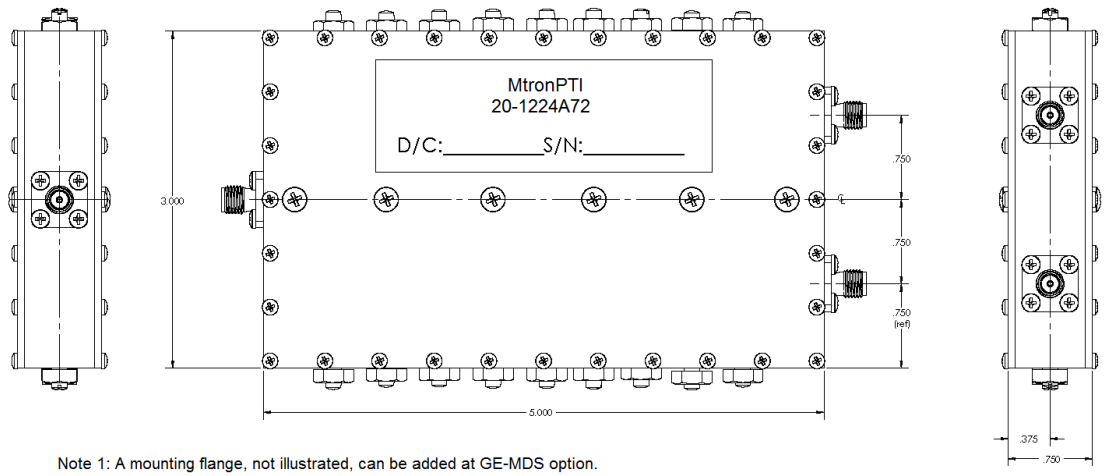

Note 1: A mounting flange, not illustrated, can be added at GE-MDS option.

Note 2: Tolerances, unless other wise noted
.xx = ±0.1
.xxx = ±0.005

The information contained herein is proprietary to MtronPTI and is submitted in confidence.
This information may not be copied or divulged without the express written permission of MtronPTI

P.O. Box 630 100 Douglas Ave. Yankton, SD 57078 USA
Phone: 800-762-8800 or 605-665-9321 Fax: 605-665-1709
Website: www.mtronpti.com

Specification for a Diplexer Cavity Filter Assembly
MtronPTI P/N SA0065

IV. Design Simulation Plots:

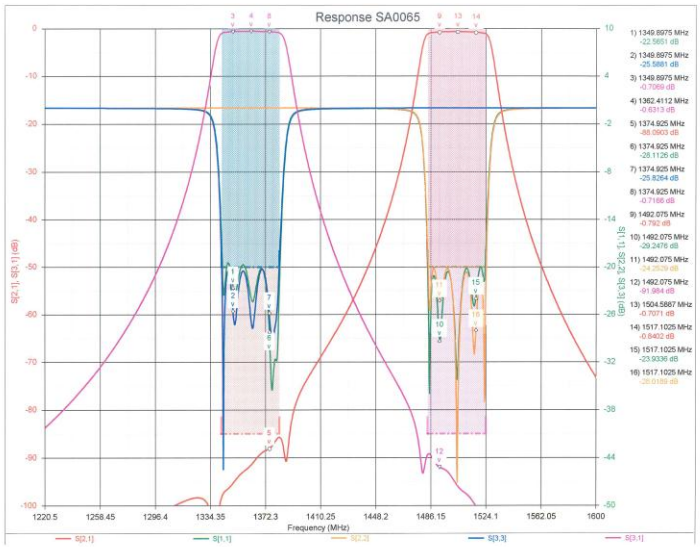

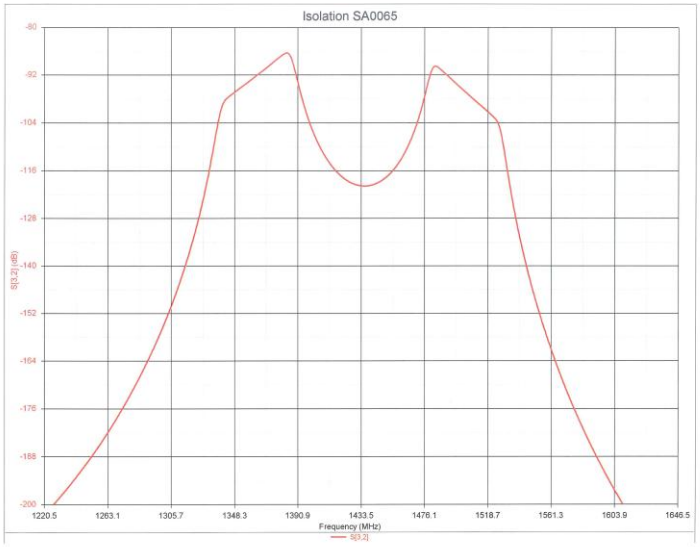

V. Data Sheet Revision Table:

Date	Rev.	Author	Details of Revision
10/12/11	1	BRM	Added Customer P/N for cross reference.
09/29/11	0	BRM	Original release.

The information contained herein is proprietary to MtronPTI and is submitted in confidence.
This information may not be copied or divulged without the express written permission of MtronPTI