Quad 8-Bit Nonvolatile DACPOT™ Electronic Potentiometer With a Mute Control Input

FEATURES

- **Four 8-Bit DACS**
  - **— Differential Non-linearity - ±0.5LSB max**
  - **— Integral Non-Linearity Error - ±1LSB max**
- **Each DAC has Independent Reference Inputs**
  - **— Output Buffer Amplifiers Swing Rail-to-Rail**
  - **— Ground to V_{DD} Reference Input Range**
- **Each DAC's Digital Inputs Maintained in EEPROM**
- **Power-On Reset Reloads Registers with Nonvolatile Data**
- **Simple Serial Interface for Reading and Writing DAC values, SPI™ and QSPI™ compatible.**
- **Fully operational from 2.7V to 5.5V**
- **Low Power, 4mW max at +5V**

OVERVIEW

The S9418 DACPOT™ is a serial input, voltage output, quad 8-bit digital to analog converter. The S9418 operates from a single +2.7V to +5.5V supply. Internal precision buffers swing rail-to-rail and the reference input range includes both ground and the positive supply.

The S9418 integrates four 8-bit DACs and their associated circuits which include; an enhanced unity gain operational amplifier output, an 8-bit data latch, an 8-bit nonvolatile register and an industry standard serial interface for reading and writing data to the DACs' data latches and registers. The DACs are independently programmable and each has its own electrically isolated Vreference inputs.

FUNCTIONAL BLOCK DIAGRAM

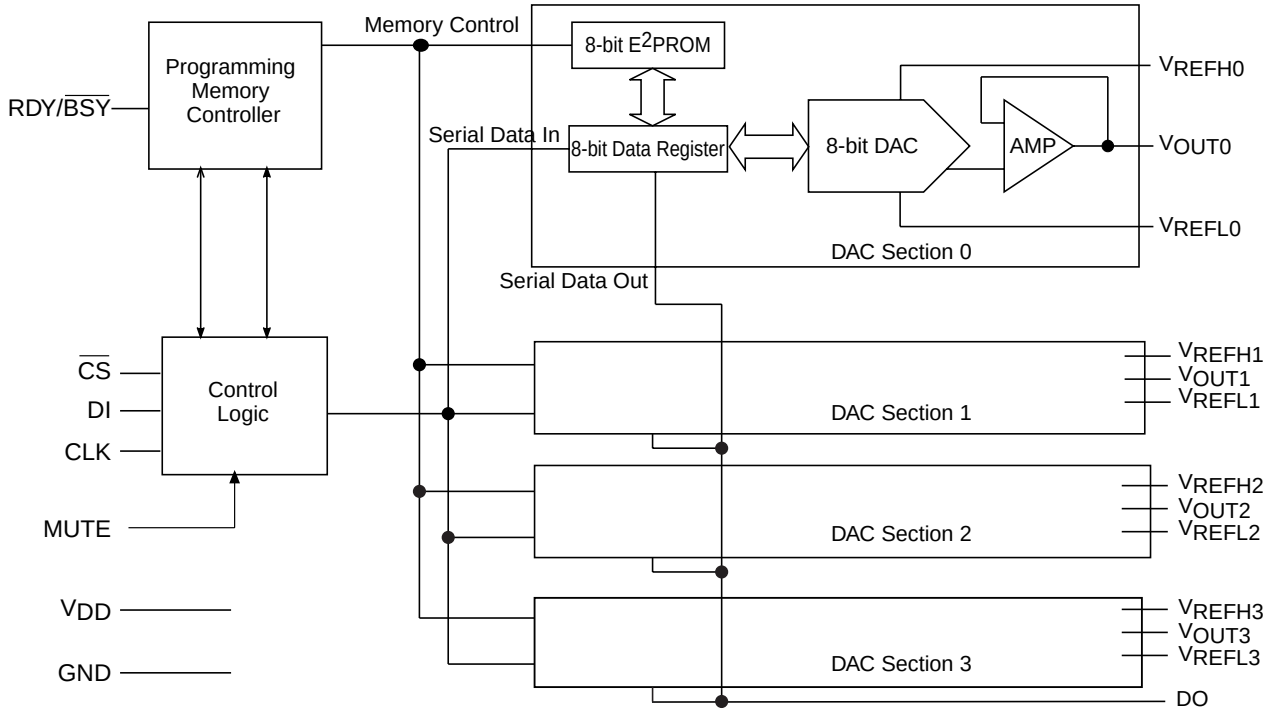

2023 ILL2 1.2

© SUMMIT MICROELECTRONICS, Inc. 1999

PINOUT and SIGNAL DEFINITION

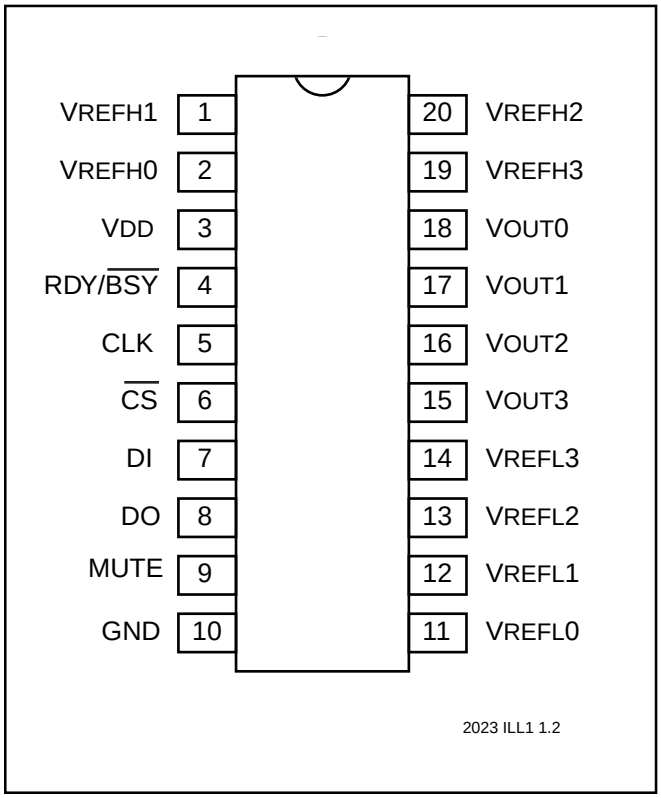

Pin	Name	Function
1, 2 20, 19	V_{REFH}	Vreference High: $V_{REFH} \leq V_{DD} > V_{REFL}$
3	V_{DD}	Power Supply Voltage
4	RDY/$\overline{BSY}$	Ready/Busy: open drain output indicating status of nonvolatile write operations
5	CLK	Clock Input Pin: used for serial data communication
6	$\overline{CS}$	Chip Select: When high deselects the device and places it in a low power mode
7	DI	Data Input: serial data input pin
8	DO	Data Output: serial data output pin
9	MUTE	When active forces V_{OUT} to V_{REFL}
10	GND	Power Supply Ground
11, 12 13, 14	V_{REFL}	Vreference Low
15, 16 17, 18	V_{OUT}	DAC Output: buffered D to A converter output

The analog outputs of the S9418 can be programmed to any one of 256 individual voltage steps. Each step value is 1/256th of the voltage differential between VrefH and VrefL of the respective DAC. Once programmed these settings can be retained in nonvolatile memory during all power conditions and will be automatically recalled upon a power-up sequence. Each DAC can be independently read without affecting the output voltage during the read cycle. In addition each output can be adjusted an unlimited number of times without altering the value stored in the nonvolatile memory.

DEVICE OPERATION

Analog Section

The S9418 is an 8-bit, voltage output digital-to-analog converter (DAC). The DAC consists of a resistor network that converts 8-bit digital inputs into equivalent analog output voltages in proportion to the applied reference voltage.

Reference inputs

The voltage differential between the V_{REFL} and V_{REFH} inputs sets the full-scale output voltage for its respective DAC. V_{REFL} must be equal to or greater than ground (positive voltage). V_{REFH} must be greater (more positive) than V_{REFL} or equal to V_{DD}.

Output Buffer Amplifiers

The voltage outputs are from precision unity-gain followers that can slew up to 1V/µs. The outputs can swing from V_{REFL} to V_{REFH}. With a 0V to 5V output transition the amplifier outputs typically settle to 1LSB in 50µs.

DIGITAL INTERFACE

The S9418 employs a common 4-wire serial interface. It is comprised of a Clock (CLK), Chip Select ($\overline{CS}$) and Data In (DI) input and a Data Out (DO) output. Data is clocked into the device on the clock's rising edge and out of the device on the clock's falling edge. Data is shifted in and out MSB first. DO only becomes active after the device has been selected and after a valid read command and address has been received.

All data transfers are initiated after $\overline{CS}$ goes LOW and a logic '1' is clocked into the device. This first data transfer is the start bit and must precede all operations. Following the start bit are two command bits used to specify which of four commands to execute. The next two bits are the address bits used to select one of the four DACs. The action of the next eight clock cycles will be dependent upon the command issued.

S	C_H	C_L	A_H	A_L	
1	0	0	A	A	NV Enable - Data Don't Care
1	0	1	A	A	Write Command - Data In
1	1	0	A	A	Read - Data Out
1	1	1	A	A	Recall -Data Don't Care

2023 PGM T1 1.0

TABLE 1. COMMAND FORMAT

Internally there are four DACs and associated with each are two registers. There is one data register that is used by the DAC to hold the digital value it converts. There is also one nonvolatile register that holds the default value that can be recalled into the data register during power-up or by executing the Recall command.

READ

Read operations are initiated by taking $\overline{CS}$ LOW and clocking in a start bit followed by the read command and the address of the data register to be read. The next eight clocks will output on the DO pin the contents of the selected data register. This read will not affect the contents of the register or the output of the DAC. Refer to Figure 1 for an illustration of the sequence of bus conditions for a read operation.

WRITE

Write operations are initiated by taking $\overline{CS}$ LOW and clocking in a start bit followed by the write command and the address of the data register to be written. This action is followed by the host clocking eight bits of data into the register, MSB first. The output of the selected DAC will change as the last bit is clocked into the device. At this point the clock counter will reset the command register, requiring a full sequence to be initiated in order to write to the DAC again. ***NOTE:*** *This write operation does not affect the contents of the nonvolatile register. Therefore, the nonvolatile register can contain the power-on default settings (e.g. volume), and the write DAC command can be used to make situational adjustments.* Refer to Figure 2 for an illustration of the sequence of bus conditions for a write operation.

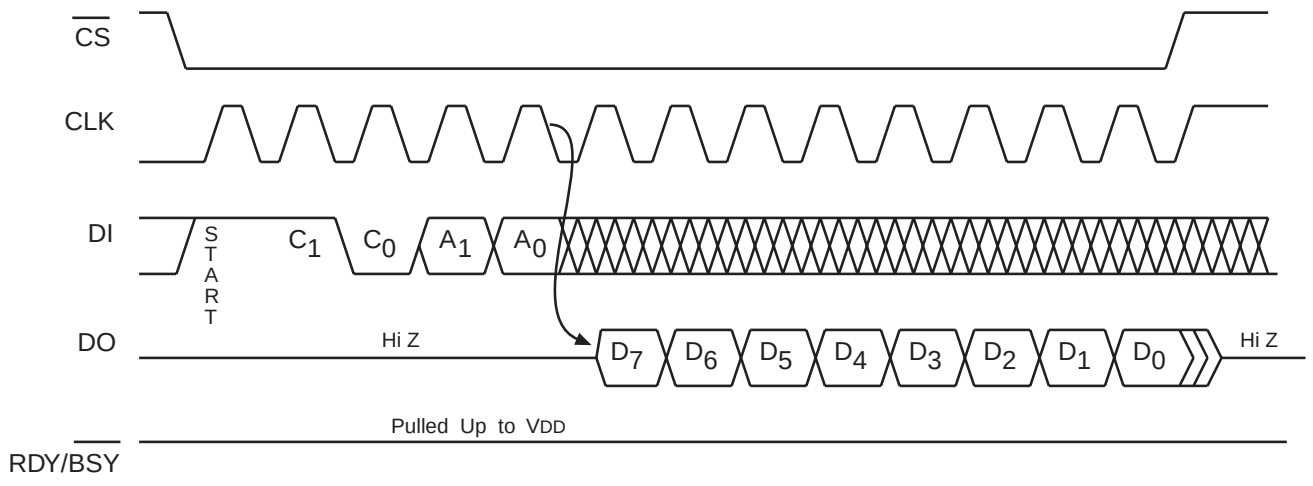

FIGURE 1. READ SEQUENCE

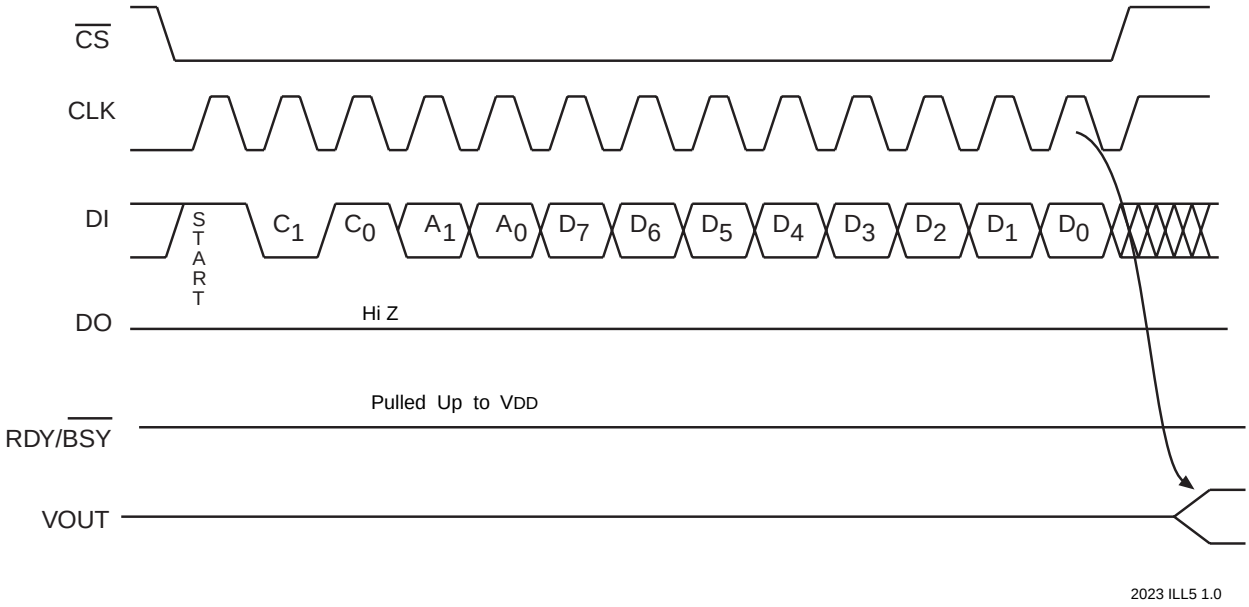

FIGURE 2. WRITE SEQUENCE

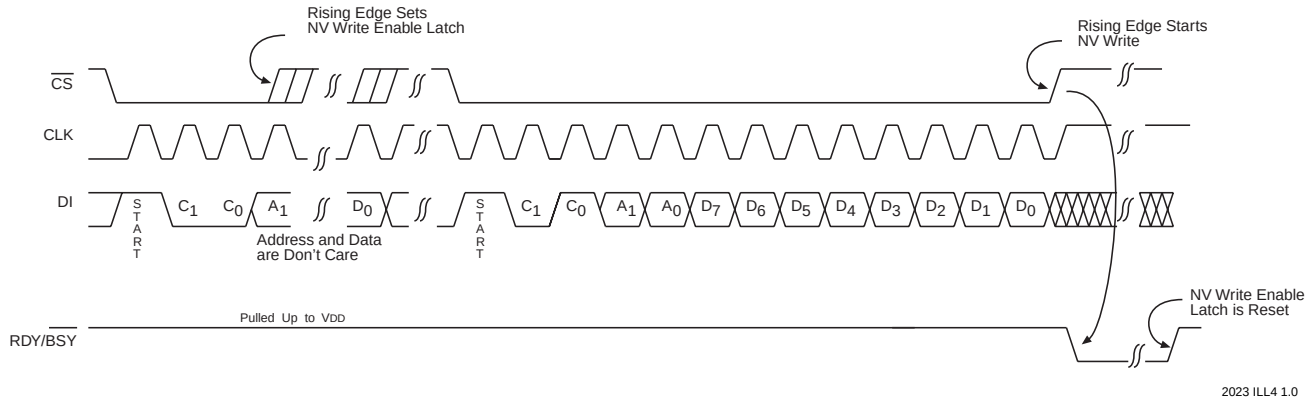

FIGURE 3. NONVOLATILE WRITE SEQUENCE

NONVOLATILE WRITE

A nonvolatile write is a two step operation: it is initiated by taking $\overline{CS}$ LOW and clocking in a start bit followed by the NV Write Enable command. At this point the host can take $\overline{CS}$ back high or continue clocking in data. This data is don't care and will be ignored by the S9418.

Next, the host takes $\overline{CS}$ LOW again and issues a write command and address and then clocks in the eight data bits to be programmed. The host will then bring $\overline{CS}$ HIGH and the data will be latched into the data register and a nonvolatile write operation will commence.

The status of the nonvolatile write can be monitored on the RDY/$\overline{BSY}$ pin. A logic low indicates the write is still in progress and the S9418 will not be accessible to the host; a logic high indicates the write has completed and the S9418 is ready for the next command. Refer to Figure 3 for an illustration of the sequence of bus conditions for a nonvolatile write operation.

RECALL COMMAND

The recall command will retrieve data from the selected nonvolatile register and write it into the data register of the associated DAC. This operation is initiated by taking $\overline{CS}$ LOW and clocking in a start bit followed by the recall command and the address of the nonvolatile register to be recalled. The eight bits of data are don't care, so $\overline{CS}$ can be taken high any time after the address bits are clocked in. Refer to Figure 4 for an illustration of the sequence of bus conditions for a Recall operation.

Power-On Recall

Whenever the S9418 is powered on, the V_{OUT} values will be returned to the analog equivalent of the data byte stored in the nonvolatile register.

MUTE Operation

The MUTE input is active high. Whenever the input is low, the V_{OUT} will reflect the value in the data register. If MUTE is driven high the V_{OUT} outputs will be switched to V_{REFL}. Releasing the MUTE input returns the V_{OUT} outputs to the analog equivalent of the data register contents.

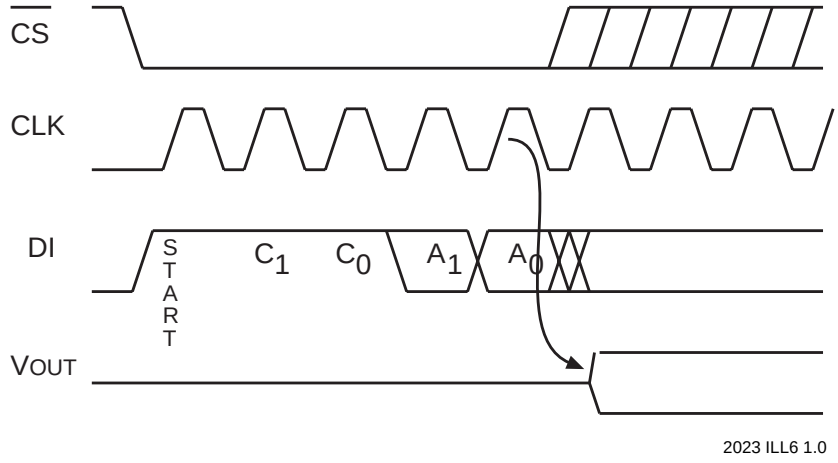

FIGURE 4. RECALL COMMAND SEQUENCE

ABSOLUTE MAXIMUM RATINGS

V_{DD} to GND ..... -0.5V to +7V
Digital Inputs to Gnd ..... -0.5V to V_{DD}+0.5V
Analog Inputs to ground ..... -0.5V to V_{DD}+0.5V
Digital Outputs to Gnd ..... -0.5V to V_{DD}+0.5V
Analog Outputs to Gnd ..... -0.5V to V_{DD}+0.5V
Temperature Under Bias ..... -55°C to +125°C
Storage Temperature ..... -65°C to +150°C
Lead Soldering (10 Sec Max) ..... 300°C

Stresses listed under Absolute Maximum Ratings may cause permanent damage to the device. These are stress ratings only, and functional operation of the device at these or any other conditions outside those listed in the operational sections of this specification is not implied. Exposure to any absolute maximum rating for extended periods may affect device performance and reliability.

RECOMMENDED OPERATING CONDITIONS

Condition	Min	Max
Temperature	-40°C	+85°C
V_{DD}	+2.7V	+5.5V

2023 PGM T2 1.1

RELIABILITY CHARACTERISTICS (over recommended operating conditions unless otherwise specified)

Symbol	Parameter	Min	Max	Unit	Test Method
V_{ZAP}	ESD Susceptibility	2000		V	MS-883, TM 3015
I_{LTH}	Latch-Up	100		mA	JEDEC Standard 17
T_{DR}	Data Retention	100		Years	MS-883, TM 1008
N_{END}	Endurance	1,000,000		Stores	MS-883, TM 1033

2023 PGM T3 1.1

DC ELECTRICAL CHARACTERISTICS (over recommended operating conditions unless otherwise specified)

Symbol	Parameter	Conditions	Min	Max	Units
I_{DD}	Supply Current during store, note 1	CS = V_{IL}		1.8	mA
I_{SB}	Standby Supply Current	CS = V_{IH}		800	µA
I_{IH}	Input Leakage Current	V_{IN} = V_{DD}		10	µA
I_{IL}	Input Leakage Current	V_{IN} =0V		-10	µA
V_{IH}	High Level Input Voltage		2	V_{DD}	V
V_{IL}	Low Level Input Voltage		0	0.8	V
V_{OH}	High Level Output Voltage	I_{OH} = -400µA	V_{DD}-0.3		V
V_{OL}	Low Level Output Voltage	I_{OL}=1mA, V_{DD} = +5V I_{OL}= 0.4mA, V_{DD} = +2.7V	 0.4	0.4 V	V

Note 1: I_{DD} is the supply current drawn while the EEPROM is being updated

2023 PGM T4 1.2

AC ELECTRICAL CHARACTERISTICS

V_{DD} = +4.5V to +5.5V, V_{REFH} = V_{DD}, V_{REFL} = 0V, T_A = -40°C to +85°C, unless otherwise specified

Symbol	Parameter	Conditions	Min.	Typ.	Max.	Units
f_C	Clock Frequency		DC		1	MHz
t_{WH}	Minimum CLK High Time		500			ns
t_{WL}	Minimum CLK Low Time		300			ns
t_{CS}	Minimum CS High Time		150			ns
t_{CSS}	CS Setup Time		100			ns
t_{CSH}	CS Hold Time	C_L = 100pF See Note 1	0			ns
t_{SU}	Data In Setup Time		50			ns
t_H	Data In Hold Time		50			ns
t_V	Output Valid Time				150	ns
t_{HO}	Data Out Hold Time		0			ns
t_{DIS}	Output Disable Time			400		ns
t_{BUSY}	Write Cycle Time			3.3	5	ms

Notes: 1. All timing measurements are defined at the point of signal crossing $V_{DD}/2$.

2023 PGM T5 1.1

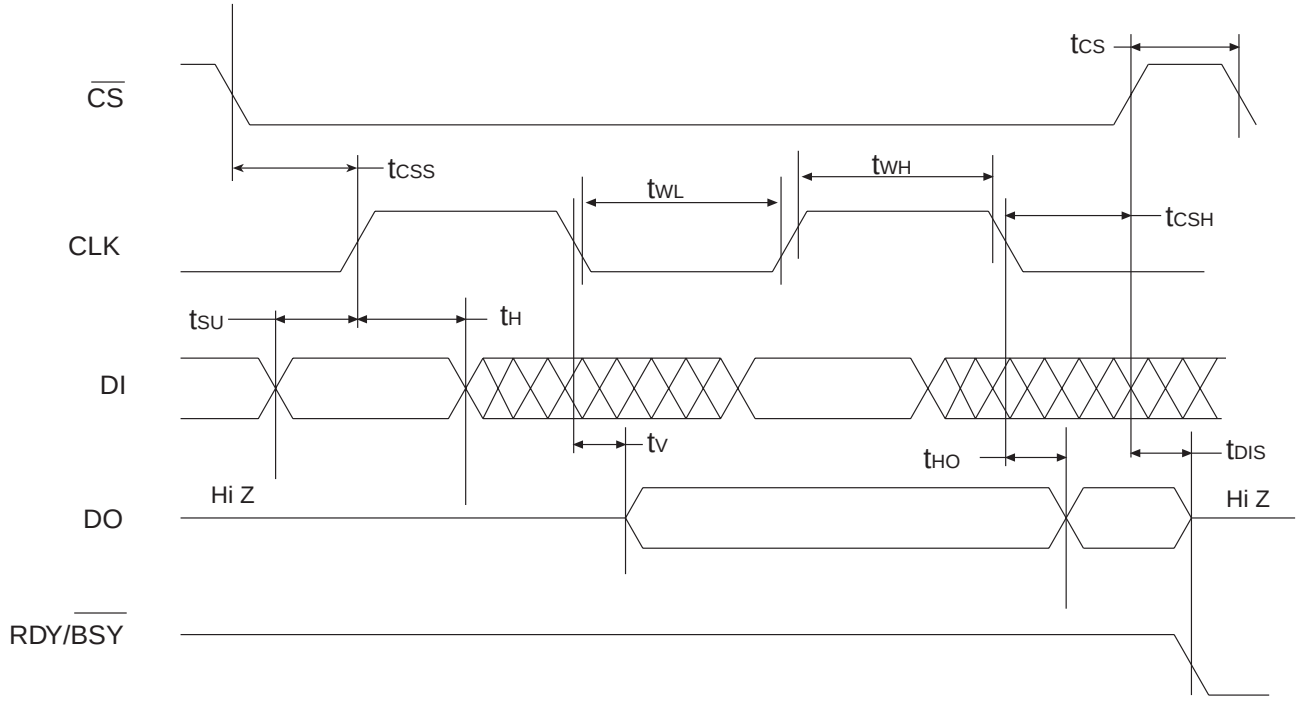

FIGURE 5. AC TIMING DIAGRAM

2023 ILL7 1.0

DAC ELECTRICAL CHARACTERISTICS

V_{DD} = +2.7V to +5.5V, V_{refH} = V_{DD}, V_{refL} = 0V, T_A = -40°C to +85°C, unless specified otherwise

	Symbol	Parameter	Conditions	Min.	Typ.	Max.	Units
Accuracy	INL	Integral Non-Linearity	I_{LOAD} = 100µA,	-	0.5	±1	LSB
	DNL	Differential Non-Linearity	I_{LOAD} = 100µA, Guaranteed but not tested	-	0.1	±0.5	LSB
References	V_{refH}	V_{refH} Input Voltage		V_{refL}	-	V_{DD}	V
	V_{refL}	V_{refL} Input Voltage		Gnd	-	V_{refH}	V
	R_{IN}	V_{refH} to V_{refL} Resistance		-	38K	-	Ω
	TCR_{IN}	Temperature Coefficient of R_{IN}		-	600	-	ppm/°C
	ΔR_{IN}	Input Resistance Match		-	±0.5	±1	%
Analog	G_{EFS}	Full-Scale Gain Error	D = FF			±1	LSB
Output	$V_{OUT}ZS$	Output Offset Voltage	D = 00	0		20	mV
	TCV_{OUT}	V_{OUT} Temperature Coefficient	V_{DD} = +5V, I_{LOAD} = 50µA, Guaranteed but not tested	-	-	50	µV/°C
	I_L	Amplifier Output Load Current		-200		+1000	µA
	R_{OUT}	Amplifier Output Resistance	V_{DD} = V_{refH} +5V +3V	- -	10 20		Ω Ω
	PSRR	Power Supply Rejection	I_{LOAD} = 10µA	-	-	1	LSB/V
	t_s	DAC Setting Time to 1LSB	10pf +5V 10pf +3V		20 20		µs µs
	e_N	Amplifier Output Noise	f = 1kHz, V_{DD} = +5V	-	90	-	nV/$\sqrt{Hz}$
	THD	Total Harmonic Distortion	V_{REFH} = 2.5V V_{DD} = +5V V_{IN} = 1V rms, f = 1kHz	-	0.08	-	%
	BW	Bandwidth - 3dB	V_{DD} = +5V V_{REFH} = +2.5V V_{IN} = 100mV rms	-	300	-	kHz

2023 PGM T6 1.5

20 Pin SOIC (.300) Package

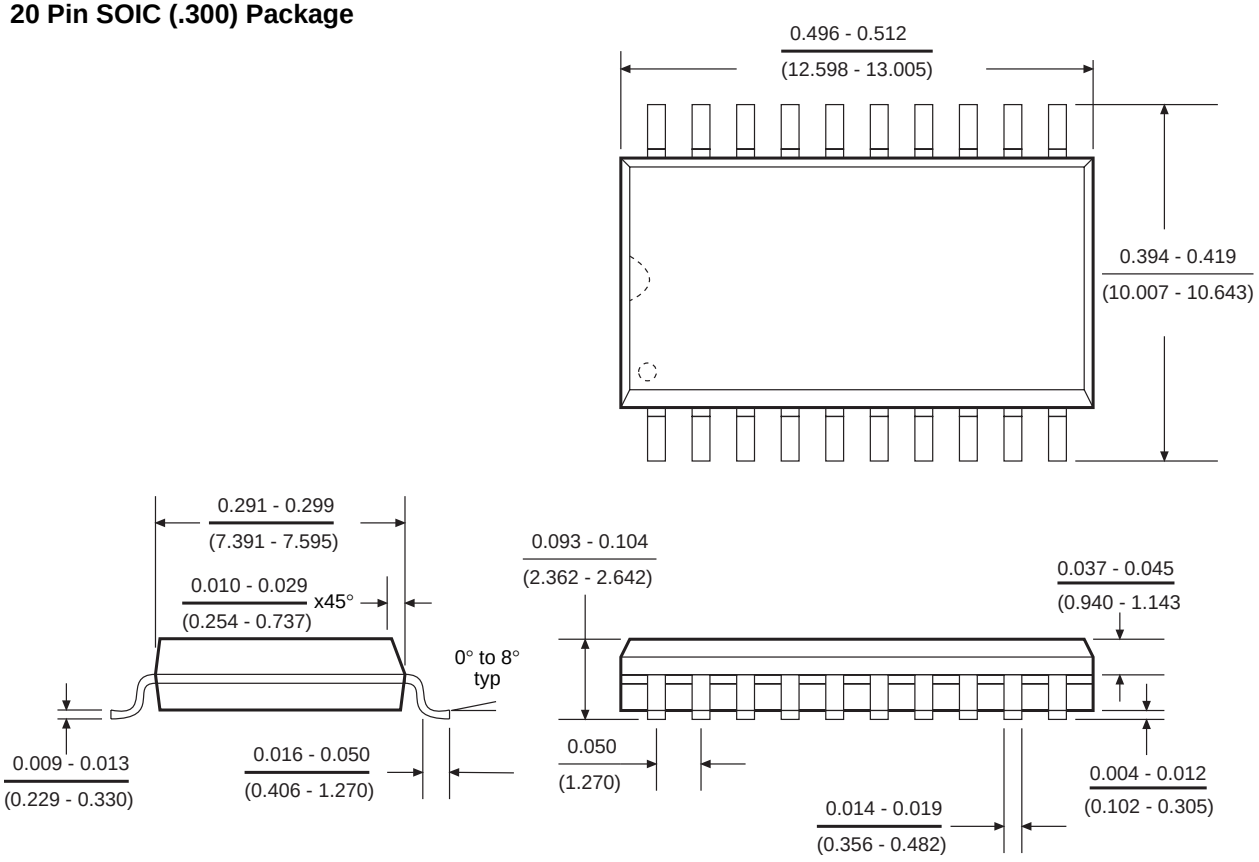

20pn SOIC ILL.1

ORDERING INFORMATION

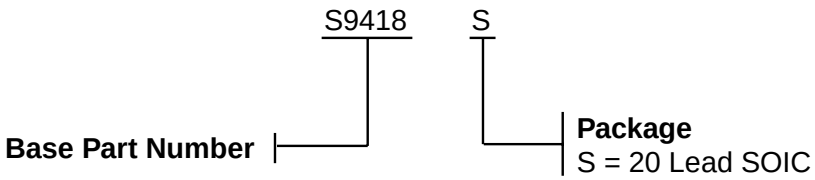

2023 ILL8 1.1

NOTICE

SUMMIT Microelectronics, Inc. reserves the right to make changes to the products contained in this publication in order to improve design, performance or reliability. SUMMIT Microelectronics, Inc. assumes no responsibility for the use of any circuits described herein, conveys no license under any patent or other right, and makes no representation that the circuits are free of patent infringement. Charts and schedules contained herein reflect representative operating parameters, and may vary depending upon a user's specific application. While the information in this publication has been carefully checked, SUMMIT Microelectronics, Inc. shall not be liable for any damages arising as a result of any error or omission.

SUMMIT Microelectronics, Inc. does not recommend the use of any of its products in life support applications where the failure or malfunction of the product can reasonably be expected to cause failure of the life support system or to significantly affect its safety or effectiveness. Products are not authorized for use in such applications unless SUMMIT Microelectronics, Inc. receives written assurances, to its satisfaction, that: (a) the risk of injury or damage has been minimized; (b) the user assumes all such risks; and (c) potential liability of SUMMIT Microelectronics, Inc. is adequately protected under the circumstances.

© Copyright 1999 SUMMIT Microelectronics, Inc.