Customer Information Sheet

DRAWING No.: S9131-45R	SHEET 2 OF 2	IF IN DOUBT - ASK	©	NOT TO SCALE	THIRD ANGLE PROJECTION	ALL DIMENSIONS IN mm

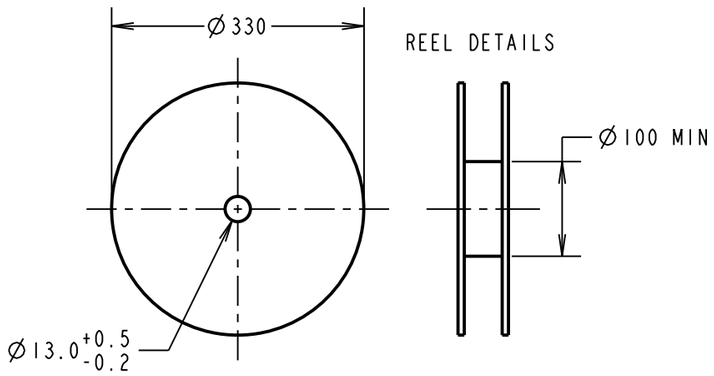

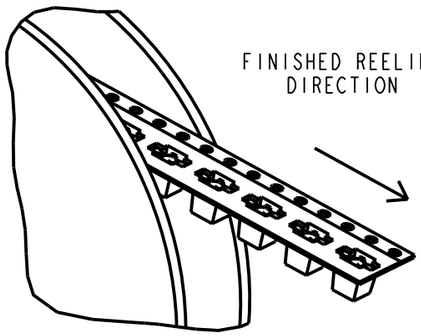



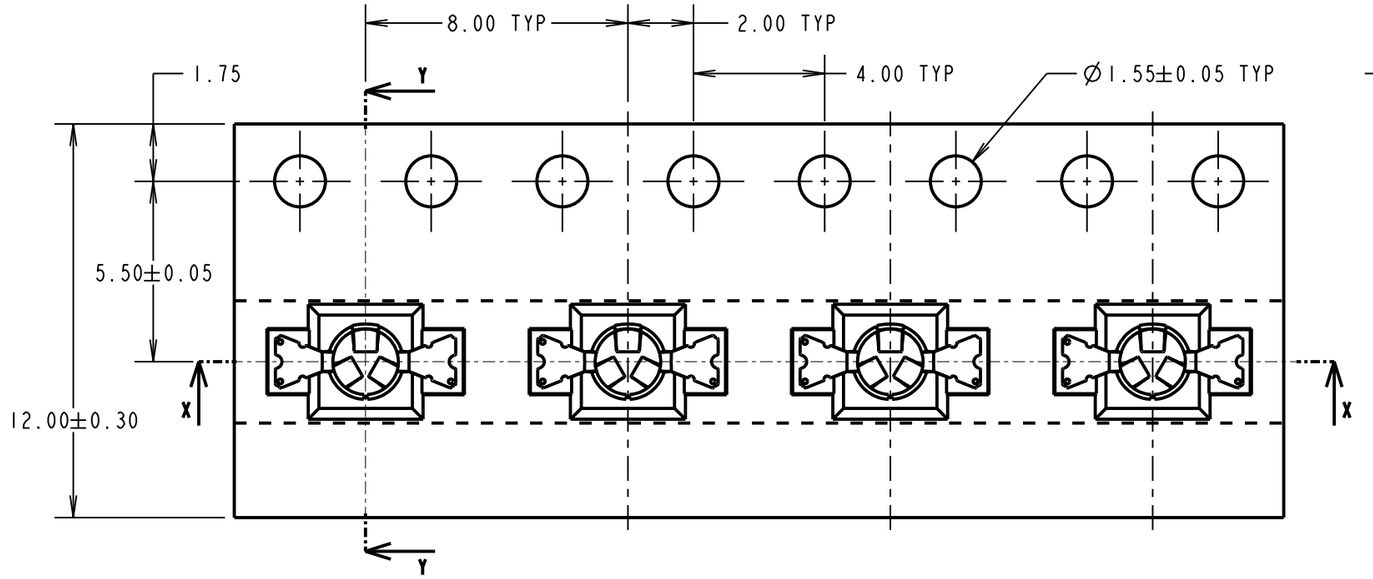

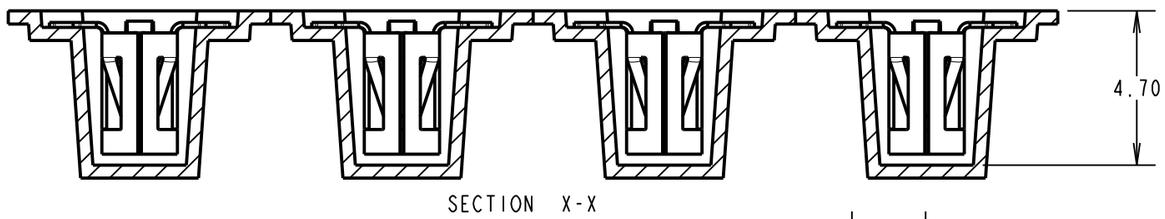

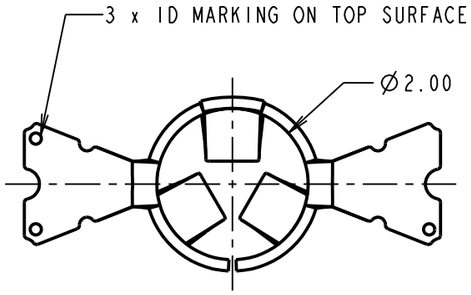

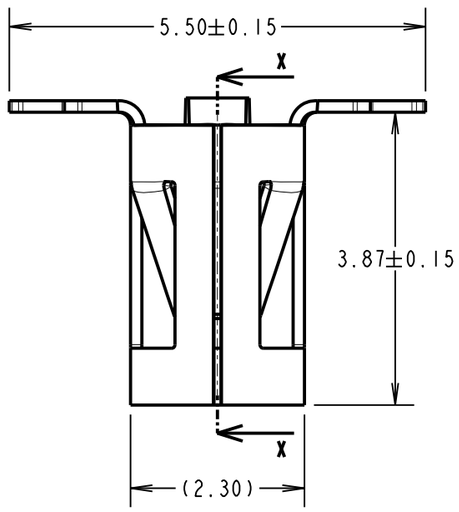

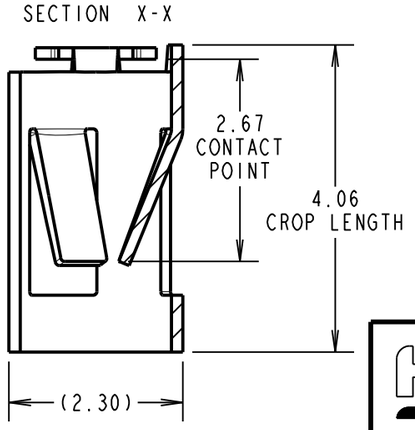

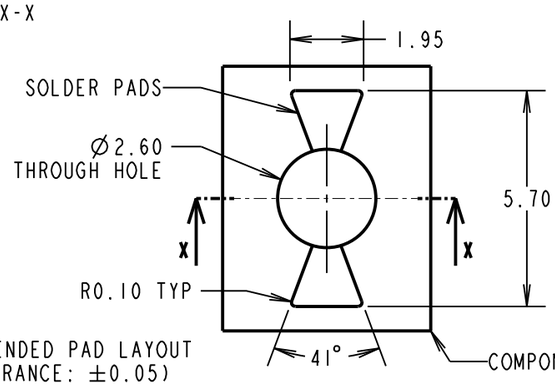

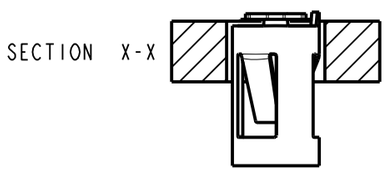

COMPONENT SPECIFICATION
- MATERIAL = BERYLLIUM COPPER
- FINISH = 0.10µm - 0.17µm GOLD OVER 1.0µm MIN NICKEL
- ELECTRICAL:
  - CURRENT RATING = 6A
  - CONTACT RESISTANCE = 15mΩ MAX
- MECHANICAL:
  - MAX INSERTION FORCE:
    - Ø0.80mm PIN = 3.0N
    - Ø1.00mm PIN = 4.5N
    - Ø1.30mm PIN = 6.0N
  - MIN WITHDRAWAL FORCE:
    - Ø0.80mm PIN = 1.0N
    - Ø1.00mm PIN = 1.0N
    - Ø1.30mm PIN = 2.0N
  - DURABILITY = 500 CYCLES
- ENVIRONMENTAL:
  - OPERATING TEMPERATURE = -50°C TO +125°C

NOTES:
1. QUANTITY OF COMPONENTS PER REEL = 1400.
2. THIS PRODUCT IS TAPED AND REELED IN GENERAL ACCORDANCE WITH EIA-481-2 (ELECTRONICS INDUSTRIES ASSOCIATION).

FM	2	09.04.18	21042
NAME	ISS.	DATE	C/NOTE
APPROVED:	F. MCGOWAN		
CHECKED:	S.BENNETT		
DRAWN:	S.BENNETT		
CUSTOMER REF.:			
ASSEMBLY DRG:			

HARWIN
www.harwin.com
technical@harwin.com

THIS DRAWING AND ANY INFORMATION OR DESCRIPTIVE MATTER SET OUT HEREON ARE CONFIDENTIAL AND COPYRIGHT PROPERTY OF THE HARWIN GROUP AND MUST NOT BE DISCLOSED, LOANED, COPIED OR USED FOR MANUFACTURING, TENDERING OR FOR ANY OTHER PURPOSE WITHOUT THEIR WRITTEN PERMISSION.

TOLERANCES
X. = ±1mm
X.X = ±0.50mm
X.XX = ±0.10mm
X.XXX = ±0.01mm
ANGLES = ±5°
UNLESS STATED

MATERIAL: SEE ABOVE

FINISH: SEE ABOVE

S/AREA: mm²

TITLE: SYCAMORE CONTACT Ø1.00mm TOP ENTRY SOCKET IN TAPE & REEL

DRAWING NUMBER: S9131-45R

SHT 2 OF 2