Switch Mode Power Supply
S8VM (15/30/50/100/150/300/600/1,500-W Models)

CSM_S8VM_DS_E_12_1

Power Supply Featuring OMRON's Unique, New Undervoltage Alarm Function with Compact Body Contributing to Machine Downsizing

- New undervoltage alarm function assists in determining causes of errors (S8VM-□□□24A□/P□ only).
- Power failure alarm function provides notification of output voltage errors (300-, 600-, and 1,500-W models only).
- Broad range of possibilities with 8 capacities and 29 models to choose from.
- RoHS-compliant
- New, attentive design prevents screws from falling out of terminal block (except for output terminals of 300-, 600-, and 1,500-W models).
- Finger protection prevents electric shock.
- DIN Rail mounting.
- Safety standards: UL508/60950-1/1604, CSA C22.2 No. 14/No. 60950-1/No. 213, EN50178, EN60950-1 (The 300-, 600-, and 1,500-W models will not conform to safety standards if the customer replaces the fan.)
- Conforms to SEMI F47-0200 (when 200-V input is used).
- Harmonic current emissions: Conforms to EN61000-3-2 (except for 15- and 30-W models).



⚠ Refer to *Safety Precautions for All Power Supplies* and *Safety Precautions* on page 32.

Model Number Structure

■ Model Number Legend

Note: Not all combinations are possible. Refer to *List of Models* in *Ordering Information* on page 2.

S8VM- □□□□□□
1 2 3 4

1. Power Ratings

015: 15 W
030: 30 W
050: 50 W
100: 100 W
150: 150 W
300: 300 W
600: 600 W
152: 1,500 W

2. Output Voltage

05: 5 V
12: 12 V
15: 15 V
24: 24 V

3. Configuration/Functions

None:	Open-frame type	Standard type
C:	Covered type	Standard type
A:	Covered type	Undervoltage alarm type (Sinking (emitter COM)) (See note 2.)
P:	Covered type	Undervoltage alarm type (Sourcing (collector COM)) (See note 2.)

4. Configuration

None: Bottom mounting type (See note 3.)
D: DIN Rail mounting bracket type

Note: 1. A forced-air cooling method with a fan is used with 300-, 600-, and 1,500-W models.
2. The housing and terminal of the connector for the undervoltage alarm output are provided with the S8VM-05024A□/P□, S8VM-10024A□/P□ and S8VM-15024A□/P□.
3. Bottom mounting models cannot be used for front mounting. For a front mounting configuration, use a DIN Rail Mounting Bracket model or Mounting Brackets (sold separately).

Ordering Information

■ List of Models

Note: For details on normal stock models, contact your nearest OMRON representative.

Configuration	Power ratings	Input voltage	Output voltage	Output current	Bottom mounting			DIN Rail mounting bracket		
					Standard model	Undervoltage alarm model		Standard model	Undervoltage alarm model	
						Sinking	Sourcing		Sinking	Sourcing
Open-frame type	15 W	100 to 240 VAC	5 V	3 A	S8VM-01505	---	---	S8VM-01505D	---	---
			12 V	1.3 A	S8VM-01512	---	---	S8VM-01512D	---	---
			15 V	1 A	S8VM-01515	---	---	S8VM-01515D	---	---
			24 V	0.65 A	S8VM-01524	---	---	S8VM-01524D	---	---
	30 W		5 V	6 A	S8VM-03005	---	---	S8VM-03005D	---	---
			12 V	2.5 A	S8VM-03012	---	---	S8VM-03012D	---	---
			15 V	2 A	S8VM-03015	---	---	S8VM-03015D	---	---
			24 V	1.3 A	S8VM-03024	---	---	S8VM-03024D	---	---
	50 W		5 V	10 A	S8VM-05005	---	---	S8VM-05005D	---	---
			12 V	4.3 A	S8VM-05012	---	---	S8VM-05012D	---	---
			15 V	3.5 A	S8VM-05015	---	---	S8VM-05015D	---	---
			24 V	2.2 A	S8VM-05024	---	---	S8VM-05024D	---	---
	100 W		5 V	20 A	S8VM-10005	---	---	S8VM-10005D	---	---
			12 V	8.5 A	S8VM-10012	---	---	S8VM-10012D	---	---
			15 V	7 A	S8VM-10015	---	---	S8VM-10015D	---	---
			24 V	4.5 A	S8VM-10024	---	---	S8VM-10024D	---	---
	150 W		5 V	27 A	S8VM-15005 (See note 2.)	---	---	S8VM-15005D (See note 2.)	---	---
			12 V	12.5 A	S8VM-15012	---	---	S8VM-15012D	---	---
			15 V	10 A	S8VM-15015	---	---	S8VM-15015D	---	---
			24 V	6.5 A (See note 6.)	S8VM-15024	---	---	S8VM-15024D	---	---
Covered type	15 W	100 to 240 VAC	5 V	3 A	S8VM-01505C	---	---	S8VM-01505CD	---	---
			12 V	1.3 A	S8VM-01512C	---	---	S8VM-01512CD	---	---
			15 V	1 A	S8VM-01515C	---	---	S8VM-01515CD	---	---
			24 V	0.65 A	S8VM-01524C	S8VM-01524A (See note 1.)		S8VM-01524CD	S8VM-01524AD (See note 1.)	
	30 W		5 V	6 A	S8VM-03005C	---	---	S8VM-03005CD	---	---
			12 V	2.5 A	S8VM-03012C	---	---	S8VM-03012CD	---	---
			15 V	2 A	S8VM-03015C	---	---	S8VM-03015CD	---	---
			24 V	1.3 A	S8VM-03024C	S8VM-03024A (See note 1.)		S8VM-03024CD	S8VM-03024AD (See note 1.)	
	50 W		5 V	10 A	S8VM-05005C	---	---	S8VM-05005CD	---	---
			12 V	4.3 A	S8VM-05012C	---	---	S8VM-05012CD	---	---
			15 V	3.5 A	S8VM-05015C	---	---	S8VM-05015CD	---	---
			24 V	2.2 A	S8VM-05024C	S8VM-05024A	S8VM-05024P	S8VM-05024CD	S8VM-05024AD	S8VM-05024PD
	100 W		5 V	20 A	S8VM-10005C	---	---	S8VM-10005CD	---	---
			12 V	8.5 A	S8VM-10012C	---	---	S8VM-10012CD	---	---
			15 V	7 A	S8VM-10015C	---	---	S8VM-10015CD	---	---
			24 V	4.5 A	S8VM-10024C	S8VM-10024A	S8VM-10024P	S8VM-10024CD	S8VM-10024AD	S8VM-10024PD
	150 W		5 V	27 A	S8VM-15005C (See note 2.)	---	---	S8VM-15005CD (See note 2.)	---	---
			12 V	12.5 A	S8VM-15012C	---	---	S8VM-15012CD	---	---
			15 V	10 A	S8VM-15015C	---	---	S8VM-15015CD	---	---
			24 V	6.5 A (See note 6.)	S8VM-15024C	S8VM-15024A	S8VM-15024P	S8VM-15024CD	S8VM-15024AD	S8VM-15024PD
	300 W (See note 4.)		5 V	60 A	S8VM-30005C	---	---	---	---	---
			12 V	27 A	S8VM-30012C	---	---	---	---	---
			15 V	22 A	S8VM-30015C	---	---	---	---	---
			24 V	14 A Peak current: 16.5 A (200 VAC)	S8VM-30024C	---	---	---	---	---
	600 W (See note 4.)		5 V	120 A	S8VM-60005C	---	---	---	---	---
			12 V	53 A	S8VM-60012C	---	---	---	---	---
			15 V	43 A	S8VM-60015C	---	---	---	---	---
			24 V	27 A Peak current: 31 A (200 VAC)	S8VM-60024C	---	---	---	---	---
	1,500 W (See note 4.)		24 V	65 A (100 VAC) 70 A (200 VAC) Peak current: 105 A (200 VAC)	S8VM-15224C (See note 3.)	---	---	---	---	---

Note: 1. No outputs are built into these models.

2. The output capacity of the S8VM-15005□□ is 135 W.

3. M8 bolts and nuts for the output terminals are not included with the S8VM-15224C.

4. The 300-, 600-, and 1,500-W models use a forced cooling method with built-in fans.

5. To perform front mounting using the bottom mounting models, use the Mounting Brackets (S82Y-VM□□F, sold separately).

6. The output current for UL1604 certification is 6.3 A.

Specifications

■ Ratings/Characteristics

Item		Power rating	15 W	30 W	50 W	100 W	150 W
Efficiency		5-V models	75% min.	75% min.	80% min.	81% min.	81% min.
		12-V models	78% min.	79% min.	79% min.	81% min.	81% min.
		15-V models	78% min.	79% min.	79% min.	81% min.	81% min.
		24-V models	80% min.	81% min.	80% min.	82% min.	83% min.
Input	Voltage (See note 1.)		100 to 240 VAC (85 to 264 VAC)				
	Frequency (See note 1.)		50/60 Hz (47 to 63 Hz)				
	Current	100-V input	0.5 A max.	0.9 A max.	0.8 A max.	1.4 A max.	2.0 A max.
		200-V input	0.25 A max.	0.45 A max.	0.4 A max.	0.7 A max.	1.0 A max.
	Power factor	100-V input	---		0.98 min.		
		200-V input	---		0.94 min.		
	Harmonic current emissions		---		Conforms to EN 61000-3-2		
	Leakage current	100-V input	0.4 mA max. (at rated output)				
		200-V input	0.75 mA max. (at rated output)				
	Inrush current (See note 2.)	100-V input	17.5 A max. (for cold start at 25°C)				
		200-V input	35 A max. (for cold start at 25°C)				
Output	Voltage adjustment range (See note 3.)		–20% to 20% (with V. ADJ) (S8VM-□□□24A□/P□: –10% to 20%)				
	Ripple		3.2% (p-p) max. (5 V), 1.5% (p-p) max. (12 V), 1.2% (p-p) max. (15 V), 1.0% (p-p) max. (24 V), (at rated input/output voltage)		3.2% (p-p) max. (5 V), 1.5% (p-p) max. (12 V), 1.2% (p-p) max. (15 V), 0.75% (p-p) max. (24 V), (at rated input/output voltage)		
	Input variation influence		0.4% max. (at 85 to 264 VAC input, 100%)				
	Load variation influence (rated input voltage)		0.8% max. (with rated input, 0 to 100% load)				
	Temperature variation influence		0.02%/°C max.				
	Startup time (See note 2.)		1,100 ms max. (at rated input/output voltage)		800 ms max. (at rated input/output voltage)		
	Hold time (See note 2.)		20 ms typ. (15 ms min.) (at rated input/output voltage)				
Additional functions	Overload protection (See note 2.)		105% to 160% of rated load current, voltage drop, intermittent, automatic reset		105% to 160% of rated load current, voltage drop (12 V, 15 V, and 24 V), voltage drop, intermittent (5 V), automatic reset		
	Overvoltage protection (See note 2.)		Yes (See note 4.)				
	Undervoltage alarm indication		Yes (color: Yellow (DC LOW1), red (DC LOW2)) (S8VM-□□□24A□/P□ only)				
	Undervoltage alarm output		No		Yes (S8VM-□□□24A□/P□ only) (Transistor output), 30 VDC max., 50 mA max. (See note 8.)		
	Series operation		Yes for up to 2 Power Supplies (with external diode)				
	Parallel operation		No				
	Remote sensing function		No			Yes	
Other	Ambient operating temperature		Refer to the derating curve in *Engineering Data (15-W, 30-W, 50-W, 100-W, 150-W Models)*. (with no icing or condensation) (See note 2.)				
	Storage temperature		–25 to 65°C				
	Ambient operating humidity		30% to 85% (Storage humidity: 25% to 90%)				
	Dielectric strength		3.0 kVAC for 1 min. (between all inputs and outputs; detection current: 20 mA) 2.0 kVAC for 1 min. (between all inputs and PE/FG terminals; detection current: 20 mA) 500 VAC for 1 min. (between all outputs and PE/FG terminals; detection current: 100 mA) 500 VAC for 1 min. (between all outputs (except the detection output terminals) and detection output terminals; detection current: 20 mA) (S8VM-□□□24A□/P□ only)				
	Insulation resistance		100 MΩ min. (between all outputs and all inputs, PE/FG terminals) at 500 VDC				
	Vibration resistance		10 to 55 Hz, 0.375-mm single amplitude for 2 hours each in X, Y, and Z directions				
	Shock resistance		150 m/s², 3 times each in ±X, ±Y, ±Z directions				
	Output indicator		Yes (color: Green)				
	EMI	Conducted Emission	Conforms to EN61204-3 EN55011 Class B and based on FCC Class B (See note 5.)				
		Radiated Emission	Conforms to EN61204-3 EN55011 Class B (See note 6.)				
	EMS		Conforms to EN61204-3 High severity levels				
	Approved standards	UL cUL cUR EN/TÜV	UL508 (Listing), UL60950-1, UL1604 (Listing; Class I/Division 2, Group A, B, C, D Hazardous Locations) (See note 9.) CSA C22.2 No.14, No. 213 (Class I/Division 2, Group A, B, D, D Hazardous Locations) CSA No. 60950-1 EN50178, EN60950-1 SELV (EN60950-1) According to VDE0160/P100				
		SEMI	SEMI F47-0200 (200 VAC input)				
	Weight (See note 7.)		180 g max.	220 g max.	290 g max.	460 g max.	530 g max.

Note: 1. Do not use an Inverter output for the Power Supply. Inverters with an output frequency of 50/60 Hz are available, but the rise in the internal temperature of the Power Supply may result in ignition or burning.
2. Refer to *Engineering Data (15-W, 30-W, 50-W, 100-W, 150-W Models)* on page 9 to 11 for details.
3. If the output voltage adjuster (V. ADJ) is turned, the voltage will increase by more than +20% of the voltage adjustment range. If the adjuster is turned too far, it may activate the overvoltage protection function and interrupt the output.
When adjusting the output voltage, confirm the actual output voltage from the Power Supply and be sure that the load is not damaged.
4. To reset the protection, turn OFF the input power for three minutes or longer and then turn it back ON.
5. Conducted emissions: The noise value is affected by factors such as the wiring method. The Power Supply conforms to Class B when the aluminum plate is laid under the Power Supply. For 15-W models, insert a clamp filter (ZCAT2436-1330 by TDK: 50 Ω min. [50 to 500 MHz], or the equivalent) in the output wire to reduce noise.
6. Radiated emissions: The noise value is affected by factors such as the wiring method. The Power Supply conforms to Class B when the aluminum plate is laid under the Power Supply. For 150-W models, insert a clamp filter (ZCAT2017-0930 by TDK: 35 Ω min. [50 to 500 MHz], or the equivalent) in the input wire to reduce noise.
7. The weight indicated is for bottom mounting, open-frame models.
8. A□: Sinking type (NPN)
P□: Sourcing type (PNP)
9. With the S8VM-15024□□, the output current for UL1604 certification is 6.3 A.

Item		Power rating	300 W	600 W	1,500 W
Efficiency		5-V models	77% min.	77% min.	---
		12-V models	78% min.	79% min.	---
		15-V models	79% min.	80% min.	---
		24-V models	81% min.	81% min.	82% min.
Input	Voltage (See note 1.)		100 to 240 VAC (85 to 264 VAC)		100 to 240 VAC (85 to 265 VAC)
	Frequency (See note 1.)		50/60 Hz (47 to 63 Hz)		
	Current	100-V input	4.0 A max. (5 V) 4.3 A max. (12 V, 15 V, and 24 V)	8.0 A max. (5 V) 8.3 A max. (12 V, 15 V, and 24 V)	20.0 A max.
		200-V input	2.0 A max. (5 V) 2.2 A max. (12 V, 15 V, and 24 V)	4.0 A max. (5 V) 4.2 A max. (12 V, 15 V, and 24 V)	11.0 A max.
	Power factor	100-V input	0.98 min.		0.97 min.
		200-V input	0.94 min.		0.93 min.
	Harmonic current emissions		Conforms to EN61000-3-2		
	Leakage current	100-V input	0.4 mA max.		1.5 mA max.
		200-V input	0.75 mA max.		1.5 mA max.
	Inrush current (See note 2.)	100-V input	20 A max. (for cold start at 25°C)		
		200-V input	40 A max. (for cold start at 25°C)		
Output	Voltage adjustment range (See note 3.)		–20% to 20% (with V. ADJ)		
	Ripple		3.8% (p-p) max. (5 V), 2.0% (p-p) max. (12 V), 2.0% (p-p) max. (15 V), 1.25% (p-p) max. (24 V), (at rated input/output voltage)		1.25% (p-p) max. (See note 7.), (at rated input/output voltage)
	Input variation influence		0.4% max. (at 85 to 264 VAC input, 100%)		
	Load variation influence (rated input voltage)		0.6% max. (with rated input, 0 to 100% load)		
	Temperature variation influence		0.02%/°C max.		
	Startup time (See note 2.)		1,000 ms max. (at rated input/output voltage)		
	Hold time (See note 2.)		20 ms typ. (15 ms min.) (at rated input/output voltage)		
Additional functions	Overload protection (See note 2.)		105% to 160% of rated load current (5 V, 12 V, and 15 V), 120% to 160% of rated load current (S8VM-30024C), 115% to 160% of rated load current (S8VM-60024C), voltage drop (12 V, 15 V, and 24 V), voltage drop, intermittent (5 V), automatic reset		105% to 160% of rated load current (100 VAC), 155% to 200% of rated load current (200 VAC), voltage drop, automatic reset (Turns OFF when continuous for 5 s min.) (See note 4.)
	Overvoltage protection (See note 2.)		Yes (See note 4.)		
	Overheat protection (See note 2.)		Yes (See note 4.)		
	Undervoltage alarm indication		No		
	Undervoltage alarm output		No		
	Power failure alarm indication		Yes (color: Red)		
	Power failure alarm output		Yes (Transistor output), 30 VDC max., 50 mA max.		
	Series operation		Yes for up to 2 Power Supplies (with external diode)		
	Parallel operation		Yes (Up to 2 units)		
	Remote sensing function		Yes		
	Remote control function		Yes		
Other	Ambient operating temperature		Refer to the derating curve in *Engineering Data (300-W, 600-W, 1,500-W Models).* (with no icing or condensation) (See note 2.)		
	Storage temperature		–25 to 65°C		
	Ambient operating humidity		30% to 85% (Storage humidity: 25% to 90%)		
	Dielectric strength		3.0 kVAC for 1 min. (between all inputs and outputs; detection current: 20 mA) 2.0 kVAC for 1 min. (between all inputs and PE terminals; detection current: 20 mA) 500 VAC for 1 min. (between all outputs and PE terminals; detection current: 100 mA) 100 VAC for 1 min. (between all outputs and RC terminals; detection current: 100 mA) 500 VAC for 1 min. (between all outputs and PF terminals; detection current: 20 mA)		3.0 kVAC for 1 min. (between all inputs and outputs; detection current: 20 mA) 2.0 kVAC for 1 min. (between all inputs and FG terminals; detection current: 20 mA) 500 VAC for 1 min. (between all outputs and FG terminals; detection current: 300 mA) 100 VAC for 1 min. (between all outputs and RC terminals; detection current: 100 mA) 500 VAC for 1 min. (between all outputs and PF terminals; detection current: 20 mA)
	Insulation resistance		100 MΩ min. (between all outputs and all inputs, PE terminals) at 500 VDC		100 MΩ min. (between all outputs and all inputs, FG terminals) at 500 VDC
	Vibration resistance		10 to 55 Hz, 0.375-mm single amplitude for 2 hours each in X, Y, and Z directions		10 to 55 Hz, 0.15-mm single amplitude for 2 hours each in X, Y, and Z directions
	Shock resistance		150 m/s², 3 times each in ±X, ±Y, ±Z directions		
	Output indicator		Yes (color: Green)		
	EMI	Conducted Emission	Conforms to EN61204-3 EN55011 Class B and based on FCC Class B (See note 5.)		Conforms to EN61204-3 EN55011 Class A and based on FCC Class A (See note 6.)
		Radiated Emission	Conforms to EN61204-3 EN55011 Class B (See note 5.)		Conforms to EN61204-3 EN55011 Class A (See note 6.)
	EMS		Conforms to EN61204-3 High severity levels		
	Approved standards (See note 8.)	UL cUR cUR EN/TÜV	UL508 (Recognition) (5 V, 12 V, and 15 V) UL508 (Listing) (24 V), UL60950-1 UL1604 (Listing; Class I/Division 2, Group A, B, C, D Hazardous Locations) (24 V) CSA C22.2 No.14, No. 213 (Class I/Division 2, Group A, B C, D Hazardous Locations) (24 V) CSA No. 60950-1 EN50178, EN60950-1 SELVE (EN60950-1)		UL508, UL60950-1 CSA C22.2 No.14, CSA No. 60950-1 EN50178, EN60950-1 SELVE (EN60950-1)
		SEMI	SEMI F47-0200 (200-VAC input)		
	Weight		1,100 g max.	1,700 g max.	3,800 g max.

Note: **1.** Do not use an Inverter output for the Power Supply. Inverters with an output frequency of 50/60 Hz are available, but the rise in the internal temperature of the Power Supply may result in ignition or burning.

2. Refer to *Engineering Data (300-W, 600-W, 1,500-W Models)* on page 15 to 17 for details.

3. If the output voltage adjuster (V. ADJ) is turned, the voltage will increase by more than +20% of the voltage adjustment range. If the adjuster is turned too far, it may activate the overvoltage protection function and interrupt the output. When adjusting the output voltage, confirm the actual output voltage from the Power Supply and be sure that the load is not damaged.

4. To reset the protection, turn OFF the input power for three minutes or longer and then turn it back ON. Alternatively, turn OFF the remote control signal and then turn it back ON again.

5. Conducted emissions: The noise value is affected by factors such as the wiring method. The Power Supply conforms to Class B when the aluminum plate is laid under the Power Supply. For 600-W models, insert a clamp filter (ZCAT3035-1330 by TDK: 100 Ω min. [50 to 500 MHz], or the equivalent) in the input wire, and ring core (HF60T38X14X22 by TDK: 16 Ω typ. [1 MHz], 46 Ω typ. [10 MHz], or the equivalent) in the output wire to reduce noise

6. Radiated emissions: The noise value is affected by factors such as the wiring method. The Power Supply conforms to Class A when the aluminum plate is laid under the Power Supply (1,500-W models).

7. The measuring method conforms to JEITA standard RC-9131A. Refer to *Ripple* under *Safety Precautions* on page 32.

8. The Power Supply will not conform to safety standards if the customer replaces the fan.

Connections

■ Block Diagrams

S8VM-015□□□□ (15 W)

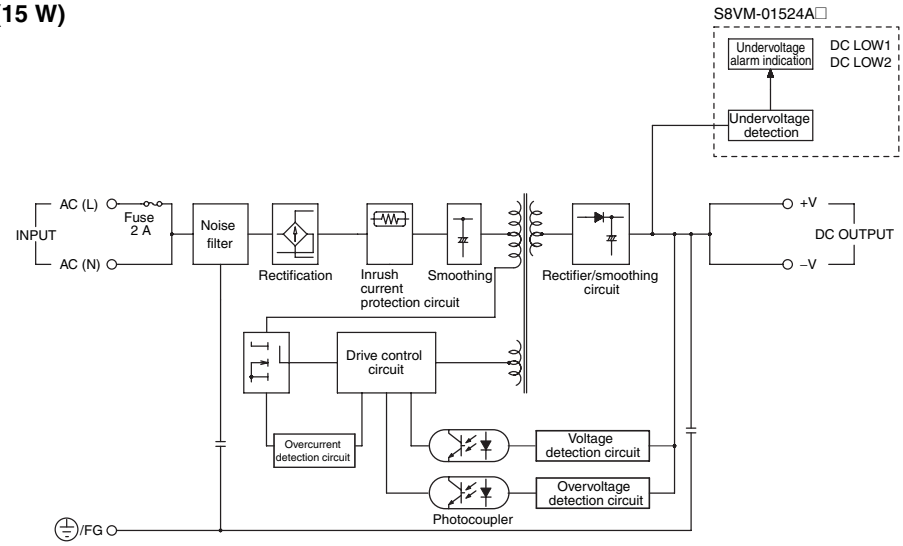

S8VM-030□□□□ (30 W)

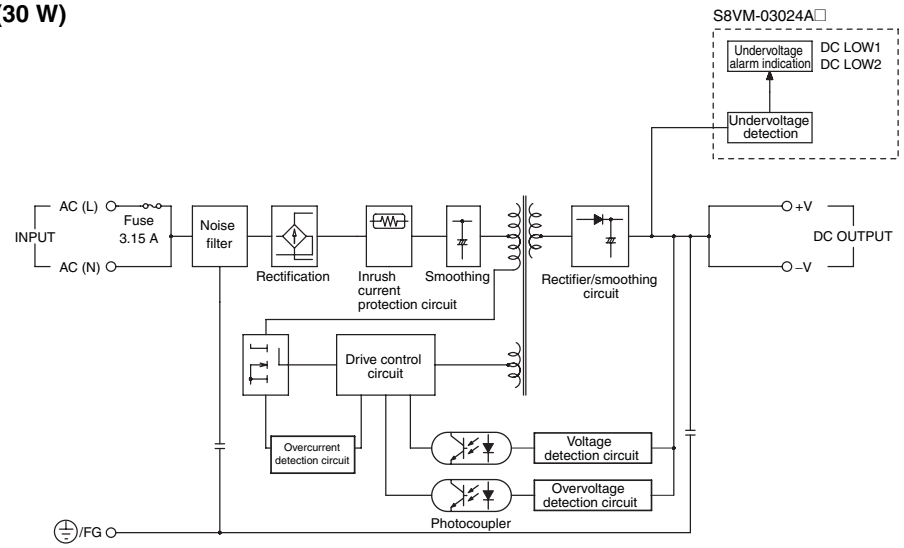

S8VM-050□□□□ (50 W)

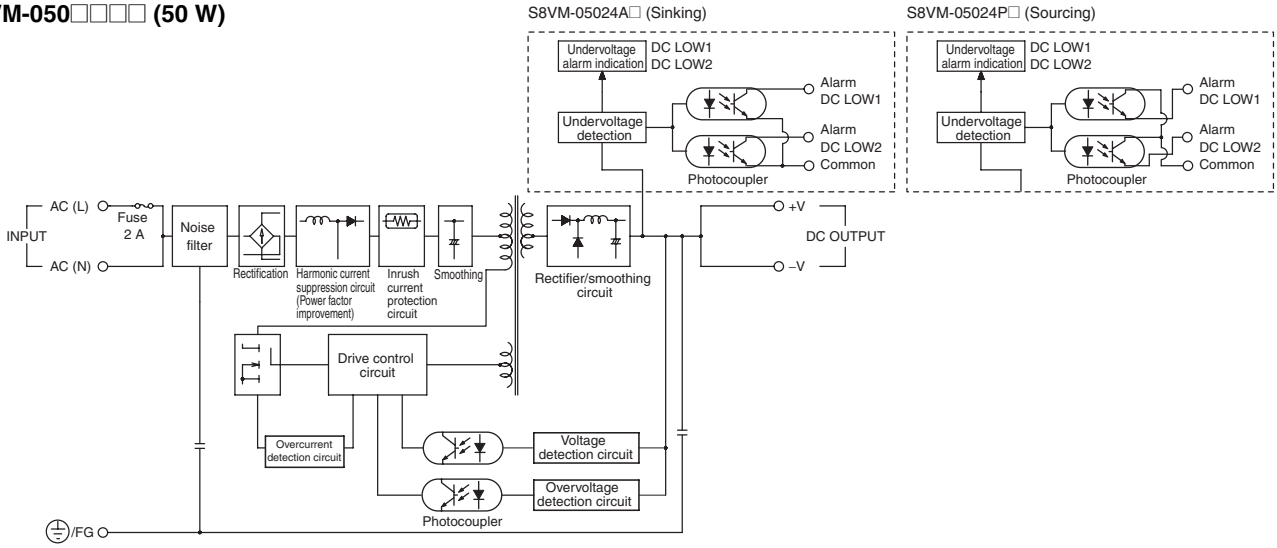

S8VM-100□□□□ (100 W)

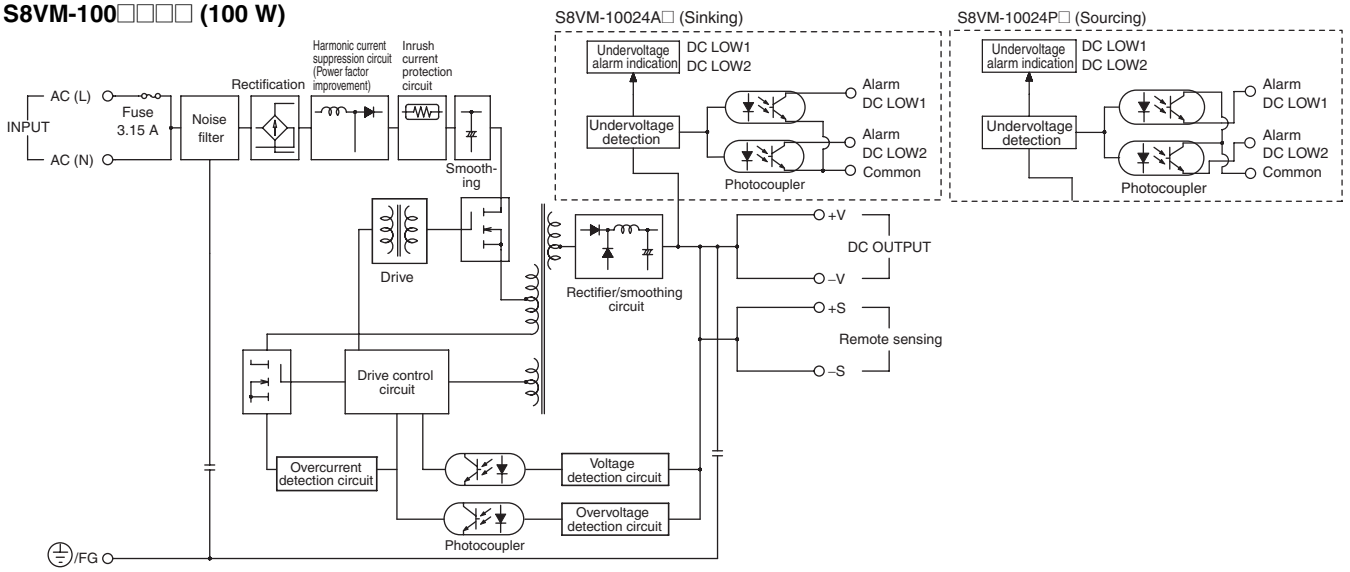

S8VM-150□□□□ (150 W)

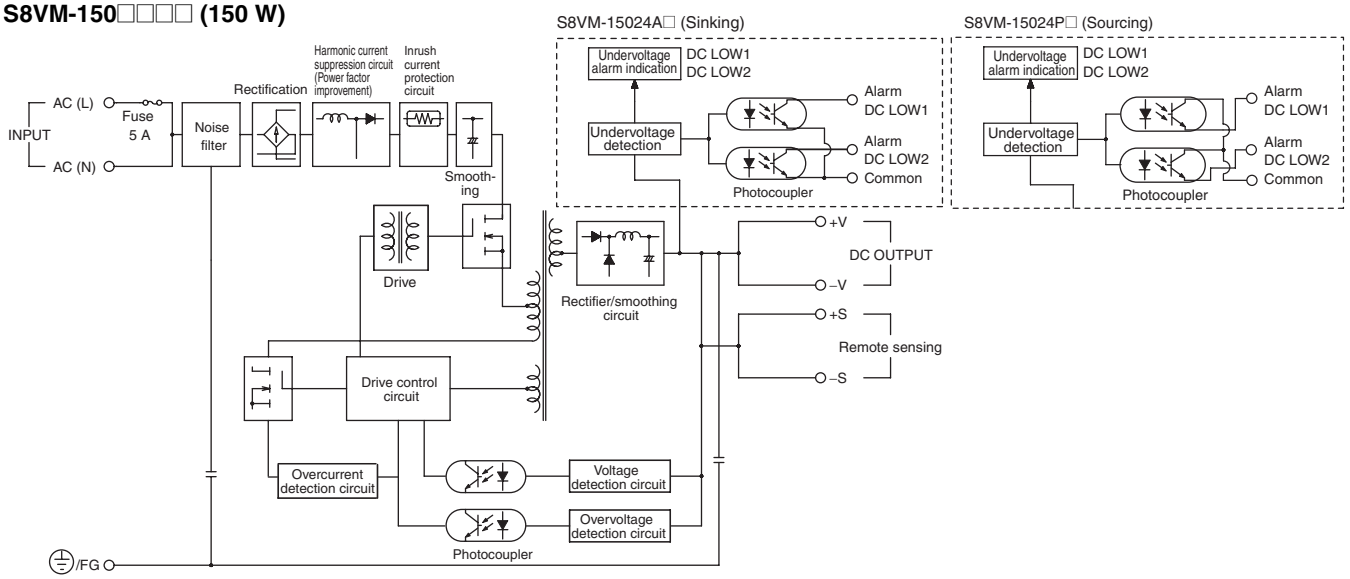

S8VM-300□□C (300 W)

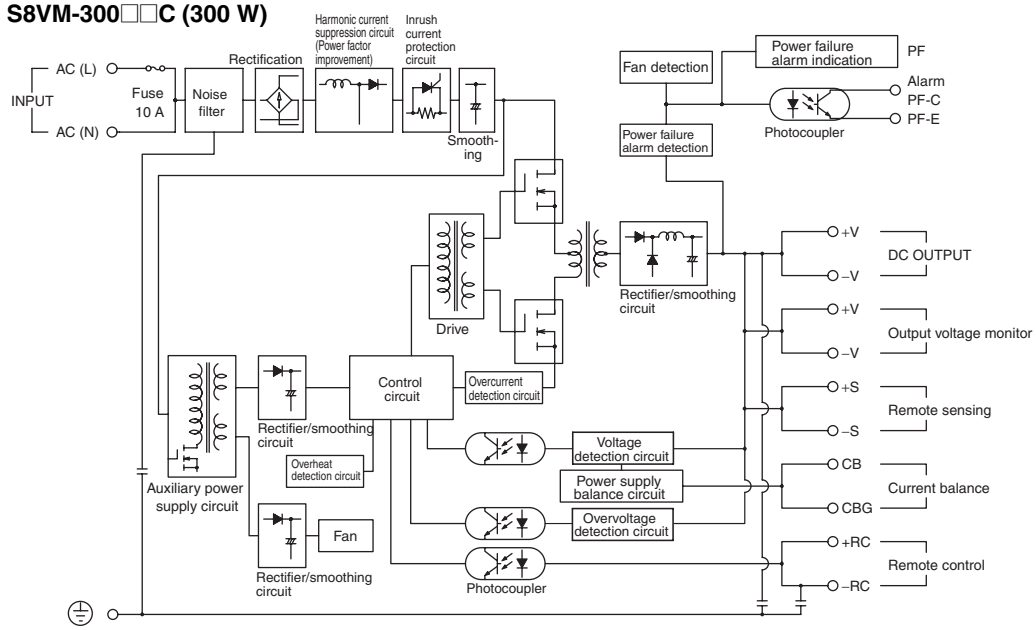

S8VM-600□□C (600 W)

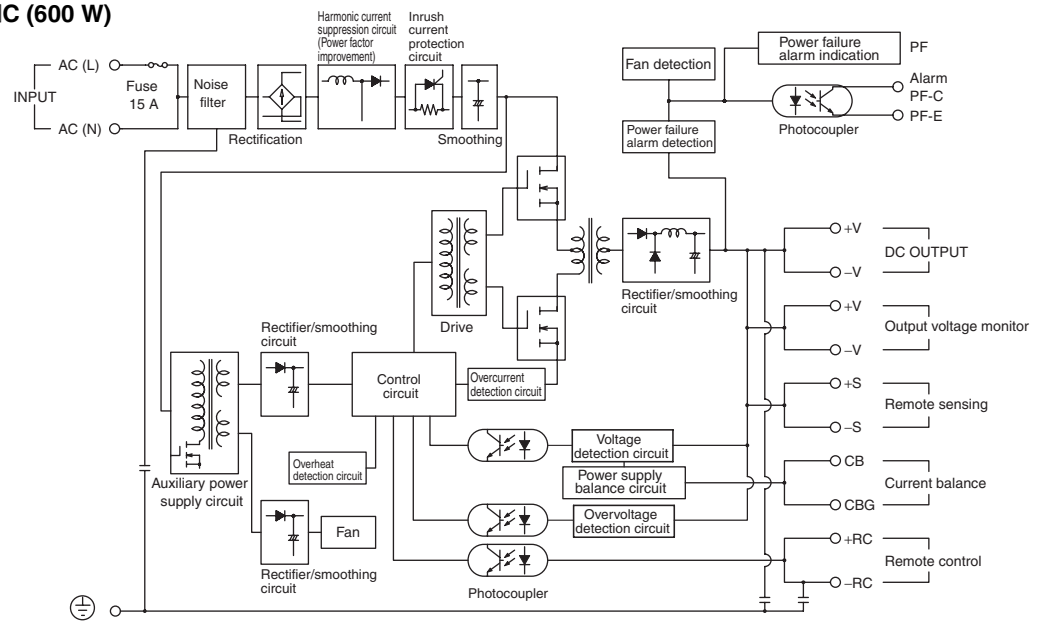

S8VM-15224C (1,500 W)

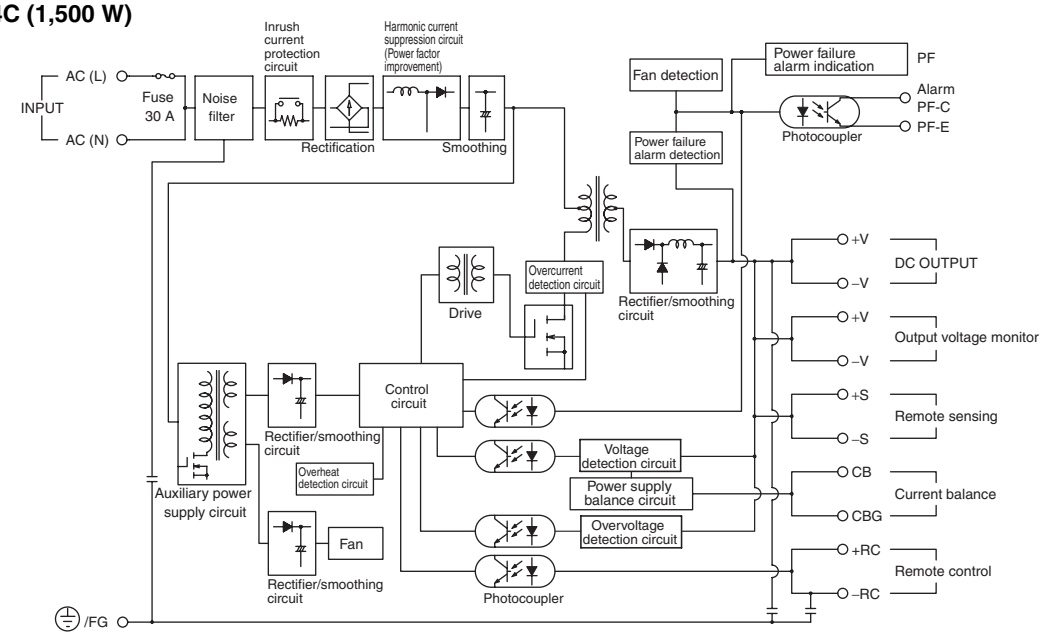

Construction and Nomenclature (15-W, 30-W, 50-W, 100-W, 150-W Models)

■ Nomenclature

15-W, 30-W, 50-W Models

Open-frame Models

S8VM-015□□/S8VM-015□□D
S8VM-030□□/S8VM-030□□D
S8VM-050□□/S8VM-050□□D

Covered Models

S8VM-015□□C□/S8VM-01524A□
S8VM-030□□C□/S8VM-03024A□
S8VM-050□□C□/S8VM-05024A□/P□

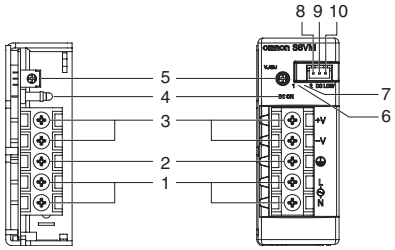

100-W Models

Open-frame Models

S8VM-100□□/S8VM-100□□D

Covered Models

S8VM-100□□C□/S8VM-10024A□/P□

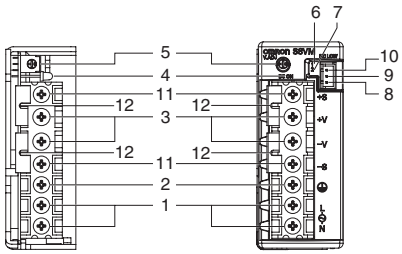

150-W Models

Open-frame Models

S8VM-150□□/S8VM-150□□D

Covered Models

S8VM-150□□C□/S8VM-15024A□/P□

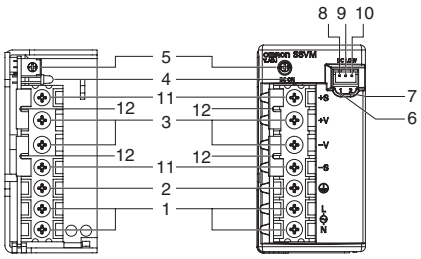

300-W, 600-W, 1,500-W Models

Note: Refer to page 14.

No.	Name	Function
1	AC input terminals (L), (N)	Connect the input lines to these terminals. (See note 1.)
2	PE terminal: Protective earthing terminal (S8VM-□□□□□C□/S8VM-□□□□□A□/ S8VM-□□□□□P□) FG terminal: Frame ground terminal (S8VM-□□□□□/S8VM-□□□□□D)	Connect the ground line to this terminal. (See note 2.)
3	DC output terminals (-V), (+V)	Connect the load lines to these terminals.
4	Output indicator (DC ON: Green)	Lights (green) while a direct current (DC) output is ON.
5	Output voltage adjuster (V. ADJ)	Use to adjust the voltage.
6	Undervoltage alarm indicator 1 (DC LOW1: Yellow) (See note 3.)	Lights only when a momentary drop in output voltage is detected. This status is maintained.
7	Undervoltage alarm indicator 2 (DC LOW2: Red) (See note 3.)	Lights only when the output voltage drops to approximately 20 V or lower.
8	Undervoltage alarm output terminal 1: (DC LOW1) (See note 4.)	Outputs only when a momentary drop in output voltage is detected. This status is maintained. (The transistor turns OFF when a voltage drop occurs.)
9	Undervoltage alarm output terminal 2: (DC LOW2) (See note 4.)	Outputs only when the output voltage drops to approximately 20 V or lower. (The transistor turns OFF when a voltage drop occurs.)
10	Common terminal for undervoltage alarm output (See note 4.)	Common terminal (See note 6.) for terminals 8 and 9
11	Remote sensing terminals (See note 5.)	Correct the voltage drop in the load lines.
12	Short bars (See note 5.)	---

Note: 1. The fuse is located on the (L) side. It is NOT user-replaceable.

2. If mounting is performed using a DIN Rail, the protective earthing connection is the panel mounting hole shown in the figure below.
(A protective earthing connection stipulated in safety standards is used. Connect the ground completely (S8VM-□□□□□D only)).
Ground terminal: M3 (Depth: 8 mm max.)/Ground wire: AWG 18

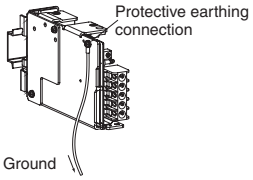

3. S8VM-□□□24A□/P□ only

4. S8VM-05024A□/P□, S8VM-10024A□/P□, S8VM-15024A□/P□ only. Housing and terminals of the connector for undervoltage detection output are also provided. For details, refer to *Undervoltage Alarm Output Connector Harness Manufacture Method* on page 33 under *Safety Precautions*.

5. When not using the remote sensing function, leave the short bar in the same state as when shipped.

6. A□ models: Common terminal (emitter)
P□ models: Common terminal (collector)

■ Output Color Label

This color label identifies the output voltage by color.

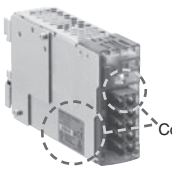

Green: 5 V
Blue: 12 V
Yellow: 15 V
White: 24 V

Engineering Data (15-W, 30-W, 50-W, 100-W, 150-W Models)

■ Derating Curve

15W/30W

Standard Mounting/Horizontal Mounting/Face-up Mounting

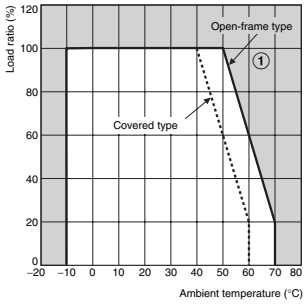

50W

Standard Mounting/Horizontal Mounting

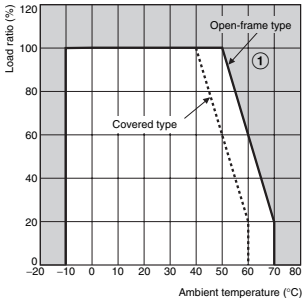

Face-up Mounting

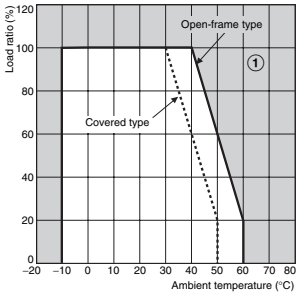

100W

Standard Mounting

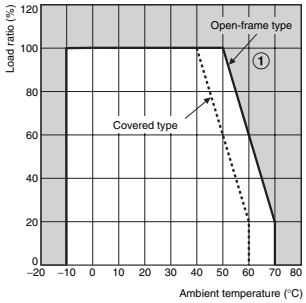

Horizontal Mounting/Face-up Mounting

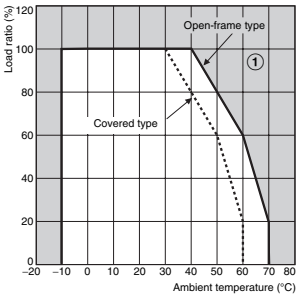

150W

Standard Mounting

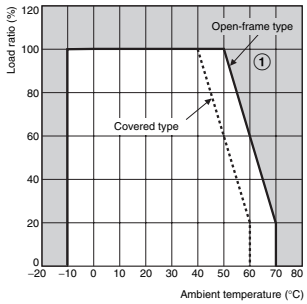

Horizontal Mounting

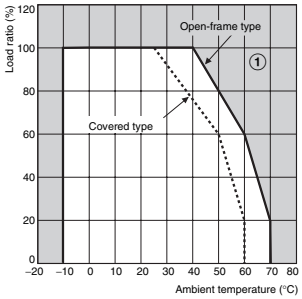

Face-up Mounting

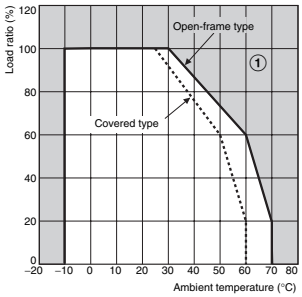

300W/600W/1,500W

Note: Refer to page 15.

Note: **1.** Internal parts may occasionally be deteriorated or damaged. Do not use the Power Supply in areas outside the derating curves (i.e., the area shown by shading ① in the above graphs).
2. If there is a derating problem, use forced air-cooling.
3. When mounting two or more Power Supplies side-by-side, allow at least 20 mm spacing between them. Multiple 100- and 150-W models cannot be used side by side. Be sure to install the Power Supplies as far away from heat-generating sources as possible. As a reference value, allow at least 50 mm spacing on the right and left sides. If only 20 mm spacing is allowed, use the Power Supply at a load ratio of 80% or less.
4. When using 150-W models for a long period of time at an input voltage of 90 VAC or lower, reduce the load to 80% or less of the above derating curves.

■ Mounting

Standard Mounting (DIN Rail Mounting Bracket Models)

Correct

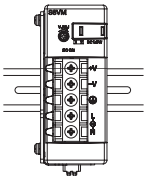

Standard Mounting (Bottom Mounting Models)

Correct

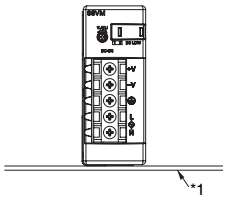

Horizontal Mounting

Correct

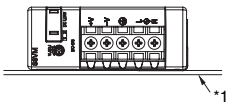

Face-up Mounting (DIN Rail Mounting Bracket Models)

Incorrect

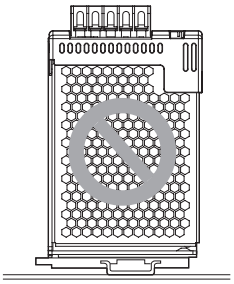

Face-up Mounting

Correct

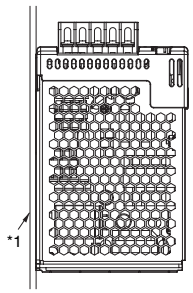

Face-down Mounting (DIN Rail Mounting Bracket Models)

Incorrect

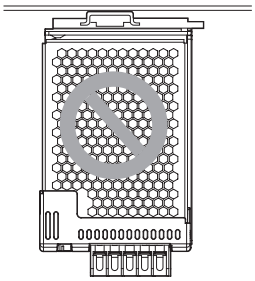

Face-down Mounting

Incorrect

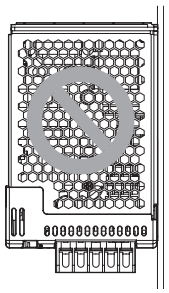

Surface Mounting for Standard Mounting Direction

Correct

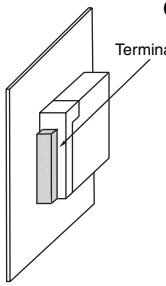

The terminals are in front.

Surface Mounting for Face-up Mounting

Correct

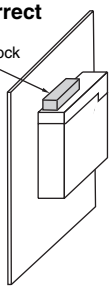

The terminals are on the top.

Note: 1. Improper mounting will interfere with heat dissipation and may occasionally result in deterioration or damage of internal parts.
Use the Power Supply within the derating curve for the mounting direction that is used.

2. Use the metal plate as the mounting panel (*1).

3. Install the Power Supply so that the air flow circulates around the Power Supply, as the Power Supply is designed to radiate heat by means of natural air flow.

4. Mounting screw tightening torque
(recommended value: M3 (0.49 N·m))

■ Remote Sensing Function

(S8VM-100□□□□/150□□□□ only)

This function compensates a voltage drop on the load lines.
To use this function, connect after removing the two short bars of the remote sensing terminal.

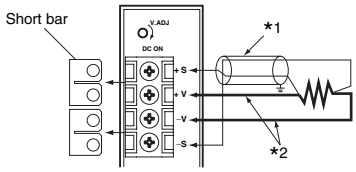

Note: 1. Use a 2-conductor shielded cable as a connection wire (*1).

2. Use as thick a wire as possible since high voltage drops on the load lines (*2) may activate the overvoltage protection function.

3. Use when the voltage drop is 0.3 V or lower.

4. When the +S and −S terminals are opened with the short bar removed, the overvoltage protection function is activated and the output voltage will be cut off.

5. If the load line is too long, use an electrolytic capacitor in the following 3 locations:
1) Across the load terminals
2) Between the +S terminal and + terminal
3) Between the −S terminal and − terminal
Select the capacity of the connected capacitor from between several tens to several hundreds of μF as a guide, and then determine the capacity when actually connecting the capacitor between terminals as shown below.

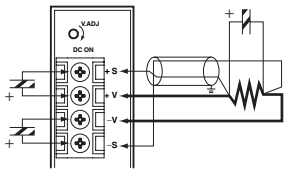

■ Inrush Current, Startup Time, Output Hold Time

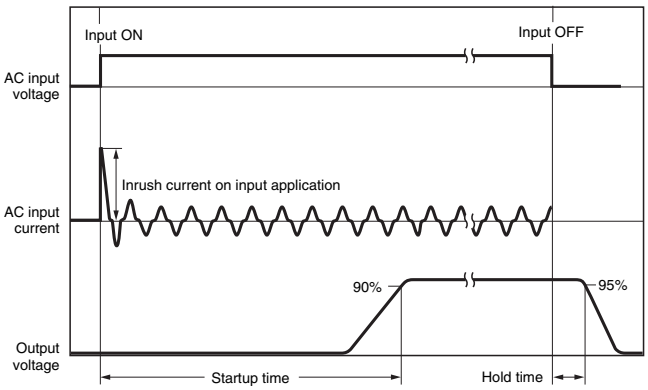

■ Reference Values

Item	Value	Definition
Reliability (MTBF)	135,000 hrs min.	MTBF stands for Mean Time Between Failures, which is calculated according to the probability of accidental device failures, and indicates the reliability of a device. Therefore, it does not necessarily represent the life of the Power Supply.
Life expectancy	10 yrs. min.	The life expectancy indicates average operating hours under the ambient temperature of 40°C and a load rate of 50%. Normally this is determined by the life expectancy of the built-in aluminum electrolytic capacitor.

■ Overload Protection

The Power Supply is provided with an overload protection function that protects the Power Supply from possible damage by short-circuit and overcurrent.
When the output current rises above 105% min. of the rated current, the protection function is triggered, automatically decreasing the output voltage. When the output current falls within the rated range, the overload protection function is automatically cleared.

15W/30W

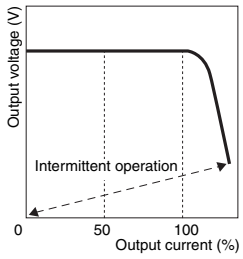

50W/100W/150W (5 V)

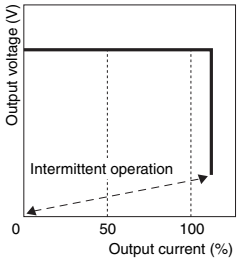

50W/100W/150W (12 V, 15 V, 24 V)

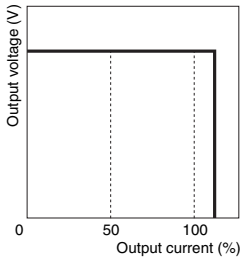

300W/600W/1,500W

Note: Refer to page 17.

The values shown in the above diagrams are for reference only.

Note: 1. Internal parts may occasionally deteriorate or be damaged if a short-circuited or other overcurrent state continues during operation.
Do not continue an overload state for longer than 30 seconds. Eliminate the overcurrent state as soon as possible.

2. Internal parts may possibly be deteriorated or damaged if the Power Supply is used for applications with frequent inrush current or overloading at the load end. Do not use the Power Supply for such applications.

■ Overvoltage Protection

Consider the possibility of an overvoltage and design the system so that the load will not be subjected to an excessive voltage even if the feedback circuit in the Power Supply fails. When an excessive voltage that is approximately 140% of the rated voltage or more is output, the output voltage is shut OFF, preventing damage to the load due to overvoltage. Reset the input power by turning it OFF for at least three minutes and then turning it back ON again.

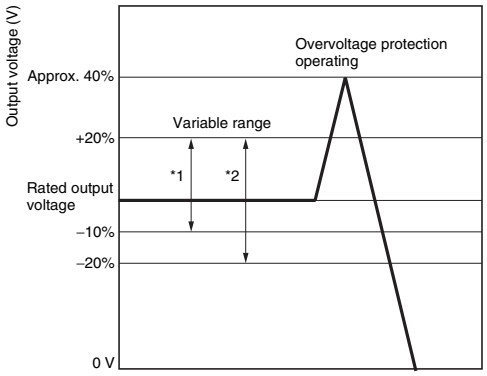

The values shown in the above diagram are for reference only.

*1 S8VM-□□□24A□/P□

*2 Except for S8VM-□□□24A□/P□

Note: 1. Do not turn ON the input power again until the cause of the overvoltage has been removed.

2. The overvoltage protection function may be activated when the output voltage adjuster (V.ADJ) is set to a value that exceeds +20% of the rated output voltage.

3. When the +S and −S terminals are opened with the short-bar removed, the overvoltage protection function is activated and the output voltage will be cut off.

■ Undervoltage Alarm Function (Indication and Output)

(Only S8VM-□□□24A□/P□)

If an output voltage drop is detected with an S8VM-□□□24A□/P□ with undervoltage alarm function, the DC LOW indicator will light to notify of an output error. The transistor also sends an output externally to notify of the error (except for the S8VM-01524A□ and S8VM-03024A□).

Transistor Output: Sinking type: (NPN) (S8VM-□□□24A□)
Sourcing type: (PNP) (S8VM-□□□24P□)
30 VDC max., 50 mA max., Residual voltage when ON: 2 V or less, Leakage current when OFF: 0.1 mA or less

S8VM-01524A□
S8VM-03024A□

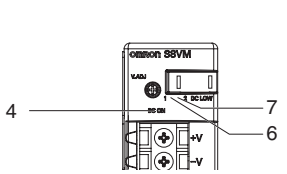

S8VM-05024A□/P□

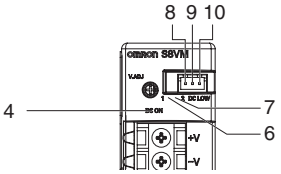

S8VM-10024A□/P□

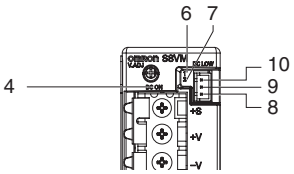

S8VM-15024A□/P□

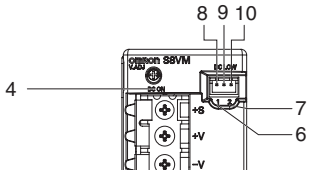

• Undervoltage Alarm Function 1 (DC LOW1)

Only a momentary voltage drop is detected. Detection voltage is automatically adjusted internally by detecting the output voltage (approx. 2.7 V lower than the voltage output at an output voltage of 24.0 V).
During detection, the transistor is OFF (with no continuity across 8 and 10) and the LED (6: Yellow) lights. (The Undervoltage Alarm Function 1 is used as a latch holding function.)

• Undervoltage Alarm Function 2 (DC LOW2)

Detection voltage is set to approx. 20.0 V (from 18.0 to 21.6 V).
During detection, the transistor is OFF (with no continuity across 9 and 10) and the LED (7: Red) lights.

Note: 1. This function monitors the voltage at the Power Supply output terminals.
To check actual voltage, measure voltage on the load side.

2. Gradual voltage drop is not detected by the Undervoltage Alarm Function 1 (DC LOW1).

3. Once a voltage drop in the output voltage is detected by Undervoltage Alarm Function 1 (DC LOW1), the transistor turns OFF and status of the LED (6: Yellow) light is maintained. To reset the function, turn OFF the input power for 60 seconds or longer, and then turn it ON again.

4. If the output voltage remains at 15 V or lower for several seconds when using Undervoltage Alarm Function 1 (DC LOW 1), the output hold status for detection may be reset.

■ Probable Causes of Power Supply Errors and Troubleshooting Using Undervoltage Alarm Function

Check the following information if the Undervoltage Alarm Function operates.

Contact your OMRON representative if the Power Supply does not function normally after checking.

The symbols in the table are as follows:

●: Lit, ○: Not lit, ✱: Flashing

Note: Flashing: The output voltage is unstable, causing the LED to repeatedly turn ON and OFF.

	DC ON	DC LOW1		DC LOW2			Output voltage	Power Supply status diagnosis	
	LED ④: Green	LED ⑥: Yellow	Transistor outputs (⑧ to ⑩)	LED ⑦: Red	Transistor outputs (⑨ to ⑩)				
1	●	○	ON	○	ON	→	Normal (approx. 90% min. of rated output voltage)	Normal status	
2	●	●	OFF	○	ON	→	Normal (approx. 90% min. of rated output voltage)	The output voltage has recovered to normal status following a previous sudden voltage drop.	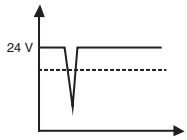
3	●	○	ON	●	OFF	→	Output drop (approx. 90% max. of rated output voltage)	The output voltage has dropped gradually and remains low.	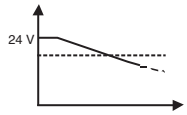
4	●	●	OFF	●	OFF	→	Output drop (approx. 90% max. of rated output voltage)	The output voltage remains low following a previous sudden voltage drop.	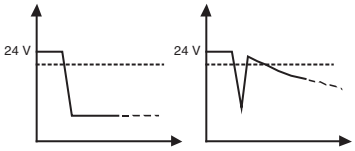
5	●	●	OFF	✱	ON ⇳ OFF	→	Output drop (approx. 80% of rated output voltage)	The output voltage remains low and is continuing to fluctuate following a previous sudden voltage drop.	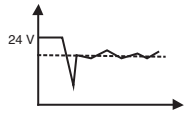
6	●	○	ON	✱	ON ⇳ OFF	→	Output drop (approx. 80% of rated output voltage)	The output voltage has dropped gradually, remains low, and is continuing to fluctuate.	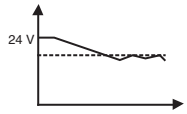
7	○	○	OFF	○	OFF	→	No output	No output voltage is being output.	
8	✱	✱	ON ⇳ OFF	✱	ON ⇳ OFF	→	Unstable output	The output voltage is unstable.	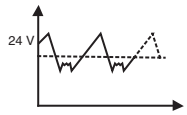

	Probable cause of error	Troubleshooting methods	
	---	---	1
	A momentary power failure has occurred in the input.	Check that the output voltage is normal and no problems have occurred in other devices. No problems will be caused by continuing to use the Power Supply as is. To clear DC LOW1 (LED display and transistor output status), turn OFF the input power, and wait at least 60 s before turning ON the input Power Supply again.	2
	A momentary overload has occurred.	The load current has probably exceeded the rated current. We suggest reducing the connected load or replace the Power Supply with one that has a higher capacity.	
	A momentary output voltage drop has occurred at startup due to the capacity of the capacitive factors on the load side or when the load is activated.	A large inrush current has probably flowed to the load side at startup. We suggest replacing the Power Supply with one that has a higher capacity.	
	The output voltage has returned to normal voltage following a rapid drop caused by using the output voltage adjuster (V.ADJ).	Turn OFF the input power, and wait at least 60 s before turning ON the input power again to clear the indicator status.	
	Deterioration due to age (when the Power Supply has been used for several years)	The internal parts of the Power Supply may have deteriorated due to age. We suggest replacing the Power Supply. Also replace other Power Supplies that were purchased at the same time.	3
	Overload (immediately following first use of the Power Supply or when increasing the load)	The load current has probably exceeded the rated current. Check the actual load current and Power Supply capacity. Continued use in overload status may damage the Power Supply.	
	The output voltage dropped to -10% or lower of the rated voltage resulting from using the output voltage adjuster (V.ADJ)	Adjust the output voltage to the rated values using the output voltage adjuster (V.ADJ).	
	A sudden overload occurred and the Power Supply remains in overload status.	An error has probably occurred in the load device. Turn OFF the input power, and check whether any errors have occurred in the load device. Continued use in overload status may damage the Power Supply.	4
	The output voltage remains low after a rapid voltage drop caused by using the output voltage adjuster (V.ADJ).	Adjust the output voltage to the rated values using the output voltage adjuster (V.ADJ). To clear DC LOW1 (LED display and transistor output status), turn OFF the input power, and wait at least 60 s before turning ON the input power again.	
	The overload status continues to fluctuate following a sudden overload.	An error has probably occurred in the load device. Turn OFF the input power, and check whether any errors have occurred in the load device. Continued use in overload status may damage the Power Supply.	5
	Deterioration due to age (after using the Power Supply for several years)	The internal parts of the Power Supply may have deteriorated due to age. Replace the Power Supply. Also replace other Power Supplies that were purchased at the same time.	6
	Overload (immediately following first use of the Power Supply or when increasing the load)	The load current has probably exceeded the rated current. Check the actual load current and Power Supply capacity. Continued use in overload status may damage the Power Supply.	
	Power Supply interrupted or damaged.	Check whether the input power is being applied correctly. If there is no output even though the input power is applied correctly, the internal circuit is probably damaged.	7
	Overvoltage protection operation	Turn OFF the input power, and wait at least 3 min before turning ON the input power again. If the same status recurs, the internal circuit is probably damaged.	
	The short bar has fallen off, or the +S and -S terminals are open.	Check whether the +S and -S terminals are open. If so, the overvoltage protection function is activated. Therefore, turn OFF the input power and wait at least three minutes before turning it ON again. (S8VM-10024A□/P□ and S8VM-15024A□/P□ models only)	
	Output short-circuit	Remove the cause of the output short-circuit.	
	Intermittent operation due to overload (S8VM-01524A□/03024A□ only)	The load current has probably exceeded the rated current. Check the actual load current and Power Supply capacity. Continued use in overload status may damage the Power Supply.	8
	The Power Supply fails to start repeatedly due to the capacity of the capacitive factors on the load side.	A large inrush current has probably flowed to the load side at startup. We suggest replacing the Power Supply with one that has a higher capacity.	
	The input turns ON and OFF repeatedly.	Check whether the Power Supply's input voltage is being applied correctly.	
	The status repeatedly switches between normal operation and output short-circuit.	An error has probably occurred in the load device. Turn OFF the input power, and check whether any errors have occurred in the load device.	

Construction and Nomenclature (300-W, 600-W, 1,500-W Models)

■ Nomenclature

300-W Models

S8VM-300□□C

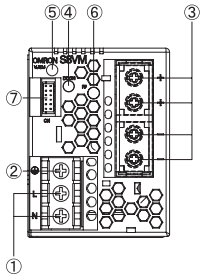

600-W Models

S8VM-600□□C

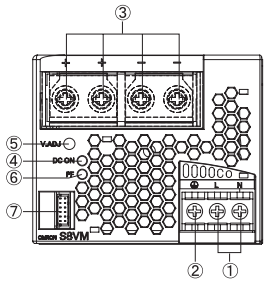

1,500-W Model

S8VM-15224C

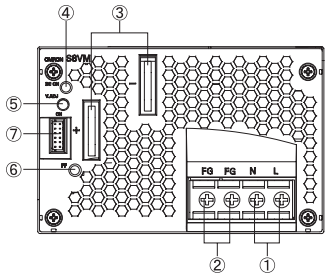

No.	Name	Function
1	AC input terminals (L), (N)	Connect the input lines to these terminals. (See note 1.)
2	PE terminal: Protective earthing terminal (⏚) (S8VM-300□□C/S8VM-600□□C) FG terminal: Frame ground terminal (S8VM-15224C)	Connect the ground line to this terminal. (See note 2.)
3	DC output terminals (–V), (+V)	Connect the load lines to these terminals.
4	Output indicator (DC ON: Green)	Lights (green) while a direct current (DC) output is ON.
5	Output voltage adjuster (V.ADJ)	Use to adjust the voltage.
6	Power failure alarm indicator (PF: Red)	Lights when the output voltage decreases, the fan stops, and the system is on standby using the remote control function.
7	Signal I/O connector (See note 3.) 2 4 6 8 10 12 1 3 5 7 9 11 CN	1: DC output monitor pin (+V) 2: Remote sensing pin (+S) 3: DC output monitor pin (–V) 4: Remote sensing pin (–S) 5: Current balance pin (CB) 6: Signal ground pin for current balance (CBG) 7: Remote control pin (+RC) 8: Remote control pin (–RC) 9: No connect 10: No connect 11: Power failure alarm output pin (PF-C) (collector) 12: Power failure alarm output pin (PF-E) (emitter)

Note: 1. The fuse is located on the (L) side. It is NOT user-replaceable.

2. Protective earthing connection is the panel mounting hole of the metal case. (A protective earthing connection stipulated in safety standards is used. Connect the ground completely).
Ground terminal: M4 (Depth: 6 mm max.)/Ground wire: AWG 18

3. The standard supplied connector for signal I/O is mounted to CN when S8VM is shipped. The supplied signal I/O connector shorts between 1 and 2, between 3 and 4, and between 7 and 8. **The stability and accuracy of the output will deteriorate if the connector is removed. Always connect the +S and -S pins.**
Do not connect a load to the output voltage monitor terminals (+V, –V).

■ Output Color Label

This color label identifies the output voltage by color.

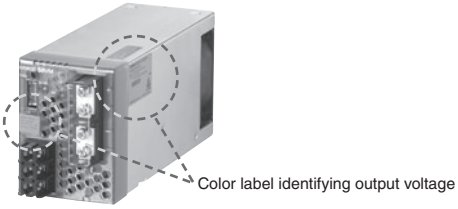

Green: 5 V
Blue: 12 V
Yellow: 15 V
White: 24 V

Note: A 300-W model is shown above. The label is in a different place on 600-W models and 1,500-W model.

Engineering Data (300-W, 600-W, 1,500-W Models)

■ Derating Curve

300W/600W/1,500W

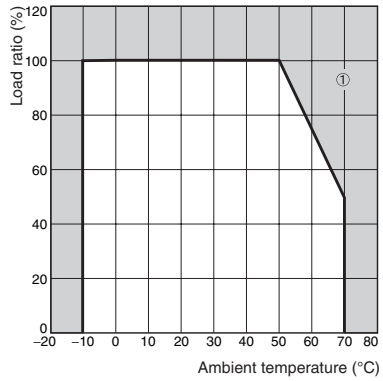

Note: 1. Internal parts may occasionally be deteriorated or damaged. Do not use the Power Supply in areas outside the derating curves (i.e., the area shown by shading ① in the above graph).

2. When mounting two or more Power Supplies side-by-side, allow at least 20 mm spacing between them. Always provide at least 50 mm of mounting space for the surface with the fan mounted. Be sure to provide at least 50 mm (S8VM-300□□C/600□□C) or 100 mm (S8VM-15224C) of mounting space on the opposite side of the surface with the fan mounted.

3. When using the 1,500-W model for a long period of time at an input voltage of 90 VAC or lower, reduce the load to 80% or less of the above derating curve.

4. The ambient temperature is specified at a location 50 mm in front of the center of the Power Supply's front panel.

■ Mounting

Standard Mounting

Correct **Correct** **Correct**

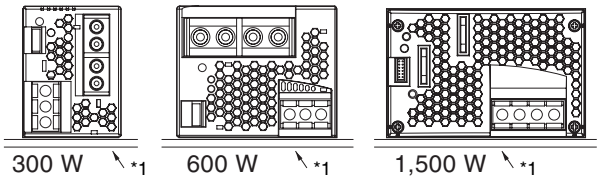

Horizontal Mounting

Correct **Correct** **Correct**

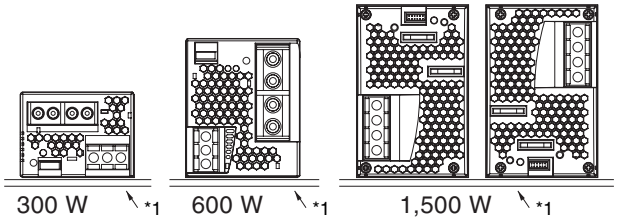

Upside-down Mounting (S8VM-15224C Only)

Correct

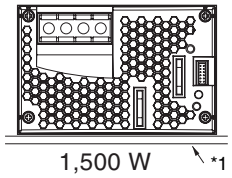

Side Mounting

Incorrect **Incorrect** **Incorrect**

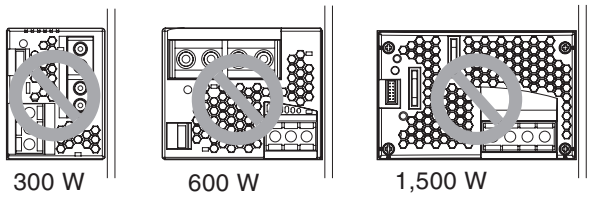

Note: 1. The internal parts may occasionally deteriorate or be broken due to adverse heat dissipation depending on the mounting status. Do not use the Power Supply in any mounting direction other than those specified.

2. Use the metal plate as the mounting panel (*1).

3. To ensure sufficient cooling, do not cover the air holes located on the side the fan is mounted and the opposite side.

4. Mounting screw tightening torque (recommended value: M4 (1.27 N·m))
The screws must not protrude more than 6 mm inside the Power Supply.

■ Remote Sensing Function

This function is used to compensate for voltage drops on the load lines. Connect the +S pin (pin 2 on CN) to the positive load terminal and the –S pin (pin 4 on CN) to the negative load terminal to enable remote sensing. When not using the remote sensing function, use the standard supplied connector. The +S and +V pins (pin 1 on CN) and the –S and –V pins (pin 3 on CN) will be connected.

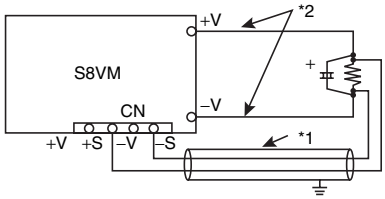

Note: 1. Use 2-conductor shielded cable as connection wire (* 1).

2. Use as thick a wire as possible since high voltage drops on the load lines (* 2) may activate the overvoltage protection function.

3. Use when the voltage drop is 0.3 V or lower.

4. If the sensing line is too long, it is necessary to put an electrolytic capacitor across the load terminals. The electrolytic capacitor may generate heat due to the ripple current, depending on connected load. Therefore, the electrolytic capacitor must have a ripple current allowance higher than the output ripple current.

5. The stability and accuracy of the output will deteriorate if the short bar is missing or if the +S and –S pins are open. Always connect the +S and –S pins.

6. Remove the standard supplied connector and prepare a connector harness separately.

■ Remote Control Function

This function turns outputs ON and OFF using an external signal while input voltage is applied, using the +RC pin (pin 7 on CN) and the -RC pin (pin 8 on CN). Connect a switch or transistor to the +RC and -RC pins to use the remote control function. When not using this function, the +RC and -RC pins are shorted by using the standard supplied connector.

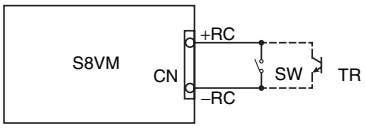

+RC Level for –RC	Output voltage	Built-in Fan Motor
Short or L (0 to 0.8 V)	ON	Rotate
Open or H (2.4 to 12 V)	OFF	Stop

Maximum input voltage: 12 V max.

Maximum allowable reverse voltage: –1 V max.

Sink Current: 3.5 mA

Note: 1. Use 2-conductor shielded cable or twisted-pair cable as connection wire.

2. The remote control circuit is isolated from the input and output circuits of the power supply.

3. Remove the standard supplied connector and prepare a connector harness separately.

■ Power Failure Alarm Function

The power failure alarm indicator will light red to indicate an output voltage error if overload, overvoltage, or overheat protection is activated, if a drop in the input voltage causes the output voltage to drop, if the built-in fan motor stops, and during remote control standby. The alarm is also output externally by a transistor.

Transistor output: 30 VDC max., 50 mA max.

Residual voltage when ON: 2 V max.

Leakage current when OFF: 0.1 mA max.

Alarm detection voltage: Approx. 80% of output voltage setting

During detection, the transistor is OFF (with no continuity across pins 11 and 12 on CN), and the LED (red) lights.

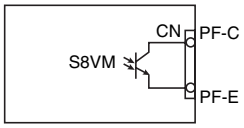

Note: 1. This function monitors the voltage at the power supply output terminals. To check actual voltage, measure the voltage on the load side.

2. Outputs are forced OFF if the built-in fan motor stops (S8VM-15224C only).

3. Remove the standard supplied connector and prepare a connector harness separately.

■ Inrush Current, Startup Time, Output Hold Time

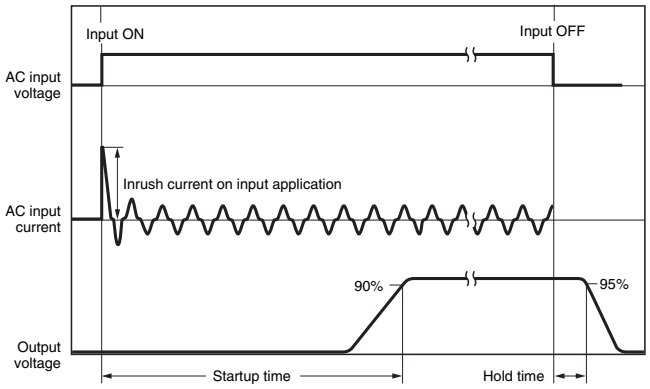

Note: A maximum input surge current of approx. 40 A will flow at startup even when not turning ON the input. Consider this surge current when selecting the input switch, input breaker, or external fuse.

■ Input Current Waveform When Input Is Turned ON

The following examples show typical waveforms.

S8VM-300□□C

100 VAC, Load ratio: 100%

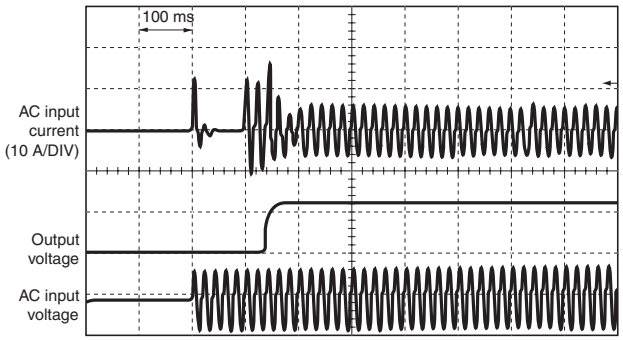

200 VAC, Load ratio: 100%

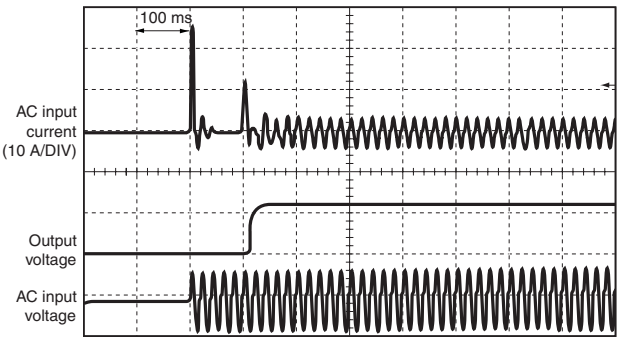

S8VM-600□□C

100 VAC, Load ratio: 100%

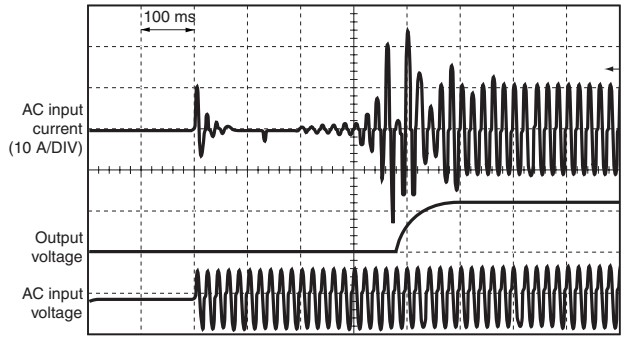

200 VAC, Load ratio: 100%

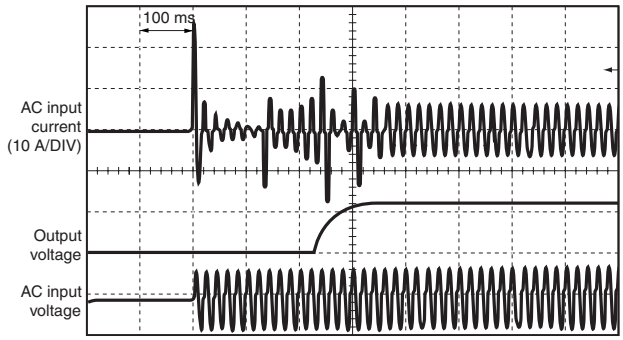

S8VM-15224C

100 VAC, Load ratio: 100%

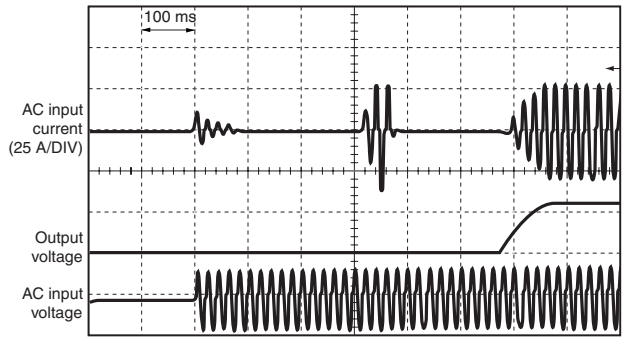

200 VAC, Load ratio: 100%

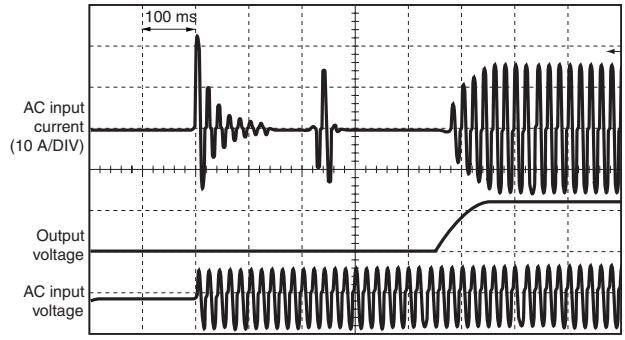

■ Reference Values

Item	Value	Definition
Reliability (MTBF)	300 W: 135,000 hrs 600 W: 120,000 hrs 1,500 W: 100,000 hrs	MTBF stands for Mean Time Between Failures, which is calculated according to the probability of accidental device failures, and indicates the reliability of a device. Therefore, it does not necessarily represent the life of the Power Supply.
Life expectancy	10 yrs. min.	The life expectancy indicates average operating hours under the ambient temperature of 40°C and a load rate of 50%. Normally this is determined by the life expectancy of the built-in aluminum electrolytic capacitor.

■ Overload Protection

The Power Supply is provided with an overload protection function that protects the Power Supply from possible damage by overcurrent. When the output rises above 105% of the rated current, the protection function is triggered, automatically decreasing the output voltage.

S8VM-300□□C/600□□C

When the output current returns within the rated range, overload protection is automatically cleared.

S8VM-15224C

Outputs are interrupted if an overload continues for 5 seconds or more. To reset the Power Supply, leave the input power OFF for more than 3 minutes and then turn it ON again. Alternatively, turn OFF and ON the remote control signal.

300W/600W (5 V)

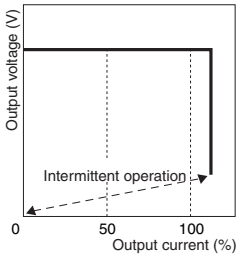

300W600W/1,500W (12 V, 15 V, 24 V)

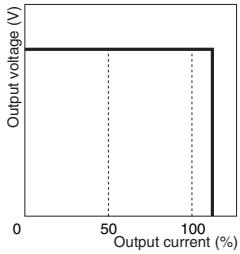

The values shown in the above diagrams are for reference only.

Note: 1. If the Power Supply has been short-circuited or supplied with an overcurrent for longer than 30 seconds, the internal parts of the Power Supply may occasionally be deteriorated or damaged.

2. The internal parts may possibly be deteriorated or damaged. Do not use the Power Supply for applications where the load causes frequent inrush current and overload.

■ Overvoltage Protection

Consider the possibility of an overvoltage and design the system so that the load will not be subjected to an excessive voltage even if the feedback circuit in the Power Supply fails. When an excessive voltage that is approximately 140% of the rated voltage or more is output, the output voltage is shut OFF, preventing damage to the load due to overvoltage. Reset the input power by turning it OFF for at least three minutes and then turning it back ON again. Alternatively, turn OFF and ON the remote control signal.

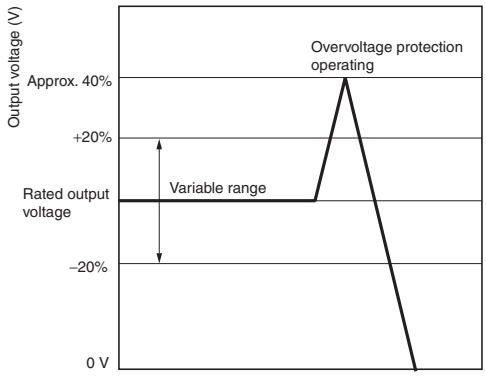

The values shown in the above diagram are for reference only.

Note: 1. Do not turn ON the input power again until the cause of the overvoltage has been removed.

2. The overvoltage protection function may be activated when the output voltage adjuster (V.ADJ) is set to a value that exceeds +20% of the rated output voltage.

■ Overheat Protection

The overheat protection circuit will operate and outputs will be shut OFF to protect the Power Supply if the ambient temperature rises, the fan stops, or other errors cause the Power Supply's internal temperature to rise. To reset the Power Supply, leave the input power OFF long enough for the Power Supply to cool sufficiently and then turn it ON again. Alternatively turn OFF the remote control signal long enough to cool sufficiently and then turn it ON again.

■ Peak Output Current

(S8VM-30024C/60024C/15224C Only)

The peak current must satisfy the following conditions. Reduce the peak current according to the load rate of the derating curve.

Input voltage range: 180 to 240 VAC
Peak current pulse width: 10 s max.
Duty: 35% max.
Peak current value: Within the rated peak current
Effective output current: Within the rated current

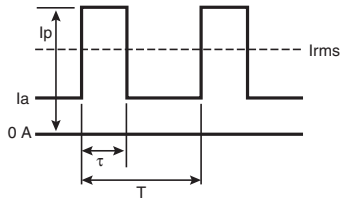

Ip: Peak current (A)
Irms: Effective output current (A)
Iav: Rated current (A)
Ia: Continuous load current (A)
D: Duty
τ: Peak current pulse width (s)
T: Cycle (s)

$$Iav \geq Irms = \sqrt{Ip^2 \times D + Ia^2 \times (1-D)}$$

$$D = \frac{\tau}{T}$$

Dimensions

Note: All units are in millimeters unless otherwise indicated.

■ Bottom Mounting Models (15-W, 30-W, 50-W, 100-W, 150-W Models)

S8VM-015□□
S8VM-015□□C
S8VM-01524A

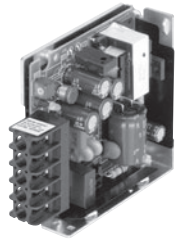

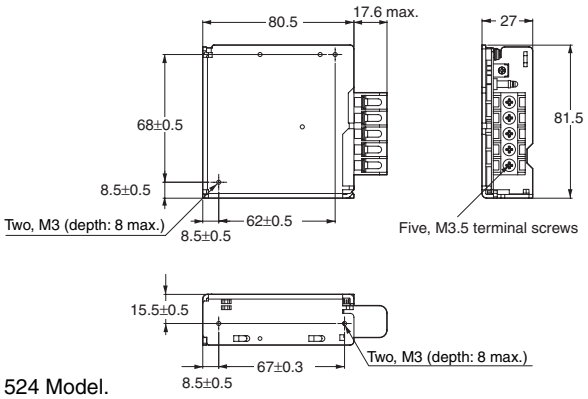

Note: The image is the S8VM-01524 Model.



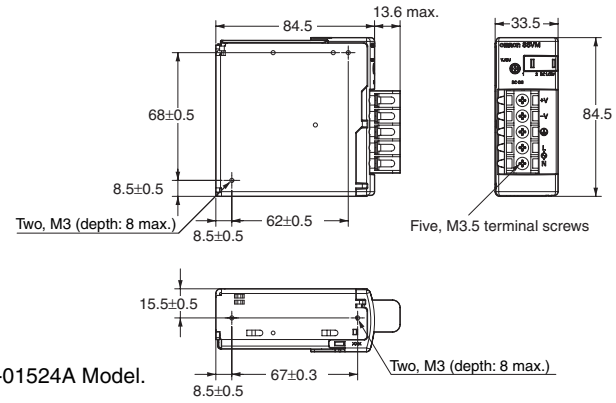

Note: The image is the S8VM-01524A Model.

Mounting Holes

	Bottom View
Side Mounting	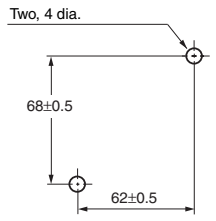
Bottom Mounting	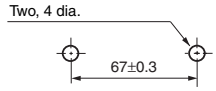

S8VM-030□□
S8VM-030□□C
S8VM-03024A

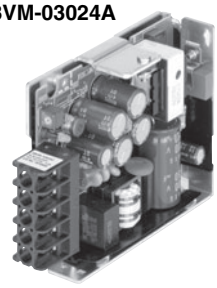

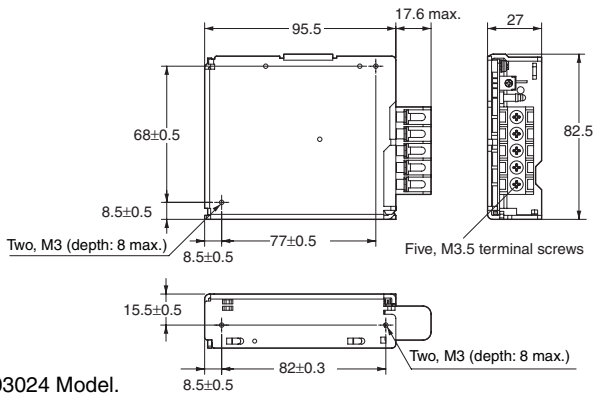

Note: The image is the S8VM-03024 Model.

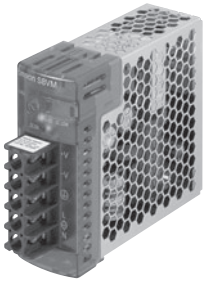

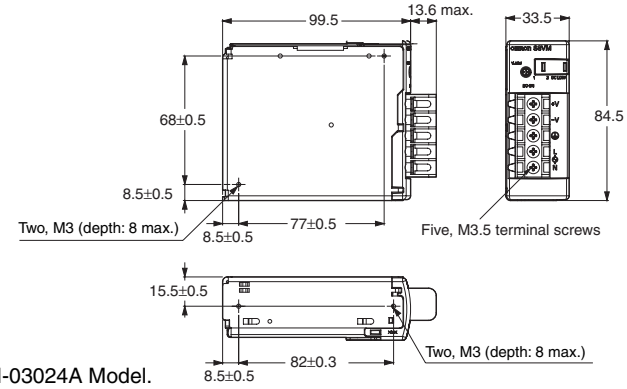

Note: The image is the S8VM-03024A Model.

Mounting Holes

	Bottom View
Side Mounting	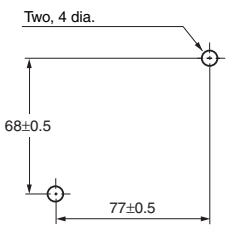
Bottom Mounting	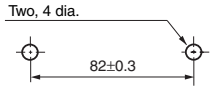

S8VM-050□□
S8VM-050□□C
S8VM-05024A
S8VM-05024P

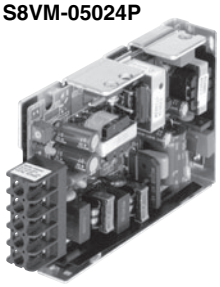

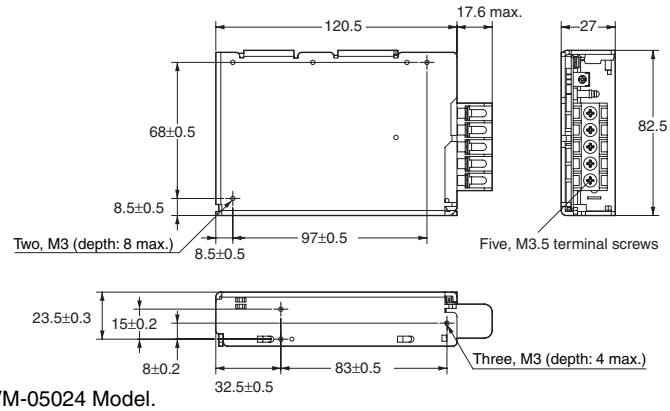

Mounting Holes

	Bottom View
Side Mounting	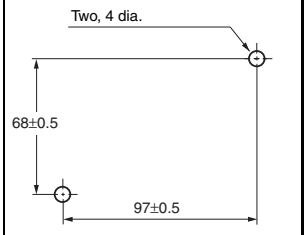
Bottom Mounting	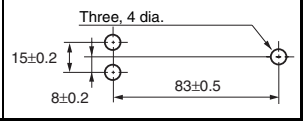

Note: The image is the S8VM-05024 Model.



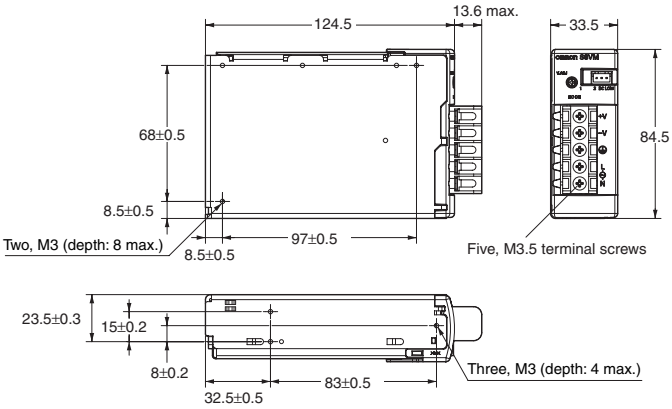

Note: The image is the S8VM-05024A Model.

S8VM-100□□
S8VM-100□□C
S8VM-10024A
S8VM-10024P

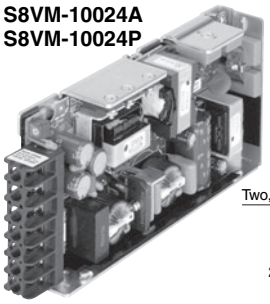

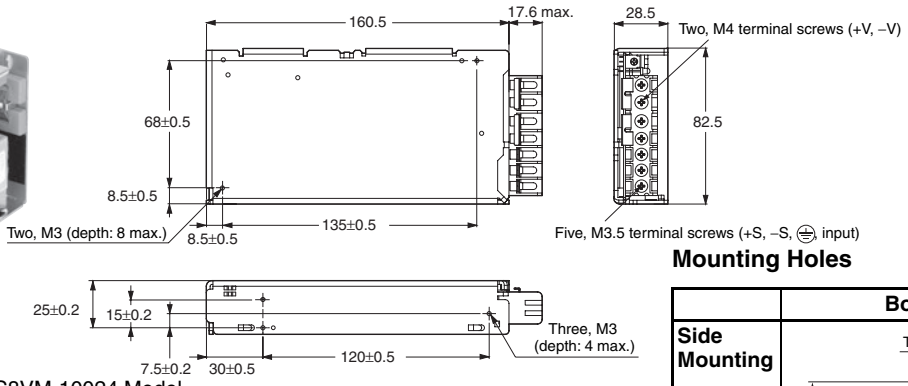

Mounting Holes

	Bottom View
Side Mounting	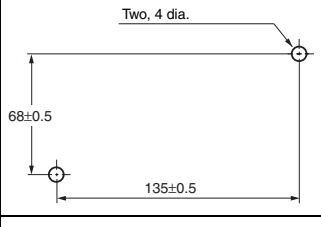
Bottom Mounting	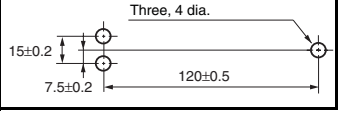

Note: The image is the S8VM-10024 Model.

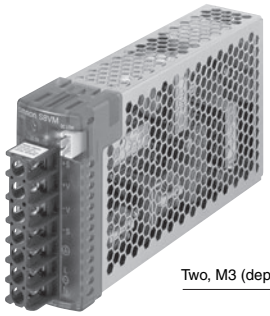

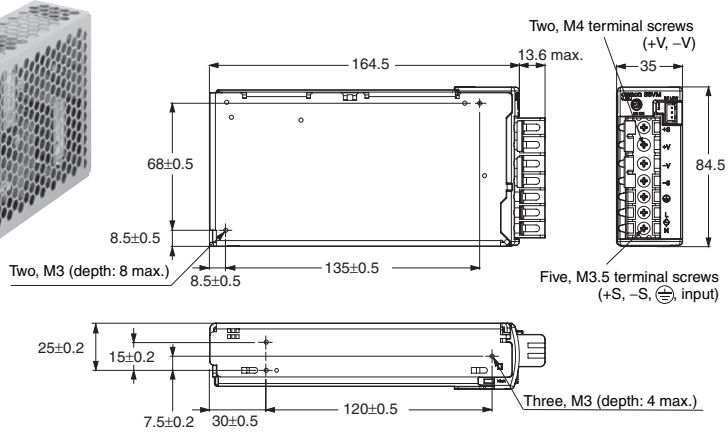

Note: The image is the S8VM-10024A Model.

S8VM-150□□
S8VM-150□□C
S8VM-15024A
S8VM-15024P

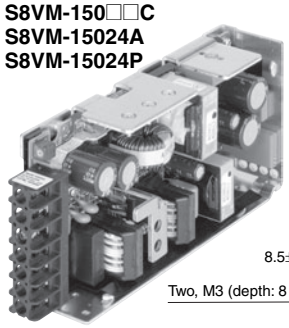

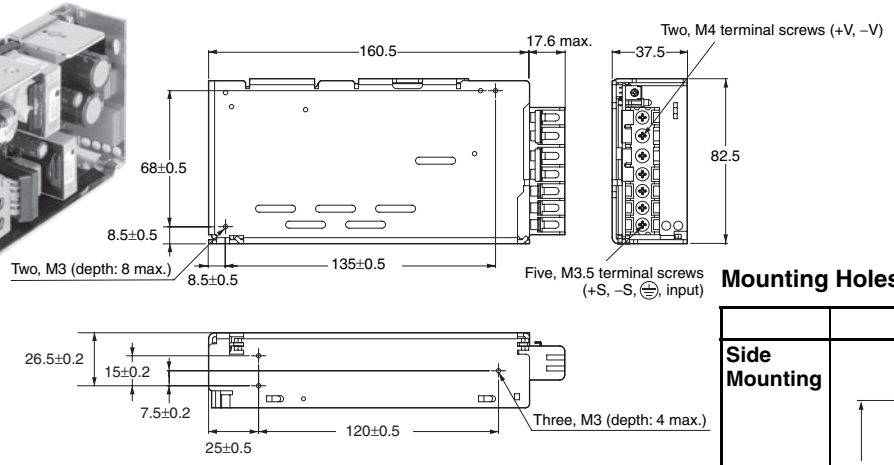

Note: The image is the S8VM-15024 Model.

Mounting Holes

	Bottom View
Side Mounting	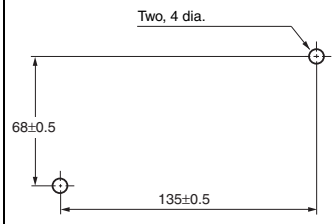
Bottom Mounting	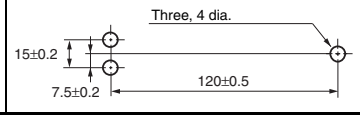

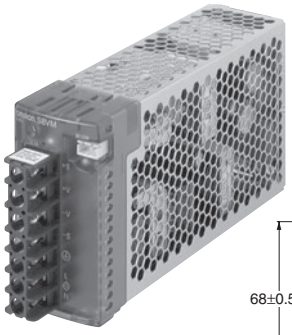

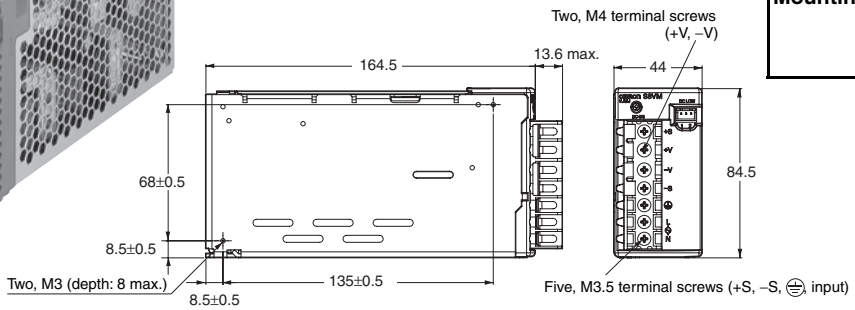

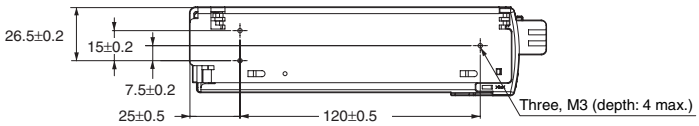

Note: The image is the S8VM-15024A Model.

■ DIN Rail Mounting Bracket Models (15-W, 30-W, 50-W, 100-W, 150-W Models)

S8VM-015□□D
S8VM-015□□CD
S8VM-01524AD

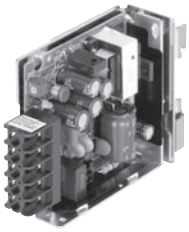

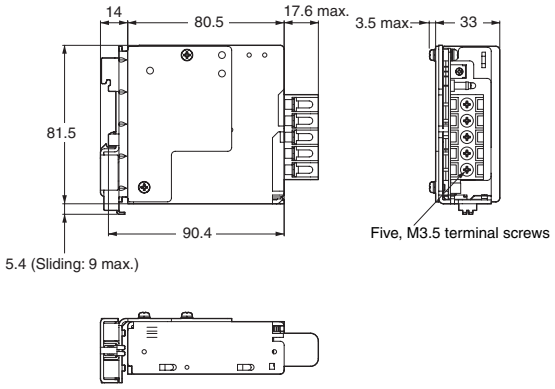

Note: The image is the S8VM-01524D Model.



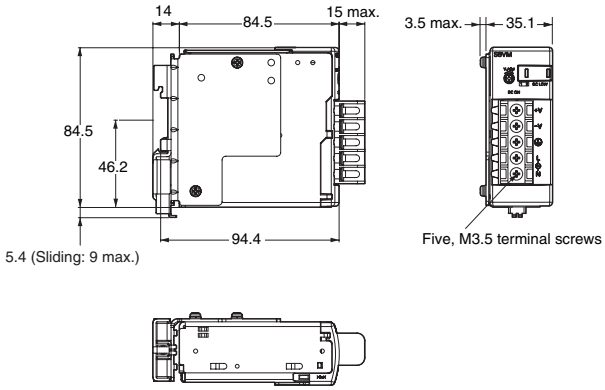

Note: The image is the S8VM-01524AD Model.

S8VM-030□□D
S8VM-030□□CD
S8VM-03024AD

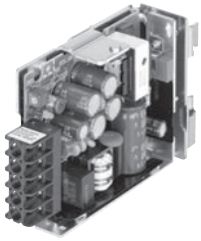

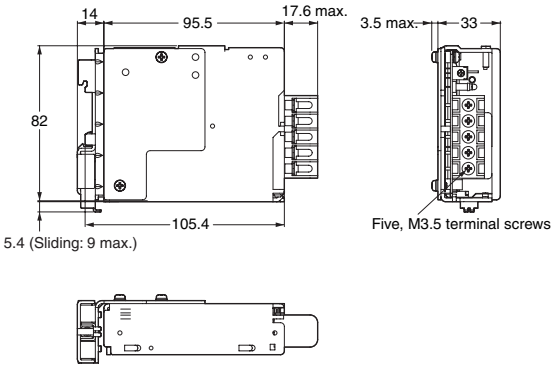

Note: The image is the S8VM-03024D Model.



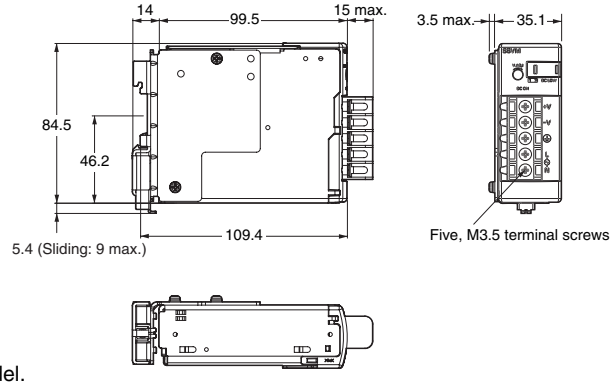

Note: The image is the S8VM-03024AD Model.

S8VM-050□□D
S8VM-050□□CD
S8VM-05024AD
S8VM-05024PD

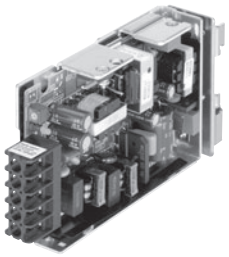

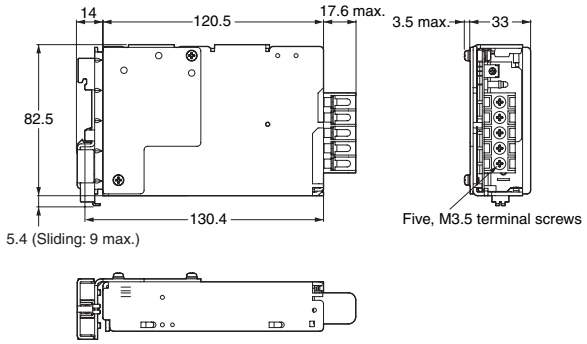

Note: The image is the S8VM-05024D Model.



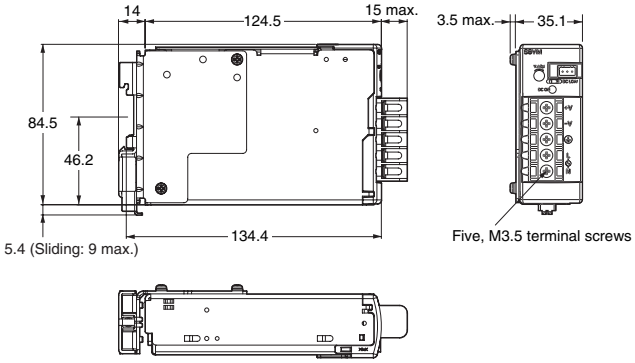

Note: The image is the S8VM-05024AD Model.

S8VM-100□□D
S8VM-100□□CD
S8VM-10024AD
S8VM-10024PD

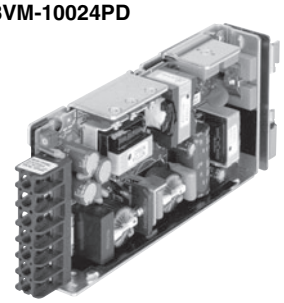

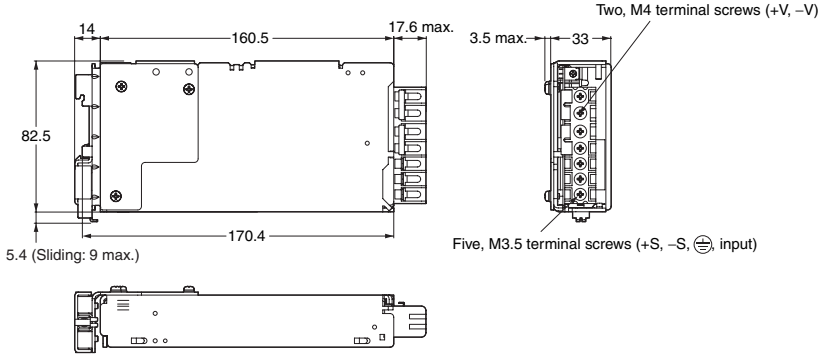

Note: The image is the S8VM-10024D Model.

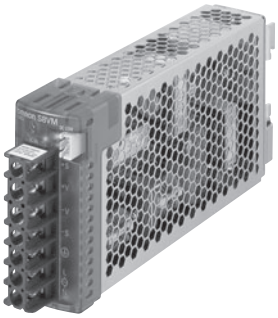

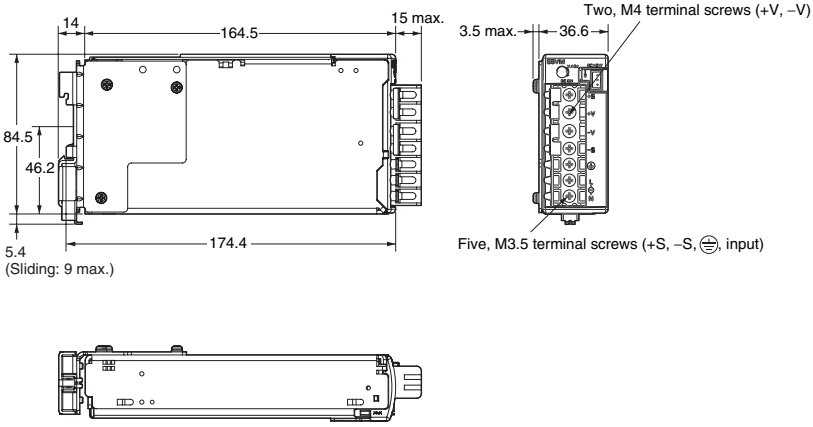

Note: The image is the S8VM-10024AD Model.

S8VM-150□□D
S8VM-150□□CD
S8VM-15024AD
S8VM-15024PD

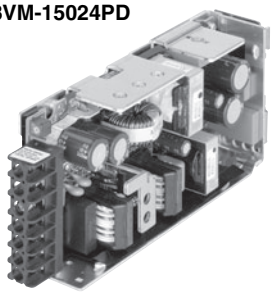

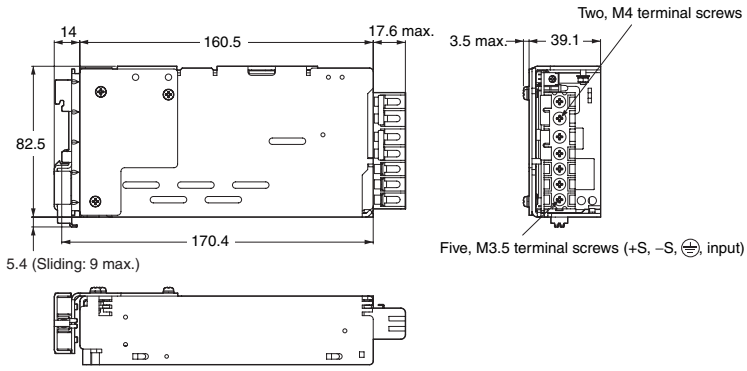

Note: The image is the S8VM-15024D Model.

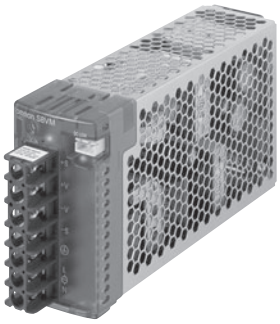

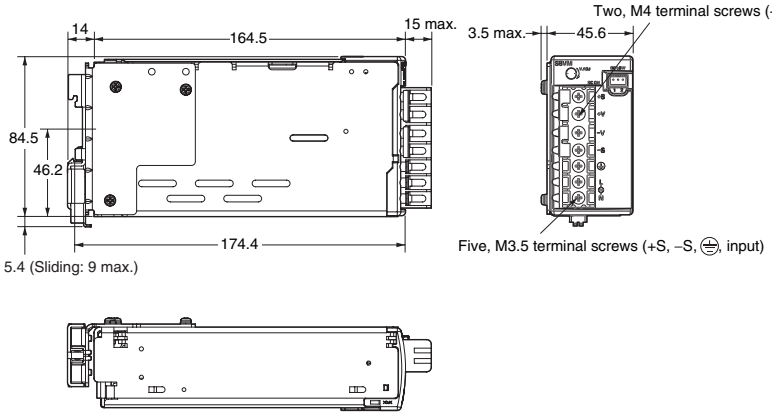

Note: The image is the S8VM-15024AD Model.

■ Bottom Mounting Models (300-W, 600-W, 1,500-W Models)

S8VM-300□□C



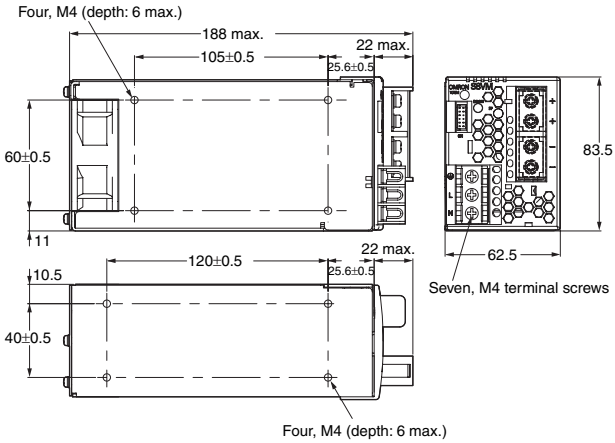

Mounting Holes

	Bottom View
Standard Mounting	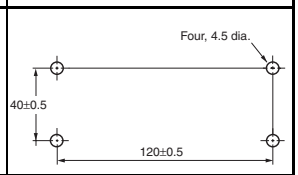
Horizontal Mounting	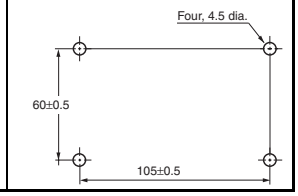

Note: The image is the S8VM-30024C Model.

S8VM-600□□C



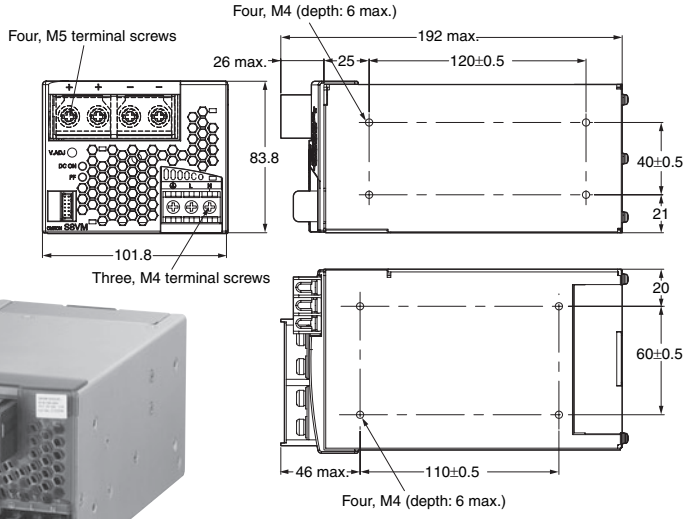

Mounting Holes

	Bottom View
Standard Mounting	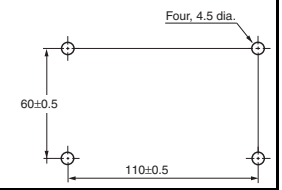
Horizontal Mounting	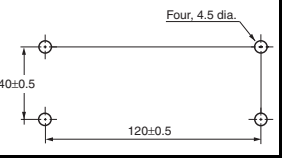

Note: The image is the S8VM-60024C Model.

S8VM-15224C



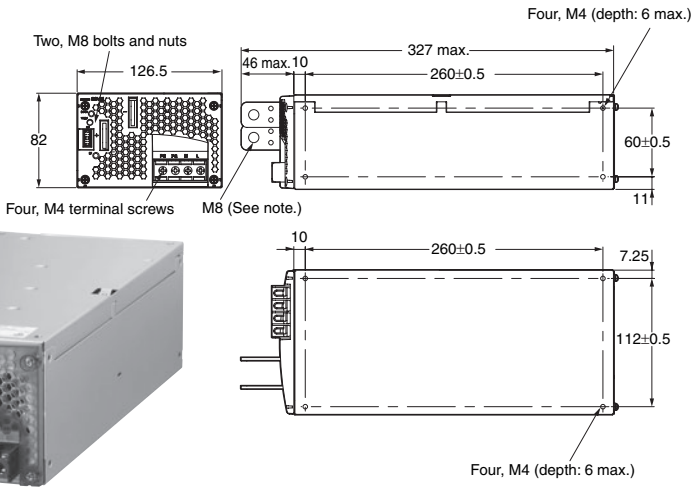

Mounting Holes

	Bottom View
Standard Mounting	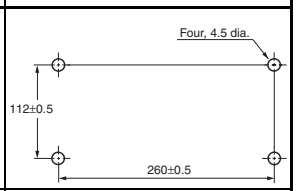
Horizontal Mounting	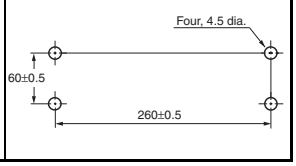

Note: M8 bolts and nuts for the output terminals are not included.

■ Mounting Brackets

Name	Model
Mounting Bracket A (bottom mounting for 15-, 30-, and 50-W models)	S82Y-VM10B
Mounting Bracket B (bottom mounting for 100- and 150-W models)	S82Y-VM20B
Mounting Bracket C (front mounting for 15-, 30-, 50-, 100-, and 150-W models)	S82Y-VM10F
Mounting Bracket D (bottom mounting for 300-W models)	S82Y-VM30B
Mounting Bracket E (horizontal bottom mounting for 300-W models)	S82Y-VM30S
Mounting Bracket F (front mounting for 300-W models)	S82Y-VM30F
Mounting Bracket G (DIN Rail mounting for 300-W models)	S82Y-VM30D
Mounting Bracket H (bottom mounting for 600-W models)	S82Y-VM60B
Mounting Bracket I (horizontal bottom mounting for 600-W models)	S82Y-VM60S
Mounting Bracket J (front mounting for 600-W models)	S82Y-VM60F
Mounting Bracket K (DIN Rail mounting for 600-W models)	S82Y-VM60D

Mounting Bracket A (Bottom Mounting for 15-, 30-, and 50-W Models)

S82Y-VM10B

a = Mounting holes for 15-W models
b = Mounting holes for 30-W models
c = Mounting holes for 50-W models

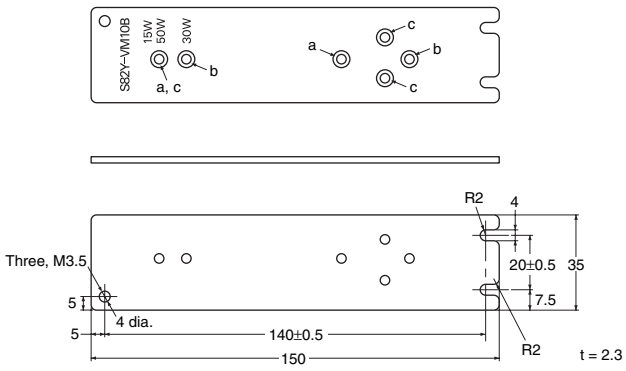

Using the Mounting Bracket

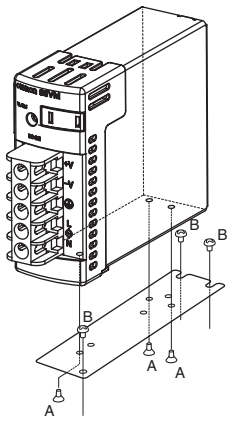

Screws Used
A: Accessories
(Use the supplied screws in two places for 15-W and 30-W models and in three places for 50-W models.)
B: M3 or M3.5
(three places)
Mounting screw tightening torque (recommended): 0.49 N·m

Mounting Bracket B (Bottom Mounting for 100-, and 150-W Models)

S82Y-VM20B

a = Mounting holes for 150-W models
b = Mounting holes for 100-W models

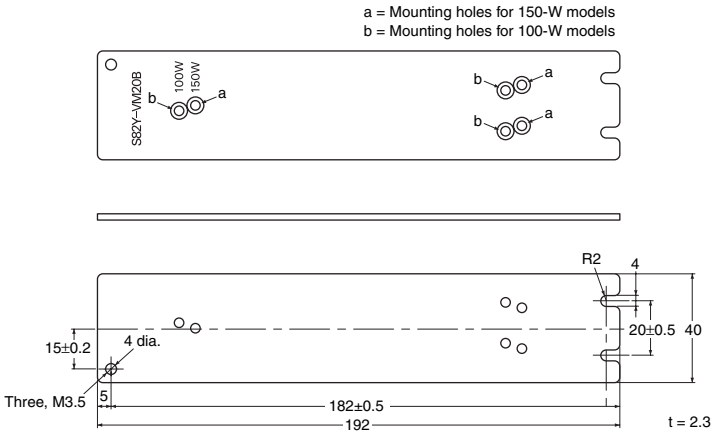

Using the Mounting Bracket

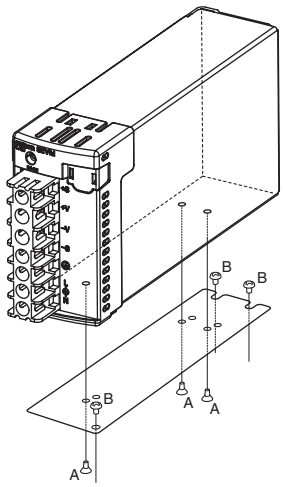

Screws Used
A: Accessories
(Use the supplied screws in three places.)
B: M3 or M3.5
(three places)
Mounting screw tightening torque (recommended): 0.49 N·m

Mounting Bracket C (Front Mounting for 15-, 30- 50-, 100-, and 150-W Models)

S82Y-VM10F

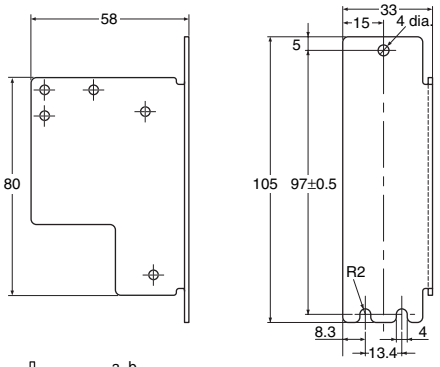

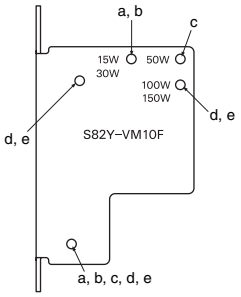

t = 1.6

a = Mounting holes for 15-W models
b = Mounting holes for 30-W models
c = Mounting holes for 50-W models
d = Mounting holes for 100-W models
e = Mounting holes for 150-W models

Using the Mounting Bracket

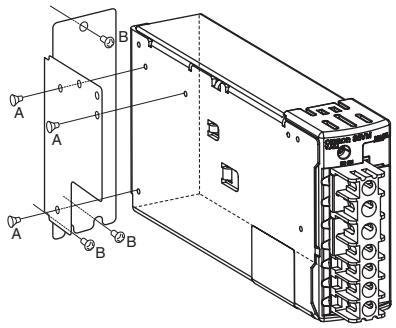

Screws Used
A: Accessories
(Use the supplied screws in two places for 15-W, 30-W and 50-W models and in three places for 100-W and 150-W models.)
B: M3 or M3.5
(three places)
Mounting screw tightening torque (recommended): 0.49 N·m

Mounting Bracket D (Bottom Mounting for 300-W Models)

S82Y-VM30B

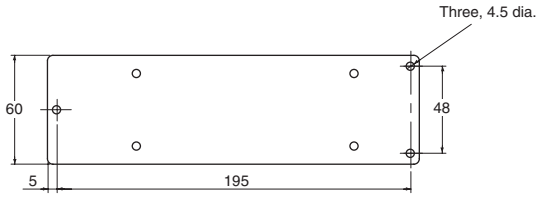

Using the Mounting Bracket

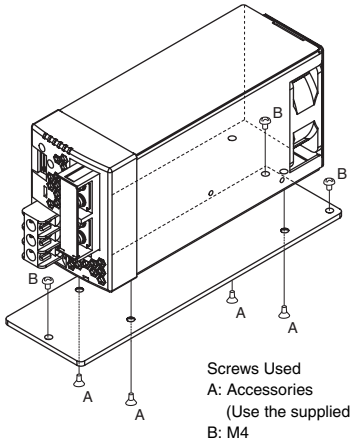

Screws Used
A: Accessories
(Use the supplied screws in four places.)
B: M4
(three places)
Mounting screw tightening torque (recommended): 1.27 N·m

Mounting Bracket E (Horizontal Bottom Mounting for 300-W Models)

S82Y-VM30S

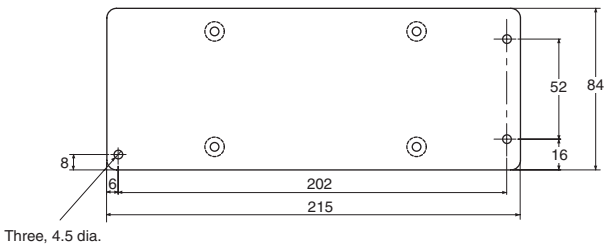

Using the Mounting Bracket

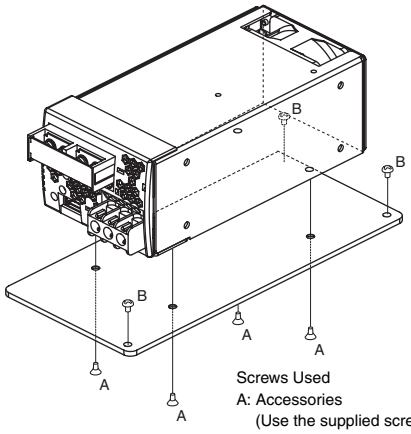

Screws Used
A: Accessories
(Use the supplied screws in four places.)
B: M4
(three places)
Mounting screw tightening torque (recommended): 1.27 N·m

Mounting Bracket F (Front Mounting for 300-W Models)

S82Y-VM30F

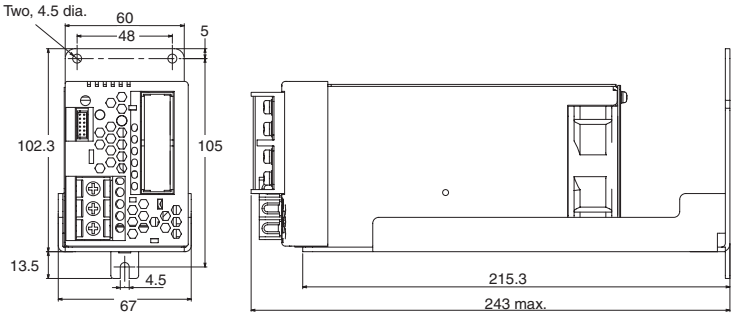

Using the Mounting Bracket

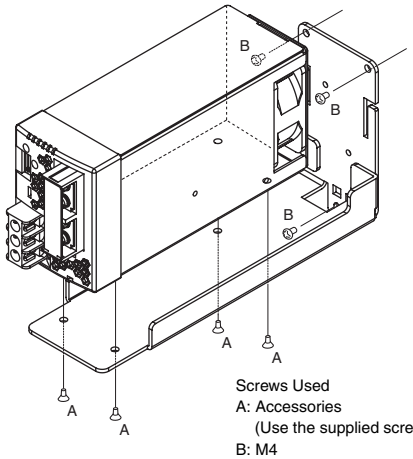

Screws Used
A: Accessories
(Use the supplied screws in four places.)
B: M4
(three places)
Mounting screw tightening torque (recommended): 1.27 N·m

Mounting Bracket G (DIN Rail Mounting for 300-W Models)

S82Y-VM30D

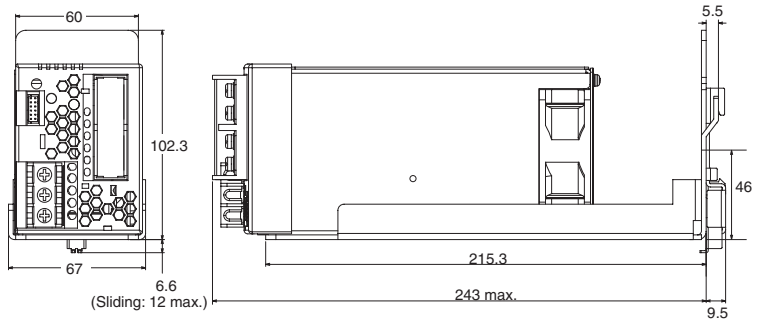

Note: Use a metal DIN Rail when mounting a 300-W model to a DIN Rail.

Using the Mounting Bracket

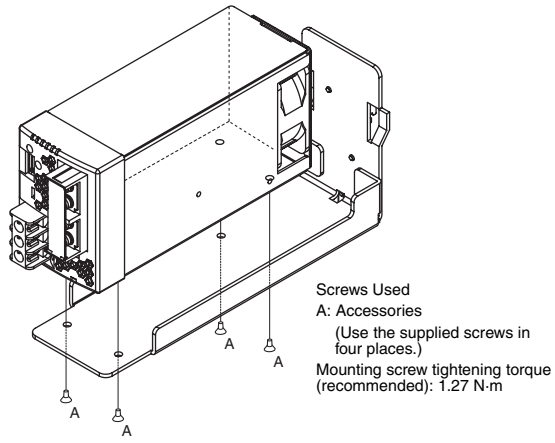

Screws Used
A: Accessories
(Use the supplied screws in four places.)
Mounting screw tightening torque (recommended): 1.27 N·m

Mounting Bracket H (Bottom Mounting for 600-W Models)

S82Y-VM60B

Using the Mounting Bracket

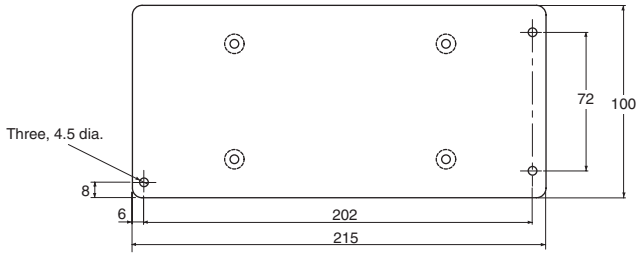

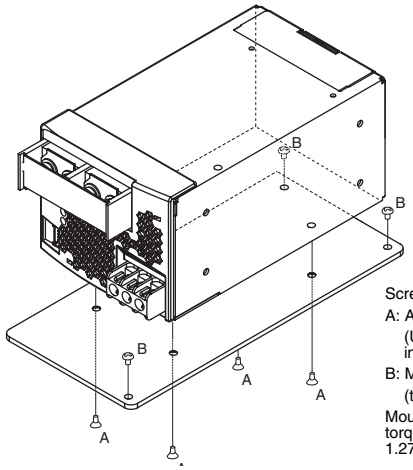

Screws Used
A: Accessories
(Use the supplied screws in four places.)
B: M4
(three places)
Mounting screw tightening torque (recommended): 1.27 N·m

Mounting Bracket I (Horizontal Bottom Mounting for 600-W Models)

S82Y-VM60S

Using the Mounting Bracket



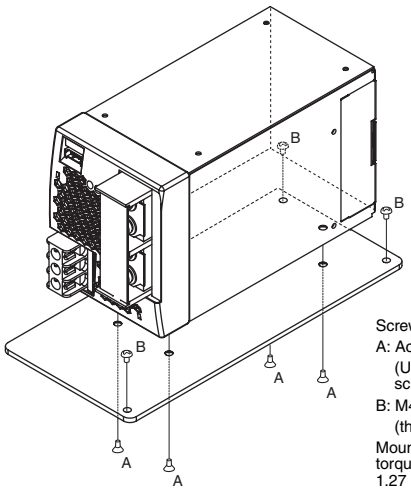

Screws Used
A: Accessories
(Use the supplied screws in four places.)
B: M4
(three places)
Mounting screw tightening torque (recommended): 1.27 N·m

Mounting Bracket J (Front Mounting for 600-W Models)

S82Y-VM60F

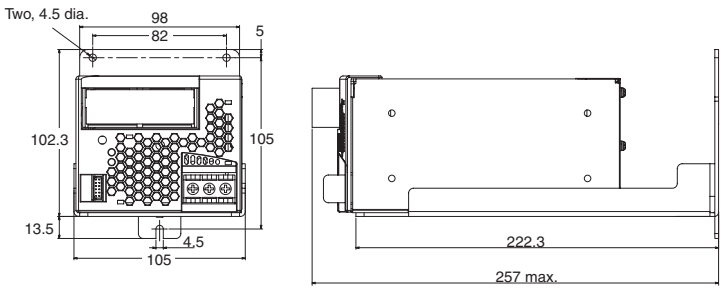

Using the Mounting Bracket

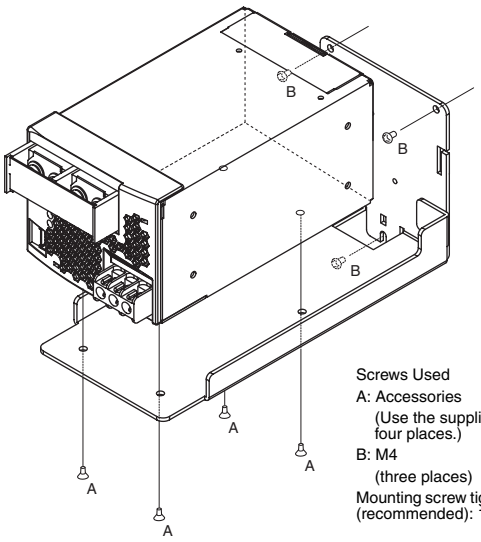

Screws Used
A: Accessories
(Use the supplied screws in four places.)
B: M4
(three places)
Mounting screw tightening torque (recommended): 1.27 N·m

Mounting Bracket K (DIN Rail Mounting for 600-W Models)

S82Y-VM60D

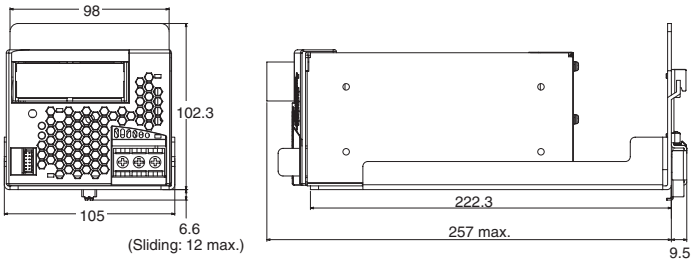

Note: Use a metal DIN Rail when mounting a 600-W model to a DIN Rail.

Using the Mounting Bracket

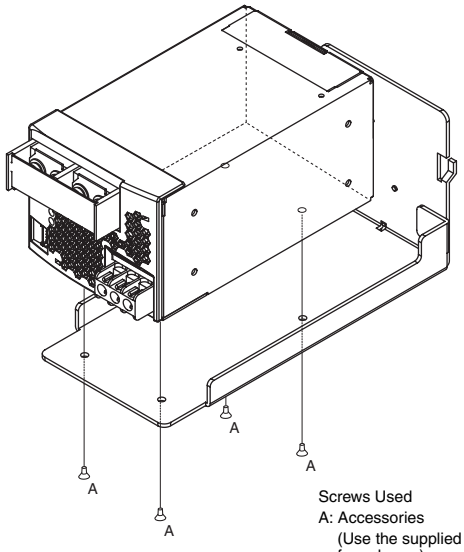

Screws Used
A: Accessories
(Use the supplied screws in four places.)
Mounting screw tightening torque (recommended): 1.27 N·m

■ Other Items Sold Separately

Name	Model
Undervoltage Alarm Output Wiring Cable	S82Y-VM10H
Signal I/O Connector Terminals and Housing Set contains ten SPHD-001T-P0.5 Terminals and one PHDR-12VS Housing.	S82Y-VM30C
Replacement Fan Unit for 300-W Models	S82Y-VM30FAN
Replacement Fan Unit for 600-W Models	S82Y-VM60FAN
Replacement Fan Unit for a 1,500-W Model	S82Y-VM15FAN

Undervoltage Alarm Output Wiring Cable

S82Y-VM10H (for S8VM-05024A□/05024P□/10024A□/10024P□/15024A□/15024P□ Only)

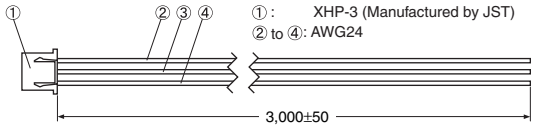

Using the Undervoltage Alarm Output Wiring Cable

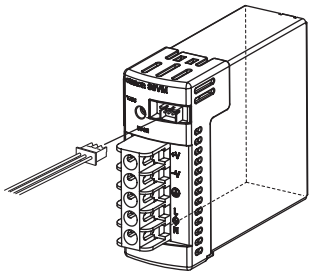

Note: The signal I/O connector can be connected in only one orientation. It cannot be connected if it is upside down.

■ Signal I/O Connector Terminals and Housing

S82Y-VM30C (for the S8VM-300□□C/600□□C/15224C)

The S82Y-VM30C is used to make a signal I/O connector. Refer to *Signal I/O Connector Harness Manufacture Method* on page 33 for details.

■ DIN Rail

Note: All units are in millimeters unless otherwise indicated.

Mounting Rail (Material: Aluminum)

PFP-100N
PFP-50N

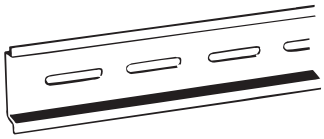

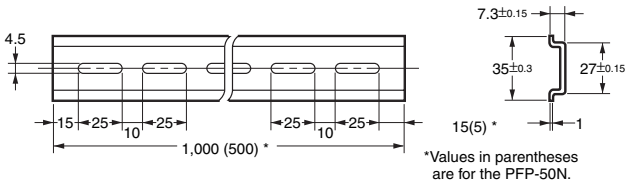

*Values in parentheses are for the PFP-50N.

Mounting Rail (Material: Aluminum)

PFP-100N2

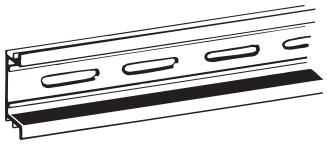

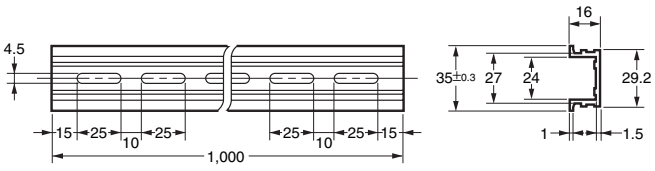

Mounting Rail (Order Separately)

End Plate
PFP-M

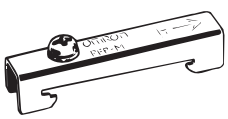

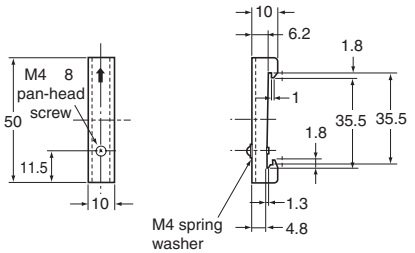

Note: If there is a possibility that the Unit will be subjected to vibration or impact, metallic filings may be generated by abrasion. In this situation, use a metal DIN Rail. Also, if the Unit may be subjected to sliding to either side, attach an End Plate (Model PFP-M) on each side of the Unit.

Safety Precautions

Refer to *Safety Precautions for All Power Supplies*.

⚠ CAUTION

Minor electric shock, fire, or Product failure may occasionally occur. Do not disassemble, modify, or repair the Product or touch the interior of the Product.	
Minor burns may occasionally occur. Do not touch the Product while power is being supplied or immediately after power is turned OFF.	
Fire may occasionally occur. Tighten terminal screws to the specified torque. 15-, 30-, 50-, 100-, and 150-W models (1.6 N·m) 300-, 600-, and 1,500-W models (M4; 1.6 N·m, M5; 2.50 N·m, M8 bolts and nuts; 10.8 N·m)	
Minor injury due to electric shock may occasionally occur. Do not touch the terminals while power is being supplied.	
Minor electric shock, fire, or Product failure may occasionally occur. Do not allow any pieces of metal or conductors or any clippings or cuttings resulting from installation work to enter the Product.	

■ Precautions for Safe Use

Mounting

Ensure sufficient heat dissipation when installing the Power Supply to increase its long-term reliability.

Use the metal plate as the mounting panel.

When cutting out holes for mounting, make sure that cuttings do not enter the interior of the Power Supply.

The amount of installation spacing required between Power Supplies depends on the capacity. Refer to the following table.

15/30/50/100/150-W Models

Natural cooling is used, so mount the Power Supply so that there is airflow around it.

Improper mounting will interfere with heat dissipation and may occasionally result in deterioration or damage of internal parts. Use the Power Supply within the derating curve for the mounting direction that is used.

The internal parts may possibly be damaged if mounting screws are over inserted. Refer to *Dimensions* on page 19 to 21 for maximum depth of insertion inside the Power Supply.

Standard Mounting (DIN Rail Mounting Bracket Models)

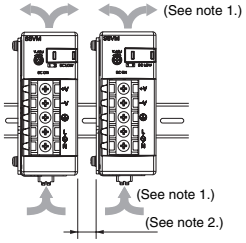

Standard Mounting (Bottom Mounting Models)

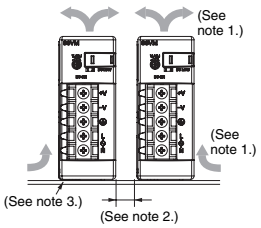

Horizontal Mounting

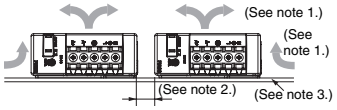

Face-up Mounting

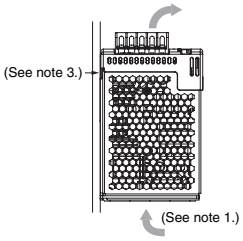

Note: 1. Convection of air

2.

Capacity	Dimensions
15 W	20 mm min.
30 W	
50 W	
100 W	50 mm min. (See note.)
150 W	

3. A metal plate is recommended as the mounting surface.

Note: If more than one S8VM-100□□□□/150□□□□ Power Supply is mounted together, install them as far away from sources of heat as possible. If only 20 mm of space is available on the right and left sides of a Power Supply (see note 2.), use the Power Supply at a load ratio of 80% or less.

300/600/1,500-W Models

A forced-air cooling method with a fan is used. To ensure sufficient cooling, do not cover the air holes located on the side the fan is mounted and the opposite side.

Improper mounting will interfere with heat dissipation and may occasionally result in deterioration or damage of internal parts. Do not use the Power Supply in any mounting direction other than those specified.

The internal parts may possibly be damaged if mounting screws are over inserted. The screws must not protrude more than 6 mm inside the Power Supply.

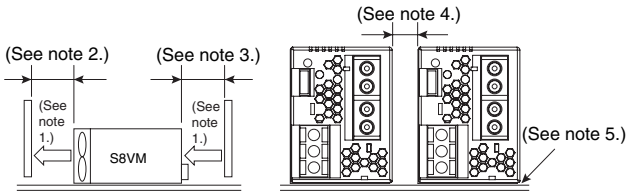

Note: 1. Convection of air
2. 50 mm or more
3. (S8VM-300□□C/600□□C): 50 mm or more
(S8VM-15224C): 100 mm or more
4. 20 mm or more
5. Use a metal plate as the mounting panel.

Wiring

Connect the ground completely. A protective earthing connection stipulated in safety standards is used. Electric shock or malfunction may occur if the ground is not connected completely.

Minor fire may possibly occur. Ensure that input and output terminals are wired correctly.

Do not apply more than 100-N force to the terminal block when tightening it.

Be sure to remove the sheet covering the Power Supply for machining before power-ON so that it does not interfere with heat dissipation.

Use the following material for the wires to be connected to the S8VM to prevent smoking or ignition caused by abnormal loads.
Over heating or fire can result from inadequately sized wiring materials when problems occur at the load. As a general rule, always select wire sizes suitable for at least 1.6 times the rated current.
Refer to the wiring manufacturer's recommended allowable current and voltage drop specifications for information when selecting wiring materials.

Recommended Wire Sizes

Terminal	Model		Recommended wire size
Input	S8VM-015□□□□ S8VM-030□□□□ S8VM-050□□□□ S8VM-100□□□□ S8VM-150□□□□	(M3.5)	AWG24 to AWG14 (0.205 to 2.081 mm^2)
	S8VM-300□□C S8VM-600□□C S8VM-15224C	(M4)	AWG20 to AWG10 (0.52 to 5.27 mm^2)
Output	S8VM-015□□□□ S8VM-030□□□ S8VM-050□□□□	(M3.5)	AWG24 to AWG14 (0.205 to 2.081 mm^2)
	S8VM-100□□□□ S8VM-150□□□□	(M4)	AWG24 to AWG12 (0.205 to 3.309 mm^2)
	S8VM-30005/12C/15C	(M4)	AWG16 to AWG10 (1.32 to 5.27 mm^2)
	S8VM-30024C	(M4)	Twisted wires AWG18 (0.81 mm^2)
	S8VM-60005C/12C/15C	(M5)	AWG14 to AWG8 (2.08 to 8.3 mm^2)
	S8VM-60024C	(M5)	Twisted wires AWG14 (2.08 mm^2)
	S8VM-15224C	(M8 bolts and nuts)	AWG8 to AWG4 (8.3 to 21.09 mm^2)

The current rating for the output terminals on the S8VM-300□□C is 40 A per terminal. The current rating for the output terminals on the S8VM-600□□C is 60 A per terminal. Use two terminals together if a current exceeding the terminal rating is used.

Use min. 60°C or 60/75°C wire.

Use copper conductors only.

Undervoltage Alarm Output Connector Harness Manufacture Method

The following products are provided with the S8VM-05024A□/P□, S8VM-10024A□/P□ and S8VM-15024A□/P□ for the undervoltage alarm transistor output wiring.

Connector	S8VM-05024A□/P□	S8VM-10024A□/P□	Manufactured by JST
		S8VM-15024A□/P□	
	S3B-XH-A-1	BH3B-XH-2	
Housing (provided)	XHP-3		
Terminal (provided)	BXH-001T-P0.6 or SXH-001T-P0.6		

Be sure to prepare the connector according to the following instructions to ensure correct wiring. For details, refer to the JST catalog.

- Use a wire size of AWG28 to AWG22.
- The guideline for the length of sheath to be stripped from the wire is 2.1 to 2.6 mm.
- Use either a YC or YRS Crimping Tool (manufactured by JST) to crimp the terminal and wire.
- Be sure to insert the crimped terminal wires into the housing fully until a click is heard. Also, make sure that the wires attached to the housing are securely locked in place.

Signal I/O Connector Harness Manufacture Method

The S8VM-300□□C/600□□C/15224C are using PHD connector (manufactured by JST).

Connector	S8VM-300□□C/600□□C/15224C	Manufactured by JST
	S12B-PHDSS	
Housing	PHDR-12VS	
Terminal	SPHD-001T-P0.5 or BPHD-001T-P0.5	

Be sure to prepare the connector according to the following instructions to ensure correct wiring. For details, refer to the JST catalog.

- Use a wire size of AWG26 to AWG22.
- The guideline for the length of sheath to be stripped from the wire is 2.3 mm.
- Use a YC Crimping Tool (manufactured by JST) to crimp the terminal and wire.
- Applicable wire per barrel size is UL1007 (standard wire) and its equivalent standard wire can be used. Use UL1061 or its equivalent standard wire for AWG22 wires, because the wire insulation outer diameter of UL1061 is small.
- Be sure to insert the crimped terminal wires into the housing fully until a click is heard. Also, make sure that the wires attached to the housing are securely locked in place.

Installation Environment

Do not use the Power Supply in locations subject to shocks or vibrations. In particular, install the Power Supply as far away as possible from contactors or other devices that are a vibration source.

Install the Power Supply well away from any sources of strong, high-frequency noise and surge.

Operating Life

The life of a Power Supply is determined by the life of the electrolytic capacitors used inside. Here, Arrhenius Law applies, i.e., the life will be halved for each rise of 10°C or the life will be doubled for each drop of 10°C. The life of the Power Supply can thus be increased by reducing its internal temperature.

Ambient Operating and Storage Environments

Store the Power Supply at a temperature of –25 to 65°C and a humidity of 25% to 90%.

The Internal parts may occasionally be deteriorated or damaged. Do not use the Power Supply outside the derating range (i.e., under conditions indicated by the shaded area ( ) in the derating curve diagrams on pages 9 and 15.)

Use the Power Supply at a humidity of 30% to 85%.

Do not use the Power Supply in locations subject to direct sunlight.

Do not use the Power Supply in locations where liquids, foreign matter, or corrosive gases may enter the interior of the Power Supply.

Overload Protection

If the Power Supply has been short-circuited or supplied with an overcurrent for longer than 30 seconds, the internal parts of the Power Supply may occasionally be deteriorated or damaged.

Internal parts may possibly be deteriorated or damaged if the Power Supply is used for applications with frequent inrush current or overloading at the load end. Do not use the Power Supply for such applications.

Dielectric Strength Test

If a high voltage is applied between an input and the case (PE/FG), it will pass though the LC of the built-in noise filter and energy will be stored. If the high voltages used for dielectric strength testing are turned ON and OFF with a switch, timer, or similar device, impulse voltage will be generated when the voltage is turned OFF and internal parts may possibly be damaged. To prevent the generation of impulse voltages, reduce the applied voltage slowly with a variable resistor on the test device or turn the voltage ON and OFF at the zero-cross point.

When performing the test, be sure to short-circuit all the output terminals to protect them from damage.

Check the waveform of the applied voltage while testing. High voltage due to distortions of the applied voltage may be produced depending on the type of testing equipment.

Insulation Test

When performing the test, be sure to short-circuit all the output terminals to protect them from damage.

Inrush Current

When two or more Power Supplies are connected to the same input, inrush current is added to the total current. Select fuses and circuit breakers giving sufficient consideration to the fusing or operating characteristics so that fuses will not burn and breakers will not break due to inrush current.

Output Voltage Adjuster (V.ADJ)

Default Setting: Set at the rated voltage

Adjustable Range: Adjustable with output voltage adjuster (V.ADJ) on the front panel of the Power Supply from –20% to 20% of the rated output voltage (–10% to 20% of the rated voltage for S8VM-□□□24A□/P□). Turning clockwise increases the output voltage and turning counterclockwise decreases the output voltage.

The output voltage adjuster (V.ADJ) may possibly be damaged if it is turned with unnecessary force. Do not turn the adjuster with excessive force.

After completing output voltage adjustment, be sure that the output capacity or output current does not exceed the rated output capacity or rated output current.

The output voltage may increase beyond the allowable voltage range (up to +20% of the rated voltage) depending on the operation of the output voltage adjuster (V.ADJ). When adjusting the output voltage, check the output voltage of the Power Supply and be sure that the load is not damaged.

When increasing the output voltage to more than +20% of the rated value using the output voltage adjuster (V. ADJ), the overvoltage protection function may operate.

(S8VM-□□□24A□/P□ Only)

Turn the output voltage adjuster (V.ADJ) slowly. When decreasing the output voltage quickly, or when adjusting the output voltage to less than –10% of the rated value, the undervoltage alarm function may operate.

Ripple

(S8VM-15224C Only)

The rated ripple noise voltage was measured using a measuring circuit that conforms to the JEITA standard RC-9131A.

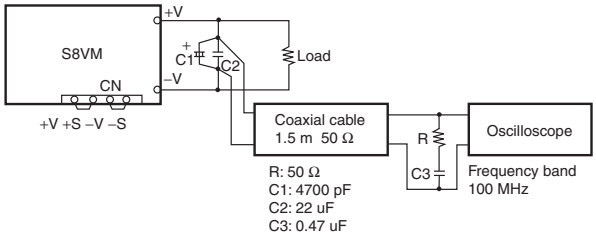

Dielectric Strength

When testing the dielectric strength, some testing devices will apply a much higher voltage than expected. Always check the applied waveform before testing the dielectric strength.

Remote Sensing Function

100/150-W Models

If the +S and –S terminals are opened by removing the short bar, the overvoltage protection function will be activated and the output voltage will be cut off.

300/600/1,500-W Models

The stability and accuracy of the output will deteriorate if the +S and – S pins are open. Always connect the +S and –S pins.

Series Operation

Two Power Supplies can be connected in series.
The (±) voltage output can be accomplished with two Power Supplies.

Series Operation

15W/30W
Correct

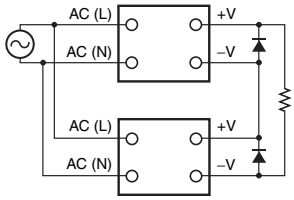

50W/100W/150W/300W/600W/ 1,500W
Correct

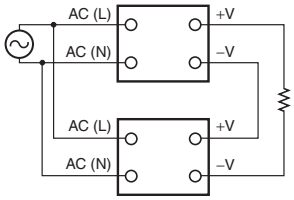

Output Voltage (±)

15W/30W
Correct

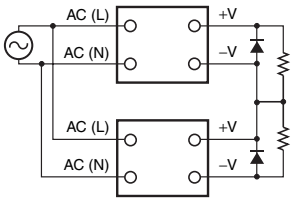

50W/100W/150W/300W/600W/ 1,500W
Correct

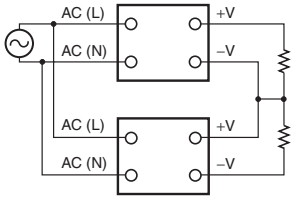

Note: 1. If the load is short-circuited, a reverse voltage may be applied inside the Power Supply unit, and this may possibly cause the deterioration or damage of the Power Supply unit. Connect the diode as shown in the figures. Use the following guidelines to select the diode to be connected.

Type	Schottky Barrier diode
Dielectric strength (V_{RRM})	Twice the rated output voltage or above
Forward current (I_F)	Twice the rated output current or above

2. Though Power Supplies having different specifications can be connected in series, the current flowing through the load must not exceed the smaller rated output current.

Parallel Operation

15/30/50/100/150-W Models

The Power Supply is not designed for parallel operation.

Incorrect

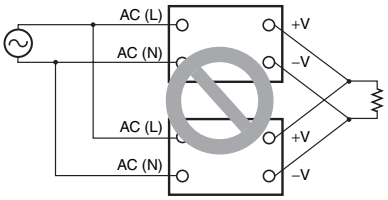

300/600/1,500-W Models

If the CB pin (pin 5 on CN) and the CBG pin (pin 6 on CN) are connected, the current balance function will operate and parallel operation will be possible at 80% or less of the total output capacity.

Up to 2 Power Supplies can be connected.

Correct

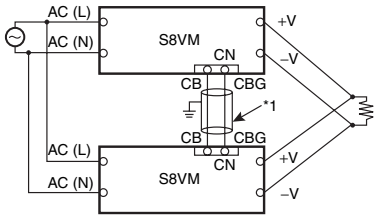

Use 2-conductor shielded cable as connection wire (* 1).

Adjust the output voltage of each Power Supply to the same value within 1% of the rated voltage or so that the difference in the output voltage is 100 mV or less, whichever is smaller, using the output voltage adjuster (V. ADJ).

Parallel operation is used to increase static capacity. The output voltage may drop with sudden load fluctuations.

There may be steps in the rising waveform of the output voltage during parallel operation.

Remove the standard supplied connector and prepare a connector harness separately.

In Case There Is No Output Voltage

15/30/50/100/150-W Models

The possible cause for no output voltage may be that the overload protection or overvoltage protection has operated. The internal protection circuit may operate if a large amount of surge voltage such as a lightening surge is applied to the input.

If there is no output voltage even after checking the following points please contact your OMRON representative.

Check the overload protected status.

Check whether the load is in overload status or is short-circuited. Remove the load wires when checking.

Attempt to clear the overvoltage or internal protection function.

Turn OFF the input power once and leave it OFF for at least 3 minutes. Then turn it ON again to see if this clears the condition.

Check whether the +S terminal and –S terminal are open, i.e., if the short bar has been removed. (S8VM-100□□□□/S8VM-150□□□□ only)

Check if the output voltage has been adjusted to more than +20% of the rated voltage using the output voltage adjuster (V. ADJ).

300/600/1,500-W Models

The possible cause for no output voltage may be that the overcurrent protection, overvoltage protection, or overheat protection has operated. Alternatively, the built-in fan may have stopped or the remote control function may be OFF.

If there is no output voltage even after checking the following five points, please contact your OMRON representative.

Check the overload protected status.

Check whether the load is in overload status or is short-circuited. Remove the load wires when checking.

Attempt to clear the overvoltage protection function.

Turn OFF the input power once and leave it OFF for at least 3 minutes. Then turn it ON again to see if this clears the condition.

Check whether the +S terminal and –S terminal are open.

Check if the output voltage has been adjusted to more than +20% of the rated voltage using the output voltage adjuster (V. ADJ).

Check the overheat protected status.

Turn OFF the input power and leave it OFF until the Power Supply cools sufficiently. Turn it ON again to see if this clears the condition.

Check if the built-in fan motor has stopped.

Check if the built-in fan motor has stopped. The fan is a consumable part.

Check the remote control function.

Check if the +RC and -RC pins are open. Make the correct connections as specified.

Fan Replacement

300/600/1,500-W Models

Consult with OMRON regarding fan replacement. OMRON will replace fans for a fee. A replacement Fan Unit (S82Y-VM□□FAN) is available. Use the curve in the graph below as a rough measure of replacement timing.

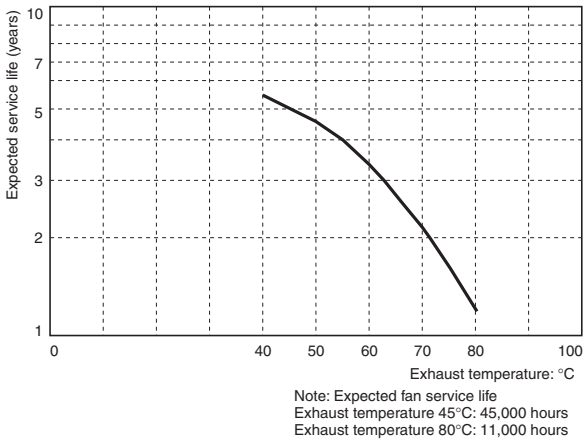

Note: Expected fan service life
Exhaust temperature 45°C: 45,000 hours
Exhaust temperature 80°C: 11,000 hours

The Power Supply will not conform to safety standards if the customer replaces the fan.

Buzzing Noise when the Input Is Turned ON

50/100/150/300/600/1,500-W Models

A harmonic current suppression circuit is built into the input power. This circuit can create noise when the input is turned ON, but it will last only until internal operation stabilizes and does not indicate any problem in the Power Supply.

DIN Rail Mounting

15/30/50/100/150/300/600-W Models

When mounting to a DIN Rail, lower the S8VM onto the Rail until the Rail stopper clicks into place, hook section A over the edge of the Rail and push in the direction of B.

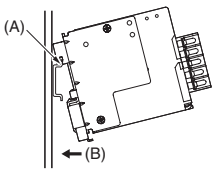

To remove the S8VM from the DIN Rail, insert a screwdriver into section C and pull the S8VM away from the Rail.

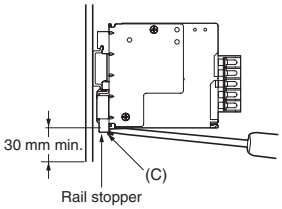

ALL DIMENSIONS SHOWN ARE IN MILLIMETERS.
To convert millimeters into inches, multiply by 0.03937. To convert grams into ounces, multiply by 0.03527.

In the interest of product improvement, specifications are subject to change without notice.

Terms and Conditions of Sale

1. Offer; Acceptance. These terms and conditions (these "Terms") are deemed part of all quotes, agreements, purchase orders, acknowledgments, price lists, catalogs, manuals, brochures and other documents, whether electronic or in writing, relating to the sale of products or services (collectively, the "Products") by Omron Electronics LLC and its subsidiary companies ("Omron"). Omron objects to any terms or conditions proposed in Buyer's purchase order or other documents which are inconsistent with, or in addition to, these Terms.
2. Prices; Payment Terms. All prices stated are current, subject to change without notice by Omron. Omron reserves the right to increase or decrease prices on any unshipped portions of outstanding orders. Payments for Products are due net 30 days unless otherwise stated in the invoice.
3. Discounts. Cash discounts, if any, will apply only on the net amount of invoices sent to Buyer after deducting transportation charges, taxes and duties, and will be allowed only if (i) the invoice is paid according to Omron's payment terms and (ii) Buyer has no past due amounts.
4. Interest. Omron, at its option, may charge Buyer 1-1/2% interest per month or the maximum legal rate, whichever is less, on any balance not paid within the stated terms.
5. Orders. Omron will accept no order less than $200 net billing.
6. Governmental Approvals. Buyer shall be responsible for, and shall bear all costs involved in, obtaining any government approvals required for the importation or sale of the Products.
7. Taxes. All taxes, duties and other governmental charges (other than general real property and income taxes), including any interest or penalties thereon, imposed directly or indirectly on Omron or required to be collected directly or indirectly by Omron for the manufacture, production, sale, delivery, importation, consumption or use of the Products sold hereunder (including customs duties and sales, excise, use, turnover and license taxes) shall be charged to and remitted by Buyer to Omron.
8. Financial. If the financial position of Buyer at any time becomes unsatisfactory to Omron, Omron reserves the right to stop shipments or require satisfactory security or payment in advance. If Buyer fails to make payment or otherwise comply with these Terms or any related agreement, Omron may (without liability and in addition to other remedies) cancel any unshipped portion of Products sold hereunder and stop any Products in transit until Buyer pays all amounts, including amounts payable hereunder, whether or not then due, which are owing to it by Buyer. Buyer shall in any event remain liable for all unpaid accounts.
9. Cancellation; Etc. Orders are not subject to rescheduling or cancellation unless Buyer indemnifies Omron against all related costs or expenses.
10. Force Majeure. Omron shall not be liable for any delay or failure in delivery resulting from causes beyond its control, including earthquakes, fires, floods, strikes or other labor disputes, shortage of labor or materials, accidents to machinery, acts of sabotage, riots, delay in or lack of transportation or the requirements of any government authority.
11. Shipping; Delivery. Unless otherwise expressly agreed in writing by Omron:
    a. Shipments shall be by a carrier selected by Omron; Omron will not drop ship except in "break down" situations.
    b. Such carrier shall act as the agent of Buyer and delivery to such carrier shall constitute delivery to Buyer;
    c. All sales and shipments of Products shall be FOB shipping point (unless otherwise stated in writing by Omron), at which point title and risk of loss shall pass from Omron to Buyer; provided that Omron shall retain a security interest in the Products until the full purchase price is paid;
    d. Delivery and shipping dates are estimates only; and
    e. Omron will package Products as it deems proper for protection against normal handling and extra charges apply to special conditions.
12. Claims. Any claim by Buyer against Omron for shortage or damage to the Products occurring before delivery to the carrier must be presented in writing to Omron within 30 days of receipt of shipment and include the original transportation bill signed by the carrier noting that the carrier received the Products from Omron in the condition claimed.
13. Warranties. (a) Exclusive Warranty. Omron's exclusive warranty is that the Products will be free from defects in materials and workmanship for a period of twelve months from the date of sale by Omron (or such other period expressed in writing by Omron). Omron disclaims all other warranties, express or implied. (b) Limitations. OMRON MAKES NO WARRANTY OR REPRESENTATION, EXPRESS OR IMPLIED, ABOUT NON-INFRINGEMENT, MERCHANTABILITY OR FITNESS FOR A PARTICULAR PURPOSE OF THE PRODUCTS. BUYER ACKNOWLEDGES THAT IT ALONE HAS DETERMINED THAT THE PRODUCTS WILL SUITABLY MEET THE REQUIREMENTS OF THEIR INTENDED USE. Omron further disclaims all warranties and responsibility of any type for claims or expenses based on infringement by the Products or otherwise of any intellectual property right. (c) Buyer Remedy. Omron's sole obligation hereunder shall be, at Omron's election, to (i) replace (in the form originally shipped with Buyer responsible for labor charges for removal or replacement thereof) the non-complying Product, (ii) repair the non-complying Product, or (iii) repay or credit Buyer an amount equal to the purchase price of the non-complying Product; provided that in no event shall Omron be responsible for warranty, repair, indemnity or any other claims or expenses regarding the Products unless Omron's analysis confirms that the Products were properly handled, stored, installed and maintained and not subject to contamination, abuse, misuse or inappropriate modification. Return of any Products by Buyer must be approved in writing by Omron before shipment. Omron Companies shall not be liable for the suitability or unsuitability or the results from the use of Products in combination with any electrical or electronic components, circuits, system assemblies or any other materials or substances or environments. Any advice, recommendations or information given orally or in writing, are not to be construed as an amendment or addition to the above warranty. See http://www.omron247.com or contact your Omron representative for published information.
14. Limitation on Liability; Etc. OMRON COMPANIES SHALL NOT BE LIABLE FOR SPECIAL, INDIRECT, INCIDENTAL, OR CONSEQUENTIAL DAMAGES, LOSS OF PROFITS OR PRODUCTION OR COMMERCIAL LOSS IN ANY WAY CONNECTED WITH THE PRODUCTS, WHETHER SUCH CLAIM IS BASED IN CONTRACT, WARRANTY, NEGLIGENCE OR STRICT LIABILITY. Further, in no event shall liability of Omron Companies exceed the individual price of the Product on which liability is asserted.
15. Indemnities. Buyer shall indemnify and hold harmless Omron Companies and their employees from and against all liabilities, losses, claims, costs and expenses (including attorney's fees and expenses) related to any claim, investigation, litigation or proceeding (whether or not Omron is a party) which arises or is alleged to arise from Buyer's acts or omissions under these Terms or in any way with respect to the Products. Without limiting the foregoing, Buyer (at its own expense) shall indemnify and hold harmless Omron and defend or settle any action brought against such Companies to the extent based on a claim that any Product made to Buyer specifications infringed intellectual property rights of another party.
16. Property; Confidentiality. Any intellectual property in the Products is the exclusive property of Omron Companies and Buyer shall not attempt to duplicate it in any way without the written permission of Omron. Notwithstanding any charges to Buyer for engineering or tooling, all engineering and tooling shall remain the exclusive property of Omron. All information and materials supplied by Omron to Buyer relating to the Products are confidential and proprietary, and Buyer shall limit distribution thereof to its trusted employees and strictly prevent disclosure to any third party.
17. Export Controls. Buyer shall comply with all applicable laws, regulations and licenses regarding (i) export of products or information; (iii) sale of products to "forbidden" or other proscribed persons; and (ii) disclosure to non-citizens of regulated technology or information.
18. Miscellaneous. (a) Waiver. No failure or delay by Omron in exercising any right and no course of dealing between Buyer and Omron shall operate as a waiver of rights by Omron. (b) Assignment. Buyer may not assign its rights hereunder without Omron's written consent. (c) Law. These Terms are governed by the law of the jurisdiction of the home office of the Omron company from which Buyer is purchasing the Products (without regard to conflict of law principles). (d) Amendment. These Terms constitute the entire agreement between Buyer and Omron relating to the Products, and no provision may be changed or waived unless in writing signed by the parties. (e) Severability. If any provision hereof is rendered ineffective or invalid, such provision shall not invalidate any other provision. (f) Setoff. Buyer shall have no right to set off any amounts against the amount owing in respect of this invoice. (g) Definitions. As used herein, "including" means "including without limitation"; and "Omron Companies" (or similar words) mean Omron Corporation and any direct or indirect subsidiary or affiliate thereof.

Certain Precautions on Specifications and Use

1. Suitability of Use. Omron Companies shall not be responsible for conformity with any standards, codes or regulations which apply to the combination of the Product in the Buyer's application or use of the Product. At Buyer's request, Omron will provide applicable third party certification documents identifying ratings and limitations of use which apply to the Product. This information by itself is not sufficient for a complete determination of the suitability of the Product in combination with the end product, machine, system, or other application or use. Buyer shall be solely responsible for determining appropriateness of the particular Product with respect to Buyer's application, product or system. Buyer shall take application responsibility in all cases but the following is a non-exhaustive list of applications for which particular attention must be given:
   (i) Outdoor use, uses involving potential chemical contamination or electrical interference, or conditions or uses not described in this document.
   (ii) Use in consumer products or any use in significant quantities.
   (iii) Energy control systems, combustion systems, railroad systems, aviation systems, medical equipment, amusement machines, vehicles, safety equipment, and installations subject to separate industry or government regulations.
   (iv) Systems, machines and equipment that could present a risk to life or property. Please know and observe all prohibitions of use applicable to this Product.
   NEVER USE THE PRODUCT FOR AN APPLICATION INVOLVING SERIOUS RISK TO LIFE OR PROPERTY OR IN LARGE QUANTITIES WITHOUT ENSURING THAT THE SYSTEM AS A WHOLE HAS BEEN DESIGNED TO ADDRESS THE RISKS, AND THAT THE OMRON'S PRODUCT IS PROPERLY RATED AND INSTALLED FOR THE INTENDED USE WITHIN THE OVERALL EQUIPMENT OR SYSTEM.
2. Programmable Products. Omron Companies shall not be responsible for the user's programming of a programmable Product, or any consequence thereof.
3. Performance Data. Data presented in Omron Company websites, catalogs and other materials is provided as a guide for the user in determining suitability and does not constitute a warranty. It may represent the result of Omron's test conditions, and the user must correlate it to actual application requirements. Actual performance is subject to the Omron's Warranty and Limitations of Liability.
4. Change in Specifications. Product specifications and accessories may be changed at any time based on improvements and other reasons. It is our practice to change part numbers when published ratings or features are changed, or when significant construction changes are made. However, some specifications of the Product may be changed without any notice. When in doubt, special part numbers may be assigned to fix or establish key specifications for your application. Please consult with your Omron's representative at any time to confirm actual specifications of purchased Product.
5. Errors and Omissions. Information presented by Omron Companies has been checked and is believed to be accurate; however, no responsibility is assumed for clerical, typographical or proofreading errors or omissions.

OMRON
AUTOMATION & SAFETY

OMRON INDUSTRIAL AUTOMATION • THE AMERICAS HEADQUARTERS
Schaumburg, IL USA • 847.843.7900 • 800.556.6766 • www.omron247.com

OMRON CANADA, INC. • HEAD OFFICE
Toronto, ON, Canada • 416.286.6465 • 866.986.6766 • www.omron247.com

OMRON ELECTRONICS DE MEXICO • HEAD OFFICE
México DF • 52.55.59.01.43.00 • 001.800.556.6766 • mela@omron.com

OMRON ELECTRONICS DE MEXICO • SALES OFFICE
Apodaca, N.L. • 52.81.11.56.99.20 • 001.800.556.6766 • mela@omron.com

OMRON ELETRÔNICA DO BRASIL LTDA • HEAD OFFICE
São Paulo, SP, Brasil • 55.11.2101.6300 • www.omron.com.br

OMRON ARGENTINA • SALES OFFICE
Cono Sur • 54.11.4783.5300

OMRON CHILE • SALES OFFICE
Santiago • 56.9.9917.3920

OTHER OMRON LATIN AMERICA SALES
54.11.4783.5300

OMRON EUROPE B.V. • Wegalaan 67-69, NL-2132 JD, Hoofddorp, The Netherlands. • Tel: +31 (0) 23 568 13 00
Fax: +31 (0) 23 568 13 88 • www.industrial.omron.eu

Cat. No. CSM-S8VM-DS-E-12-1 12/11 Note: Specifications are subject to change. © 2012 Omron Electronics LLC Printed in U.S.A.