CCD area image sensor
S8658-01

Front-illuminated FFT-CCD for X-ray imaging

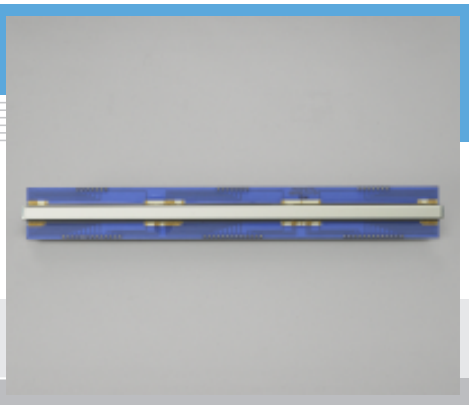

S8658-01 is a FFT-CCD area image sensor specifically developed for X-ray imaging. Since a FOS (Fiber Optic plate with Scintillator) to convert X-rays into visible light is mounted on the CCD chip, X-ray images can be captured in fine detail. Three CCD chips are linearly arranged in close proximity to form a long and narrow sensor format. Effective size of each active area is 73.728 (H) × 6.144 (V) mm^2, so the overall active area length of the three chips is up to 220 mm in length. Each CCD chip has 1536 × 128 pixels and the pixel size is 48 × 48 µm.
When used in TDI operation mode which is a special feature of this CCD image sensor, even X-ray images of a moving object can be clearly acquired, making S8658-01 ideal for non-destructive inspection of products carried on a belt conveyor, etc.

Features

- FFT-CCD coupled with FOS for X-ray imaging
- 1536 (H) × 128 (V) pixel format
- Pixel size: 48 × 48 µm
- Slit-like image of 220 mm long by aligning 3 CCD chips together
- Coupled with FOS for X-ray imaging
- TDI (Time Delay Integration) operation
- 100 % fill factor
- Wide dynamic range
- Low dark current
- MPP operation

Applications

- General X-ray imaging
- Non-destructive inspection
- Dental panorama, cephalo

■ Selection guide

Type No.	Cooling	Number of total pixels	Number of active pixels	Active area [mm (H) × mm(V)]
S8658-01	Non-cooled	1536 × 128	1536 × 128	73.728 × 6.144

Note) As an input window, FOS is suited to S8658-01.

■ General ratings

Parameter	Specification
CCD structure	Full frame transfer or TDI
X-ray sensitive area	220 × 6 mm
Fill factor	100 %
Number of active pixels	1536 (H) × 128 (V) *1
Pixel size	48 (H) × 48 (V) µm
CCD active area	73.728 (H) × 6.144 (V) mm *1
Vertical clock phase	2 phase and 2 line
Horizontal clock phase	2 phase and 2 line
Output circuit	Two-stage MOSFET source follower with load resistance
X-ray resolution	4 to 6 Lp/mm at 60 kVp, 20 µGy
Total dose irradiation	50 Gy max.
Package	60 pin ceramic package
Window	FOS (Fiber Optic plate with Scintillator)

*1: Number of active pixels per chip. Three chips are used.

SOLID STATE DIVISION

■ Absolute maximum ratings (Ta=25 °C)

Parameter	Symbol	Min.	Typ.	Max.	Unit
Storage temperature	Tstg	-20	-	+70	°C
Operating temperature	Topr	0	-	+40	°C
OD voltage	V_{OD}	-0.5	-	+20	V
RD voltage	V_{RD}	-0.5	-	+18	V
ISV voltage	V_{ISV}	-0.5	-	+18	V
IGV voltage	V_{IGV}	-15	-	+15	V
IGH voltage	V_{IGH}	-15	-	+15	V
SG voltage	V_{SG}	-15	-	+15	V
OG voltage	V_{OG}	-15	-	+15	V
RG voltage	V_{RG}	-15	-	+15	V
TG voltage	V_{TG}	-15	-	+15	V
Vertical clock voltage	V_{P1AV}, V_{P2AV} V_{P1BV}, V_{P2BV}	-15	-	+15	V
Horizontal clock voltage	V_{P1AH}, V_{P2AH} V_{P1BH}, V_{P2BH}	-15	-	+15	V

■ Operating conditions (MPP mode, Ta=25 °C)

Parameter			Symbol	Min.	Typ.	Max.	Unit
Output transistor drain voltage			V_{OD}	12	15	18	V
Reset drain voltage			V_{RD}	12	13	14	V
Output gate voltage			V_{OG}	-0.5	2	5	V
Output transistor ground voltage			V_{SSA}	-	0	-	V
Substrate voltage			V_{SSD}	-5	0	-	V
Test point	Vertical input source		V_{ISV}	-	V_{RD}	-	V
	Vertical input gate		V_{IGV}	-8	0	-	
	Horizontal input gate		V_{IGH}	-8	0	-	
Vertical shift register clock voltage		High	V_{P1AVH}, V_{P2AVH} V_{P1BVH}, V_{P2BVH}	0	3	6	V
		Low	V_{P1AVL}, V_{P2AVL} V_{P1BVL}, V_{P2BVL}	-9	-8	-7	
Horizontal shift register clock voltage		High	V_{P1AHH}, V_{P2AHH} V_{P1BHH}, V_{P2BHH}	0	3	6	V
		Low	V_{P1AHL}, V_{P2AHL} V_{P1BHL}, V_{P2BHL}	-9	-8	-7	
Summing gate voltage		High	V_{SGH}	0	3	6	V
		Low	V_{SGL}	-9	-8	-7	
Reset gate voltage		High	V_{RGH}	0	3	6	V
		Low	V_{RGL}	-9	-8	-7	
Transfer gate voltage		High	V_{TGH}	0	3	6	V
		Low	V_{TGL}	-9	-8	-7	

■ Electrical characteristics (Ta=25 °C)

Parameter	Symbol	Remark	Min.	Typ.	Max.	Unit
Signal output frequency	fc		-	2	4	MHz
Reset clock frequency	frg		-	2	4	MHz
Vertical shift register capacitance	C_{P1AV}, C_{P2AV} C_{P1BV}, C_{P2BV}		-	15000	-	pF
Horizontal shift register capacitance	C_{P1AH}, C_{P2AH} C_{P1BH}, C_{P2BH}		-	500	-	pF
Summing gate capacitance	C_{SG}		-	15	-	pF
Reset gate capacitance	C_{RG}		-	10	-	pF
Transfer gate capacitance	C_{TG}		-	500	-	pF
Transfer efficiency	CTE	*2	0.99995	0.99999	-	
DC output level	Vout	*3	5	8	11	V
Output impedance	Zo	*3	-	500	-	Ω
Power dissipation	P	*3, *4	-	60	-	mW

*2: Measured at half of the full well capacity. CTE is defined per pixel.
*3: V_{OD}=15 V.
*4: Power dissipation of the on-chip amplifier (each chip).

■ Electrical and optical characteristics (Ta=25 °C, unless otherwise noted)

Parameter			Symbol	Remark	Min.	Typ.	Max.	Unit
Saturation output voltage			Vsat		-	Fw × Sv	-	V
Full well capacity		Vertical	Fw		600	1200	-	ke^-
		Horizontal			600	1200	-	
		Summing			600	1200	-	
CCD node sensitivity			Sv	*5	0.45	0.6	-	$\mu V/e^-$
Dark current (MPP mode)			DS	*6	-	8	24	ke^-/pixel/s
Readout noise		Ta=25 °C	Nr	*7	-	90	-	e^-rms
		Ta=-40 °C			-	60	120	
Dynamic range			DR	*8	5000	20000	-	
X-ray response non-uniformity			XRNU	*9, *10	-	±10	±30	%
Blemish	Point defects *11	White spots	-		-	-	10	-
		Black spots			-	-	10	
	Cluster defects			*12	-	-	0	
	Column defects			*13	-	-	0	
X-ray resolution			ΔR		4	6	-	Lp/mm

*5: V_{OD}=15 V.
*6: Dark current doubles for every 5 to 7 °C.
*7: Operating frequency is 2 MHz.
*8: Dynamic range = Full well capacity / Readout noise
*9: X-ray irradiation of 60 kVp, measured at half of the full well capacity.
*10: XRNU (%) = Noise / Signal × 100
Noise: Fixed pattern noise (peak to peak)
Measuring region that is within 220.0 mm (H) × 6.0 mm (V) (refer to dimensional outline)
*11: White spots > 20 times of typ. dark signal (8 ke^-/pixel/s).
Black spots > 50 % reduction in response relative to adjacent pixels, measured at half of the full well capacity.
*12: continuous 2 to 9 point defects.
*13: continuous >10 point defects.

■ Resolution

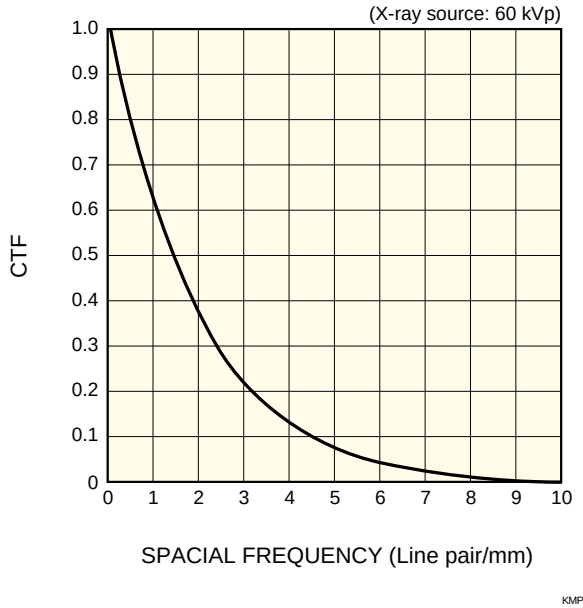

■ Response

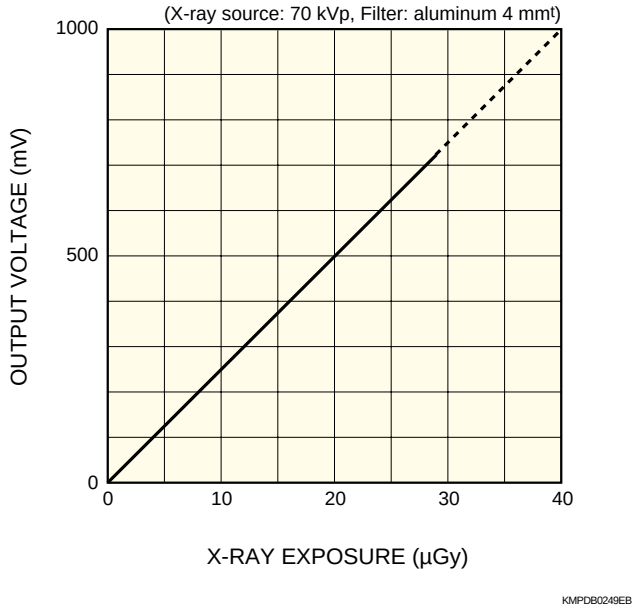

■ Device structure

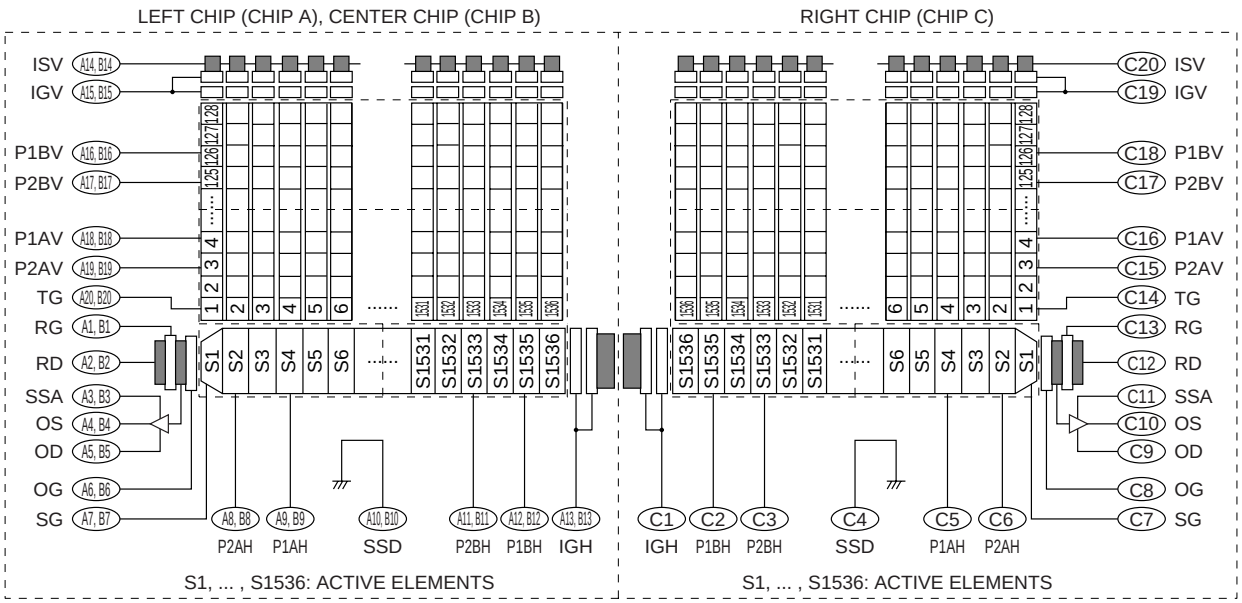

KMPDC0143EA

■ Pixel format

← Left Horizontal Direction → Right						
Blank	Optical black	Isolation	Effective	Isolation	Optical black	Blank
0	0	0	1536	0	0	0

Top ← Vertical direction → Bottom		
Isolation	Effective	Isolation
0	128	0

■ Timing chart (TDI operation)

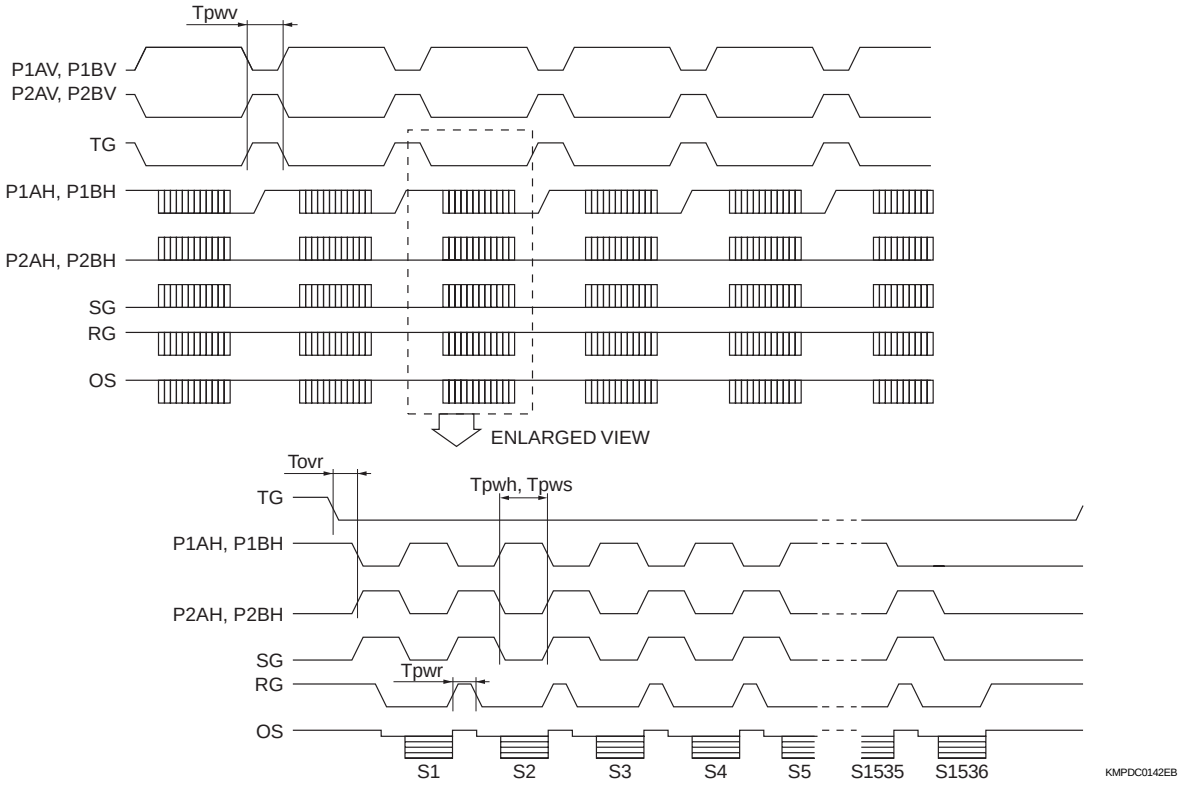

KMPDC0142EB

■ Timing chart (TDI operation, 2 × 2 pixel binning)

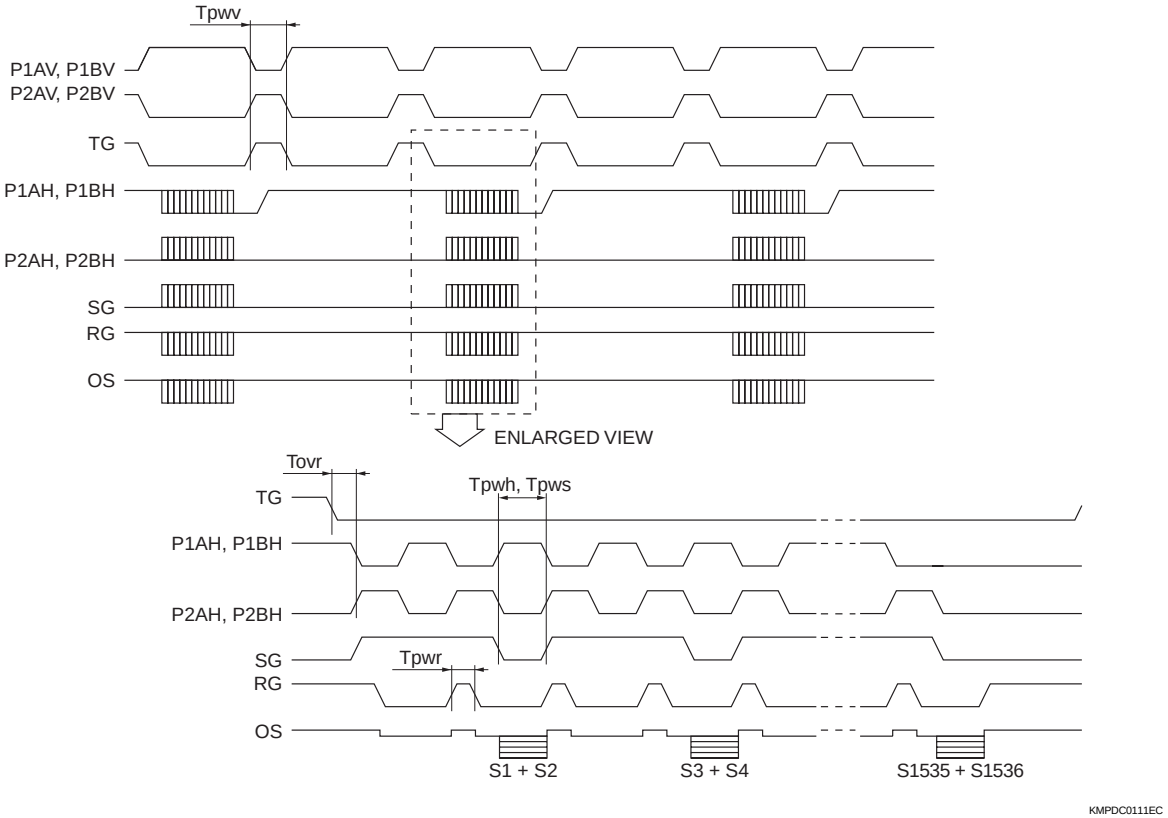

Parameter		Symbol	Remark	Min.	Typ.	Max.	Unit
P1AV, P1BV, P2AV, P2BV, TG	Pulse width	tpwv	*14, *15	30	60	-	μs
	Rise and fall time	tprv, tpfv		200	-	-	ns
P1AH, P1BH, P2AH, P2BH	Pulse width	tpwh	*15	125	250	-	ns
	Rise and fall time	tprh, tpfh		10	-	-	ns
	Duty ratio			-	50	-	%
SG	Pulse width	tpws		125	250	-	ns
	Rise and fall time	tprs, tpfs		10	-	-	ns
	Duty ratio			-	50	-	%
RG	Pulse width	tpwr		10	50	-	ns
	Rise and fall time	tprr, tpfr		5	-	-	ns
TG-P1AH, P1BH	Overlap time	tovr		10	20	-	μs

*14: TG terminal can be short-circuited to P2AV terminal.
*15: Symmetrical pulses should be overlapped at 50 % of maximum amplitude.

■ Dimensional outline (unit: mm)

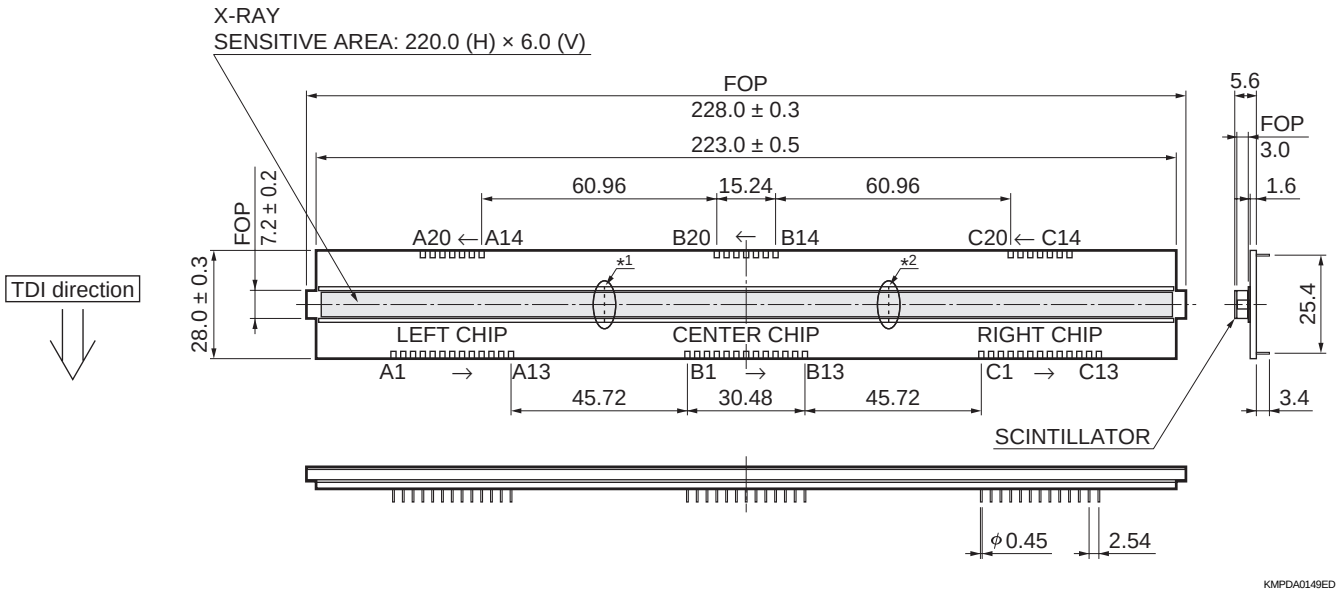

*1 Details

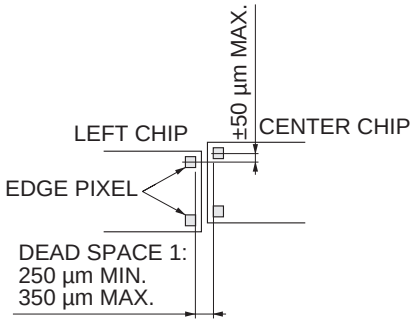

*2 Details

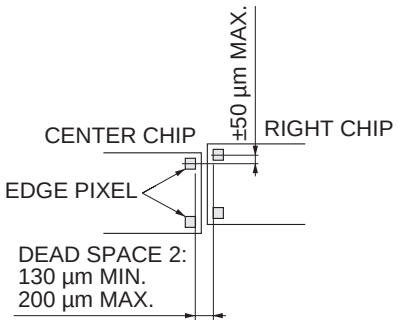

■ Pin connections

Pin No.	Symbol	Description	Remark
A1, B1	RG	Reset gate	
A2, B2	RD	Reset drain	
A3, B3	SSA	Analog ground	
A4, B4	OS	Output transistor source	
A5, B5	OD	Output transistor drain	
A6, B6	OG	Output gate	
A7, B7	SG	Summing gate	
A8, B8	P2AH	CCD horizontal register clock A-2	
A9, B9	P1AH	CCD horizontal register clock A-1	
A10, B10	SSD	Digital ground	
A11, B11	P2BH	CCD horizontal register clock B-2	Same timing as P2AH
A12, B12	P1BH	CCD horizontal register clock B-1	Same timing as P1AH
A13, B13	IGH	Test point (Horizontal input gate)	
A14, B14	ISV	Test point (Vertical input source)	Shorted to RD
A15, B15	IGV	Test point (Vertical input gate)	
A16, B16	P1BV	CCD vertical register clock B-1	Same timing as P1AV
A17, B17	P2BV	CCD vertical register clock B-2	Same timing as P2AV
A18, B18	P1AV	CCD vertical register clock A-1	
A19, B19	P2AV	CCD vertical register clock A-2	
A20, B20	TG	Transfer gate	
C1	IGH	Test point (Horizontal input gate)	
C2	P1BH	CCD horizontal register clock B-1	Same timing as P1AH
C3	P2BH	CCD horizontal register clock B-2	Same timing as P2AH
C4	SSD	Digital ground	
C5	P1AH	CCD horizontal register clock A-1	
C6	P2AH	CCD horizontal register clock A-2	
C7	SG	Summing gate	
C8	OG	Output gate	
C9	OD	Output transistor drain	
C10	OS	Output transistor source	
C11	SSA	Analog ground	
C12	RD	Reset drain	
C13	RG	Reset gate	
C14	TG	Transfer gate	
C15	P2AV	CCD vertical register clock A-2	
C16	P1AV	CCD vertical register clock A-1	
C17	P2BV	CCD vertical register clock B-2	Same timing as P2AV
C18	P1BV	CCD vertical register clock B-1	Same timing as P1AV
C19	IGV	Test point (Vertical input gate)	
C20	ISV	Test Point (Vertical input source)	Shorted to RD

■ Precautions for use (Electrostatic countermeasures)

* Handle these sensors with bare hands or wearing cotton gloves. In addition, wear anti-static clothing or use a wrist band with an earth ring, in order to prevent electrostatic damage due to electrical charges from friction.
* Avoid directly placing these sensors on a work-desk or work-bench that may carry an electrostatic charge.
* Provide ground lines or ground connection with the work-floor, work-desk and work-bench to allow static electricity to discharge.
* Ground the tools used to handle these sensors, such as tweezers and soldering irons.

It is not always necessary to provide all the electrostatic measures stated above. Implement these measures according to the amount of damage that occurs.

Information described in this material is current as of March, 2011. Product specifications are subject to change without prior notice due to improvements or other reasons. Before assembly into final products, please contact us for the delivery specification sheet to check the latest information.
Type numbers of products listed in the delivery specification sheets or supplied as samples may have a suffix "(X)" which means preliminary specifications or a suffix "(Z)" which means developmental specifications.
The product warranty is valid for one year after delivery and is limited to product repair or replacement for defects discovered and reported to us within that one year period. However, even if within the warranty period we accept absolutely no liability for any loss caused by natural disasters or improper product use.
Copying or reprinting the contents described in this material in whole or in part is prohibited without our prior permission.

HAMAMATSU

HAMAMATSU PHOTONICS K.K., Solid State Division
1126-1 Ichino-cho, Higashi-ku, Hamamatsu City, 435-8558 Japan, Telephone: (81) 53-434-3311, Fax: (81) 53-434-5184, www.hamamatsu.com
U.S.A.: Hamamatsu Corporation: 360 Foothill Road, P.O.Box 6910, Bridgewater, N.J. 08807-0910, U.S.A., Telephone: (1) 908-231-0960, Fax: (1) 908-231-1218
Germany: Hamamatsu Photonics Deutschland GmbH: Arzbergerstr. 10, D-82211 Herrsching am Ammersee, Germany, Telephone: (49) 8152-375-0, Fax: (49) 8152-265-8
France: Hamamatsu Photonics France S.A.R.L.: 19, Rue du Saule Trapu, Parc du Moulin de Massy, 91882 Massy Cedex, France, Telephone: 33-(1) 69 53 71 00, Fax: 33-(1) 69 53 71 10
United Kingdom: Hamamatsu Photonics UK Limited: 2 Howard Court, 10 Tewin Road, Welwyn Garden City, Hertfordshire AL7 1BW, United Kingdom, Telephone: (44) 1707-294888, Fax: (44) 1707-325777
North Europe: Hamamatsu Photonics Norden AB: Smidesvägen 12, SE-171 41 Solna, Sweden, Telephone: (46) 8-509-031-00, Fax: (46) 8-509-031-01
Italy: Hamamatsu Photonics Italia S.R.L.: Strada della Moia, 1 int. 6, 20020 Arese, (Milano), Italy, Telephone: (39) 02-935-81-733, Fax: (39) 02-935-81-741

Cat. No. KMPD1078E08
Apr. 2011 DN