ULTRA-SMALL PACKAGE HIGH-PRECISION VOLTAGE DETECTOR

S-808xxC Series

The S-808xxC series is a series of high-precision voltage detectors developed using CMOS process. The detection voltage is fixed internally with an accuracy of ±2.0%. Two output forms, Nch open-drain and CMOS output, are available. Ultra-low current consumption and miniature package lineup can meet demand from the portable device applications.

■ Features

- Ultra-low current consumption 1.3 μA typ. (detection voltage≤1.4 V, at V_{DD}=1.5 V)
  0.8 μA typ. (detection voltage≥1.5 V, at V_{DD}=3.5 V)
- High-precision detection voltage ±2.0 %
- Operating voltage range 0.65 V to 5.0 V (detection voltage≤1.4 V)
  0.95 V to 10.0 V (detection voltage≥1.5 V)
- Hysteresis characteristics 5 % typ.
- Detection voltage 0.8 V to 6.0 V (0.1 V step)
- Output form Nch open-drain output (Active Low)
  CMOS output (Active Low)

■ Applications

- Battery checkers
- Power failure detectors
- Power monitor for portable equipments such as pagers, calculators, electronic notebooks and remote controllers.
- Constant voltage power monitor for cameras, video equipments and communication devices.
- Power monitor for microcomputers and reset for CPUs.

■ Packages

Package name	Drawing code			
	Package	Tape	Reel	Zigzag
SC-82AB	NP004-A	NP004-A	NP004-A	—
SOT-23-5	MP005-A	MP005-A	MP005-A	—
SOT-89-3	UP003-A	UP003-A	UP003-A	—
SNT-4A	PF004-A	PF004-A	PF004-A	—
TO-92 (Bulk)	YS003-B	—	—	—
TO-92 (Tape and reel)	YF003-A	YF003-A	YF003-A	—
TO-92 (Tape and ammo)	YF003-A	YZ003-C	—	YZ003-C

■ Block Diagrams

1. Nch Open-drain Output Products

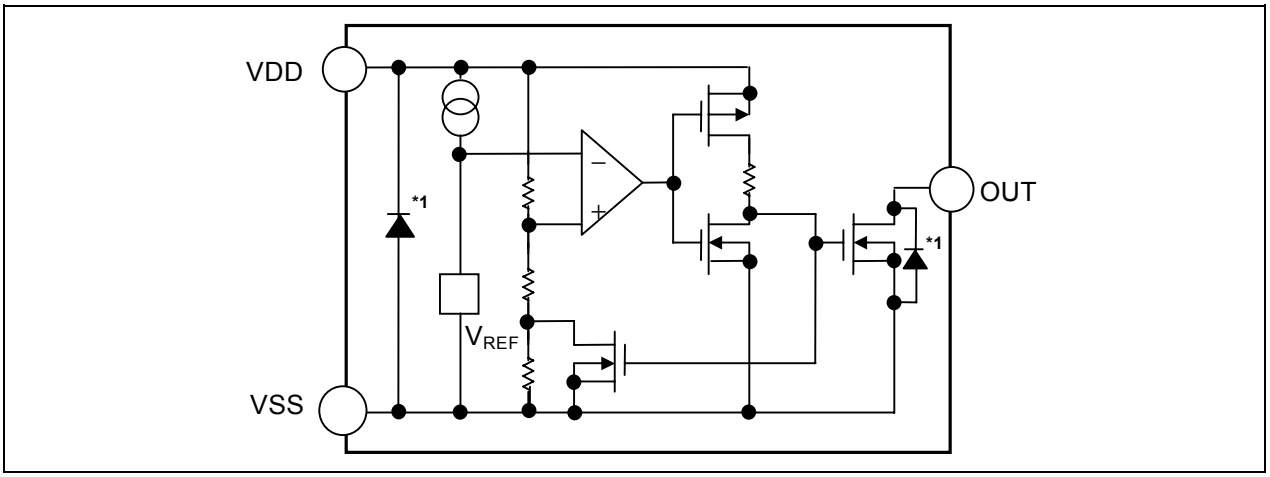

***1.** Parasitic diode

Figure 1

2. CMOS Output Products

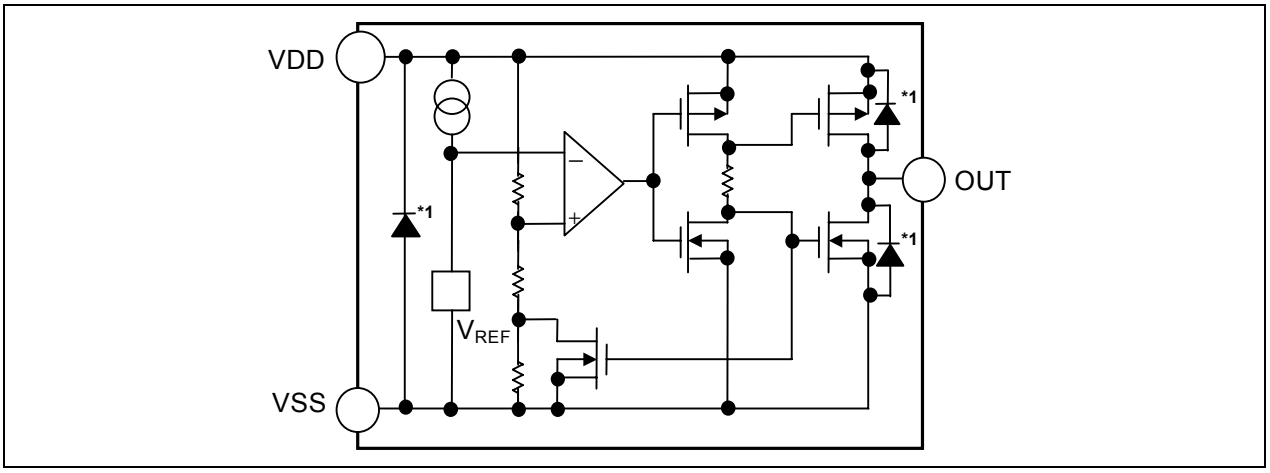

***1.** Parasitic diode

Figure 2

■ Product Name Structure

The detection voltage, output form and packages for S-808xxC Series can be selected at the user's request. Refer to the "**1. Product Name**" for the construction of the product name and "**2. Product Name List**" for the full product names.

1. Product Name

1-1. SC-82AB, SOT-23-5, SOT-89-3 packages

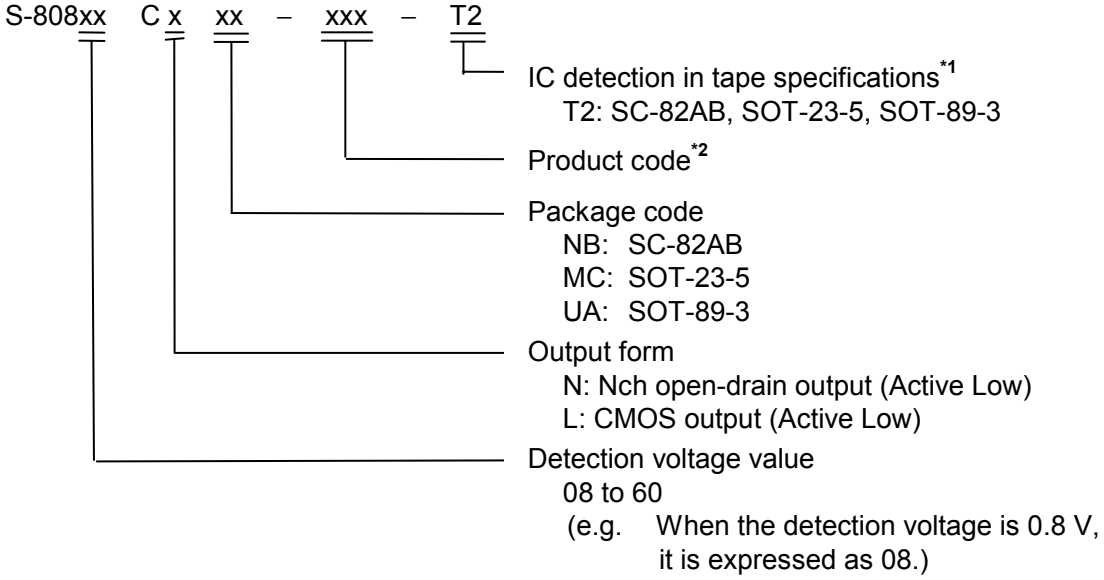

***1.** Refer to the taping specifications at the end of this book. T2 is the standard.
***2.** Refer to the **Table 1 and 3** in the "**2. Product Name List**"

1-2. SNT-4A packages

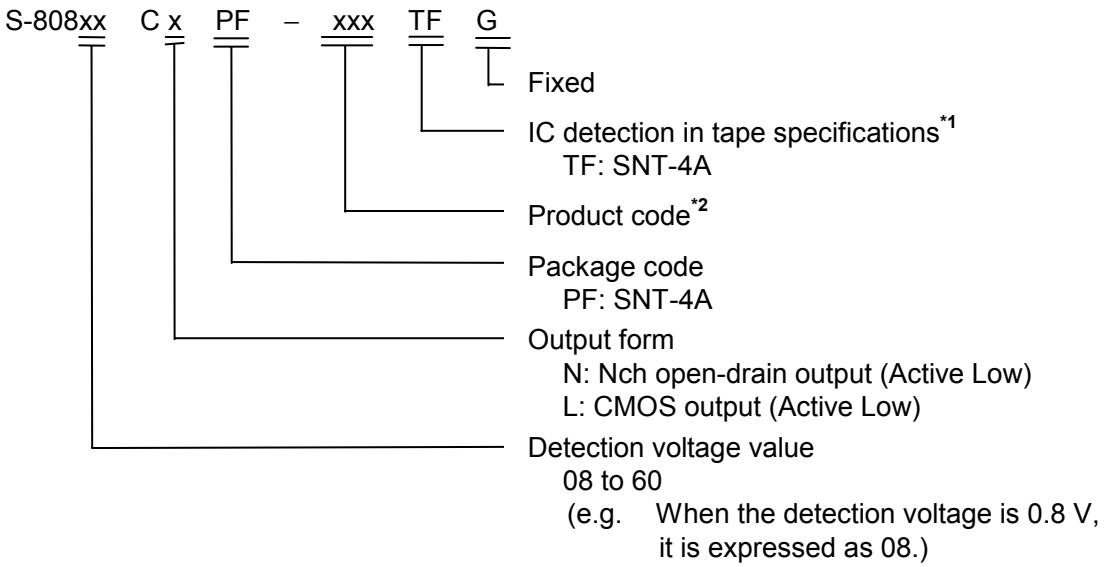

***1.** Refer to the taping specifications at the end of this book. TF is the standard.
***2.** Refer to the **Table 2 and 4** in the "**2. Product Name List**"

1-3. TO-92 package

S-808xx C x Y – x

- Packing form
  - B: Bulk
  - T: Tape and reel
  - Z: Tape and ammo
- Package code
  - Y: TO-92
- Output form
  - N: Nch open-drain output (Active Low)
  - L: CMOS output (Active Low)
- Detection voltage value
  - 15 to 60
  - (e.g. When the detection voltage is 1.5 V, it is expressed as 15.)

2. Product Name List

2-1. Nch Open-drain Output Products

Table 1 (1/2)

Detection voltage range	Hysteresis width (Typ.)	SC-82AB	SOT-23-5	SOT-89-3
0.8 V±2.0 %	0.034 V	S-80808CNNB-B9M-T2	—	—
0.9 V±2.0 %	0.044 V	S-80809CNNB-B9N-T2	—	—
1.0 V±2.0 %	0.054 V	S-80810CNNB-B9O-T2	—	—
1.1 V±2.0 %	0.064 V	S-80811CNNB-B9P-T2	—	—
1.2 V±2.0 %	0.073 V	S-80812CNNB-B9Q-T2	—	—
1.3 V±2.0 %	0.083 V	S-80813CNNB-B9R-T2	—	—
1.4 V±2.0 %	0.093 V	S-80814CNNB-B9S-T2	—	—
1.5 V±2.0 %	0.075 V	S-80815CNNB-B8A-T2	S-80815CNMC-B8A-T2	S-80815CNUA-B8A-T2
1.6 V±2.0 %	0.080 V	S-80816CNNB-B8B-T2	S-80816CNMC-B8B-T2	S-80816CNUA-B8B-T2
1.7 V±2.0 %	0.085 V	S-80817CNNB-B8C-T2	S-80817CNMC-B8C-T2	S-80817CNUA-B8C-T2
1.8 V±2.0 %	0.090 V	S-80818CNNB-B8D-T2	S-80818CNMC-B8D-T2	S-80818CNUA-B8D-T2
1.9 V±2.0 %	0.095 V	S-80819CNNB-B8E-T2	S-80819CNMC-B8E-T2	S-80819CNUA-B8E-T2
2.0 V±2.0 %	0.100 V	S-80820CNNB-B8F-T2	S-80820CNMC-B8F-T2	S-80820CNUA-B8F-T2
2.1 V±2.0 %	0.105 V	S-80821CNNB-B8G-T2	S-80821CNMC-B8G-T2	S-80821CNUA-B8G-T2
2.2 V±2.0 %	0.110 V	S-80822CNNB-B8H-T2	S-80822CNMC-B8H-T2	S-80822CNUA-B8H-T2
2.3 V±2.0 %	0.115 V	S-80823CNNB-B8I-T2	S-80823CNMC-B8I-T2	S-80823CNUA-B8I-T2
2.4 V±2.0 %	0.120 V	S-80824CNNB-B8J-T2	S-80824CNMC-B8J-T2	S-80824CNUA-B8J-T2
2.4 V typ.	4.4 ± 0.1 V[*1]	—	—	S-80824KNUA-D2B-T2[*2]
2.5 V±2.0 %	0.125 V	S-80825CNNB-B8K-T2	S-80825CNMC-B8K-T2	S-80825CNUA-B8K-T2
2.6 V±2.0 %	0.130 V	S-80826CNNB-B8L-T2	S-80826CNMC-B8L-T2	S-80826CNUA-B8L-T2
2.7 V±2.0 %	0.135 V	S-80827CNNB-B8M-T2	S-80827CNMC-B8M-T2	S-80827CNUA-B8M-T2
2.8 V±2.0 %	0.140 V	S-80828CNNB-B8N-T2	S-80828CNMC-B8N-T2	S-80828CNUA-B8N-T2
2.9 V±2.0 %	0.145 V	S-80829CNNB-B8O-T2	S-80829CNMC-B8O-T2	S-80829CNUA-B8O-T2
3.0 V±2.0 %	0.150 V	S-80830CNNB-B8P-T2	S-80830CNMC-B8P-T2	S-80830CNUA-B8P-T2
3.1 V±2.0 %	0.155 V	S-80831CNNB-B8Q-T2	S-80831CNMC-B8Q-T2	S-80831CNUA-B8Q-T2

Table 1 (2/2)

Detection voltage range	Hysteresis width (Typ.)	SC-82AB	SOT-23-5	SOT-89-3
3.2 V±2.0 %	0.160 V	S-80832CNNB-B8R-T2	S-80832CNMC-B8R-T2	S-80832CNUA-B8R-T2
3.3 V±2.0 %	0.165 V	S-80833CNNB-B8S-T2	S-80833CNMC-B8S-T2	S-80833CNUA-B8S-T2
3.4 V±2.0 %	0.170 V	S-80834CNNB-B8T-T2	S-80834CNMC-B8T-T2	S-80834CNUA-B8T-T2
3.5 V±2.0 %	0.175 V	S-80835CNNB-B8U-T2	S-80835CNMC-B8U-T2	S-80835CNUA-B8U-T2
3.6 V±2.0 %	0.180 V	S-80836CNNB-B8V-T2	S-80836CNMC-B8V-T2	S-80836CNUA-B8V-T2
3.7 V±2.0 %	0.185 V	S-80837CNNB-B8W-T2	S-80837CNMC-B8W-T2	S-80837CNUA-B8W-T2
3.8 V±2.0 %	0.190 V	S-80838CNNB-B8X-T2	S-80838CNMC-B8X-T2	S-80838CNUA-B8X-T2
3.9 V±2.0 %	0.195 V	S-80839CNNB-B8Y-T2	S-80839CNMC-B8Y-T2	S-80839CNUA-B8Y-T2
4.0 V±2.0 %	0.200 V	S-80840CNNB-B8Z-T2	S-80840CNMC-B8Z-T2	S-80840CNUA-B8Z-T2
4.1 V±2.0 %	0.205 V	S-80841CNNB-B82-T2	S-80841CNMC-B82-T2	S-80841CNUA-B82-T2
4.2 V±2.0 %	0.210 V	S-80842CNNB-B83-T2	S-80842CNMC-B83-T2	S-80842CNUA-B83-T2
4.3 V±2.0 %	0.215 V	S-80843CNNB-B84-T2	S-80843CNMC-B84-T2	S-80843CNUA-B84-T2
4.4 V±2.0 %	0.220 V	S-80844CNNB-B85-T2	S-80844CNMC-B85-T2	S-80844CNUA-B85-T2
4.5 V±2.0 %	0.225 V	S-80845CNNB-B86-T2	S-80845CNMC-B86-T2	S-80845CNUA-B86-T2
4.6 V±2.0 %	0.230 V	S-80846CNNB-B87-T2	S-80846CNMC-B87-T2	S-80846CNUA-B87-T2
4.6 V± 0.10 V	0.10 V max.	—	—	S-80846KNUA-D2C-T2*[3]
4.7 V±2.0 %	0.235 V	S-80847CNNB-B88-T2	S-80847CNMC-B88-T2	S-80847CNUA-B88-T2
4.8 V±2.0 %	0.240 V	S-80848CNNB-B89-T2	S-80848CNMC-B89-T2	S-80848CNUA-B89-T2
4.9 V±2.0 %	0.245 V	S-80849CNNB-B9A-T2	S-80849CNMC-B9A-T2	S-80849CNUA-B9A-T2
5.0 V±2.0 %	0.250 V	S-80850CNNB-B9B-T2	S-80850CNMC-B9B-T2	S-80850CNUA-B9B-T2
5.1 V±2.0 %	0.255 V	S-80851CNNB-B9C-T2	S-80851CNMC-B9C-T2	S-80851CNUA-B9C-T2
5.2 V±2.0 %	0.260 V	S-80852CNNB-B9D-T2	S-80852CNMC-B9D-T2	S-80852CNUA-B9D-T2
5.3 V±2.0 %	0.265 V	S-80853CNNB-B9E-T2	S-80853CNMC-B9E-T2	S-80853CNUA-B9E-T2
5.4 V±2.0 %	0.270 V	S-80854CNNB-B9F-T2	S-80854CNMC-B9F-T2	S-80854CNUA-B9F-T2
5.5 V±2.0 %	0.275 V	S-80855CNNB-B9G-T2	S-80855CNMC-B9G-T2	S-80855CNUA-B9G-T2
5.6 V±2.0 %	0.280 V	S-80856CNNB-B9H-T2	S-80856CNMC-B9H-T2	S-80856CNUA-B9H-T2
5.7 V±2.0 %	0.285 V	S-80857CNNB-B9I-T2	S-80857CNMC-B9I-T2	S-80857CNUA-B9I-T2
5.8 V±2.0 %	0.290 V	S-80858CNNB-B9J-T2	S-80858CNMC-B9J-T2	S-80858CNUA-B9J-T2
5.9 V±2.0 %	0.295 V	S-80859CNNB-B9K-T2	S-80859CNMC-B9K-T2	S-80859CNUA-B9K-T2
6.0 V±2.0 %	0.300 V	S-80860CNNB-B9L-T2	S-80860CNMC-B9L-T2	S-80860CNUA-B9L-T2

***1.** Describes the release voltage.
***2.** Refer to the **Table 18** in "■ Electricala Characteristics for Customized Products" for electrical characteristics.
***3.** Refer to the **Table 20** in "■ Electricala Characteristics for Customized Products" for electrical characteristics

Table 2 (1/2)

Detection voltage range	Hysteresis width (Typ.)	SNT-4A	TO-92[*1]
0.8 V±2.0 %	0.034 V	S-80808CNPF-B9MTFG	—
0.9 V±2.0 %	0.044 V	S-80809CNPF-B9NTFG	—
1.0 V±2.0 %	0.054 V	S-80810CNPF-B9OTFG	—
1.1 V±2.0 %	0.064 V	S-80811CNPF-B9PTFG	—
1.2 V±2.0 %	0.073 V	S-80812CNPF-B9QTFG	—
1.3 V±2.0 %	0.083 V	S-80813CNPF-B9RTFG	—
1.4 V±2.0 %	0.093 V	S-80814CNPF-B9STFG	—
1.5 V±2.0 %	0.075 V	S-80815CNPF-B8ATFG	S-80815CNY-x
1.6 V±2.0 %	0.080 V	S-80816CNPF-B8BTFG	S-80816CNY-x
1.7 V±2.0 %	0.085 V	S-80817CNPF-B8CTFG	S-80817CNY-x
1.8 V±2.0 %	0.090 V	S-80818CNPF-B8DTFG	S-80818CNY-x
1.9 V±2.0 %	0.095 V	S-80819CNPF-B8ETFG	S-80819CNY-x
2.0 V±2.0 %	0.100 V	S-80820CNPF-B8FTFG	S-80820CNY-x
2.1 V±2.0 %	0.105 V	S-80821CNPF-B8GTFG	S-80821CNY-x
2.2 V±2.0 %	0.110 V	S-80822CNPF-B8HTFG	S-80822CNY-x
2.3 V±2.0 %	0.115 V	S-80823CNPF-B8ITFG	S-80823CNY-x
2.4 V±2.0 %	0.120 V	S-80824CNPF-B8JTFG	S-80824CNY-x
2.4 V typ.	4.4 ± 0.1 V[*2]	—	S-80824KNY-x[*3]
2.5 V±2.0 %	0.125 V	S-80825CNPF-B8KTFG	S-80825CNY-x
2.6 V±2.0 %	0.130 V	S-80826CNPF-B8LTFG	S-80826CNY-x
2.7 V±2.0 %	0.135 V	S-80827CNPF-B8MTFG	S-80827CNY-x
2.8 V±2.0 %	0.140 V	S-80828CNPF-B8NTFG	S-80828CNY-x
2.9 V±2.0 %	0.145 V	S-80829CNPF-B8OTFG	S-80829CNY-x
3.0 V±2.0 %	0.150 V	S-80830CNPF-B8PTFG	S-80830CNY-x
3.1 V±2.0 %	0.155 V	S-80831CNPF-B8QTFG	S-80831CNY-x
3.2 V±2.0 %	0.160 V	S-80832CNPF-B8RTFG	S-80832CNY-x
3.3 V±2.0 %	0.165 V	S-80833CNPF-B8STFG	S-80833CNY-x
3.4 V±2.0 %	0.170 V	S-80834CNPF-B8TTFG	S-80834CNY-x
3.5 V±2.0 %	0.175 V	S-80835CNPF-B8UTFG	S-80835CNY-x
3.6 V±2.0 %	0.180 V	S-80836CNPF-B8VTFG	S-80836CNY-x
3.7 V±2.0 %	0.185 V	S-80837CNPF-B8WTFG	S-80837CNY-x
3.8 V±2.0 %	0.190 V	S-80838CNPF-B8XTFG	S-80838CNY-x
3.9 V±2.0 %	0.195 V	S-80839CNPF-B8YTFG	S-80839CNY-x
4.0 V±2.0 %	0.200 V	S-80840CNPF-B8ZTFG	S-80840CNY-x
4.1 V±2.0 %	0.205 V	S-80841CNPF-B82TFG	S-80841CNY-x
4.2 V±2.0 %	0.210 V	S-80842CNPF-B83TFG	S-80842CNY-x
4.3 V±2.0 %	0.215 V	S-80843CNPF-B84TFG	S-80843CNY-x
4.4 V±2.0 %	0.220 V	S-80844CNPF-B85TFG	S-80844CNY-x
4.5 V±2.0 %	0.225 V	S-80845CNPF-B86TFG	S-80845CNY-x
4.6 V±2.0 %	0.230 V	S-80846CNPF-B87TFG	S-80846CNY-x
4.6 V±0.10 V	0.10 V max.	—	S-80846KNY-x[*4]
4.7 V±2.0 %	0.235 V	S-80847CNPF-B88TFG	S-80847CNY-x
4.8 V±2.0 %	0.240 V	S-80848CNPF-B89TFG	S-80848CNY-x
4.9 V±2.0 %	0.245 V	S-80849CNPF-B9ATFG	S-80849CNY-x
5.0 V±2.0 %	0.250 V	S-80850CNPF-B9BTFG	S-80850CNY-x
5.1 V±2.0 %	0.255 V	S-80851CNPF-B9CTFG	S-80851CNY-x

Table 2 (2/2)

Detection voltage range	Hysteresis width (Typ.)	SNT-4A	TO-92*1
5.2 V±2.0 %	0.260 V	S-80852CNPF-B9DTFG	S-80852CNY-x
5.3 V±2.0 %	0.265 V	S-80853CNPF-B9ETFG	S-80853CNY-x
5.4 V±2.0 %	0.270 V	S-80854CNPF-B9FTFG	S-80854CNY-x
5.5 V±2.0 %	0.275 V	S-80855CNPF-B9GTFG	S-80855CNY-x
5.6 V±2.0 %	0.280 V	S-80856CNPF-B9HTFG	S-80856CNY-x
5.7 V±2.0 %	0.285 V	S-80857CNPF-B9ITFG	S-80857CNY-x
5.8 V±2.0 %	0.290 V	S-80858CNPF-B9JTFG	S-80858CNY-x
5.9 V±2.0 %	0.295 V	S-80859CNPF-B9KTFG	S-80859CNY-x
6.0 V±2.0 %	0.300 V	S-80860CNPF-B9LTFG	S-80860CNY-x

***1.** x changes according to the packing form in TO-92. S: Bulk, F: Tape and reel, Z: Tape and ammo
***2.** Describes the release voltage.
***3.** Refer to the **Table 18** in "■ Electricala Characteristics for Customized Products" for electrical characteristics.
***4.** Refer to the **Table 20** in "■ Electricala Characteristics for Customized Products" for electrical characteristics

2-2. CMOS Output Products

Table 3 (1/2)

Detection voltage range	Hysteresis width (Typ.)	SC-82AB	SOT-23-5	SOT-89-3
0.8 V±2.0 %	0.034 V	S-80808CLNB-B7M-T2	—	—
0.9 V±2.0 %	0.044 V	S-80809CLNB-B7N-T2	—	—
1.0 V±2.0 %	0.054 V	S-80810CLNB-B7O-T2	—	—
1.1 V±2.0 %	0.064 V	S-80811CLNB-B7P-T2	—	—
1.2 V±2.0 %	0.073 V	S-80812CLNB-B7Q-T2	—	—
1.3 V±2.0 %	0.083 V	S-80813CLNB-B7R-T2	—	—
1.4 V±2.0 %	0.093 V	S-80814CLNB-B7S-T2	—	—
1.5 V±2.0 %	0.075 V	S-80815CLNB-B6A-T2	S-80815CLMC-B6A-T2	S-80815CLUA-B6A-T2
1.6 V±2.0 %	0.080 V	S-80816CLNB-B6B-T2	S-80816CLMC-B6B-T2	S-80816CLUA-B6B-T2
1.7 V±2.0 %	0.085 V	S-80817CLNB-B6C-T2	S-80817CLMC-B6C-T2	S-80817CLUA-B6C-T2
1.8 V±2.0 %	0.090 V	S-80818CLNB-B6D-T2	S-80818CLMC-B6D-T2	S-80818CLUA-B6D-T2
1.9 V±2.0 %	0.095 V	S-80819CLNB-B6E-T2	S-80819CLMC-B6E-T2	S-80819CLUA-B6E-T2
2.0 V±2.0 %	0.100 V	S-80820CLNB-B6F-T2	S-80820CLMC-B6F-T2	S-80820CLUA-B6F-T2
2.1 V±2.0 %	0.105 V	S-80821CLNB-B6G-T2	S-80821CLMC-B6G-T2	S-80821CLUA-B6G-T2
2.2 V±2.0 %	0.110 V	S-80822CLNB-B6H-T2	S-80822CLMC-B6H-T2	S-80822CLUA-B6H-T2
2.3 V±2.0 %	0.115 V	S-80823CLNB-B6I-T2	S-80823CLMC-B6I-T2	S-80823CLUA-B6I-T2
2.4 V±2.0 %	0.120 V	S-80824CLNB-B6J-T2	S-80824CLMC-B6J-T2	S-80824CLUA-B6J-T2
2.5 V±2.0 %	0.125 V	S-80825CLNB-B6K-T2	S-80825CLMC-B6K-T2	S-80825CLUA-B6K-T2
2.6 V±2.0 %	0.130 V	S-80826CLNB-B6L-T2	S-80826CLMC-B6L-T2	S-80826CLUA-B6L-T2
2.7 V±2.0 %	0.135 V	S-80827CLNB-B6M-T2	S-80827CLMC-B6M-T2	S-80827CLUA-B6M-T2
2.8 V±2.0 %	0.140 V	S-80828CLNB-B6N-T2	S-80828CLMC-B6N-T2	S-80828CLUA-B6N-T2
2.9 V±2.0 %	0.145 V	S-80829CLNB-B6O-T2	S-80829CLMC-B6O-T2	S-80829CLUA-B6O-T2
3.0 V±2.0 %	0.150 V	S-80830CLNB-B6P-T2	S-80830CLMC-B6P-T2	S-80830CLUA-B6P-T2
3.1 V±2.0 %	0.155 V	S-80831CLNB-B6Q-T2	S-80831CLMC-B6Q-T2	S-80831CLUA-B6Q-T2
3.2 V±2.0 %	0.160 V	S-80832CLNB-B6R-T2	S-80832CLMC-B6R-T2	S-80832CLUA-B6R-T2
3.3 V±2.0 %	0.165 V	S-80833CLNB-B6S-T2	S-80833CLMC-B6S-T2	S-80833CLUA-B6S-T2
3.4 V±2.0 %	0.170 V	S-80834CLNB-B6T-T2	S-80834CLMC-B6T-T2	S-80834CLUA-B6T-T2
3.5 V±2.0 %	0.175 V	S-80835CLNB-B6U-T2	S-80835CLMC-B6U-T2	S-80835CLUA-B6U-T2
3.6 V±2.0 %	0.180 V	S-80836CLNB-B6V-T2	S-80836CLMC-B6V-T2	S-80836CLUA-B6V-T2
3.7 V±2.0 %	0.185 V	S-80837CLNB-B6W-T2	S-80837CLMC-B6W-T2	S-80837CLUA-B6W-T2
3.8 V±2.0 %	0.190 V	S-80838CLNB-B6X-T2	S-80838CLMC-B6X-T2	S-80838CLUA-B6X-T2
3.9 V±2.0 %	0.195 V	S-80839CLNB-B6Y-T2	S-80839CLMC-B6Y-T2	S-80839CLUA-B6Y-T2
4.0 V±2.0 %	0.200 V	S-80840CLNB-B6Z-T2	S-80840CLMC-B6Z-T2	S-80840CLUA-B6Z-T2
4.1 V±2.0 %	0.205 V	S-80841CLNB-B62-T2	S-80841CLMC-B62-T2	S-80841CLUA-B62-T2
4.2 V±2.0 %	0.210 V	S-80842CLNB-B63-T2	S-80842CLMC-B63-T2	S-80842CLUA-B63-T2
4.3 V±2.0 %	0.215 V	S-80843CLNB-B64-T2	S-80843CLMC-B64-T2	S-80843CLUA-B64-T2
4.4 V±2.0 %	0.220 V	S-80844CLNB-B65-T2	S-80844CLMC-B65-T2	S-80844CLUA-B65-T2
4.45 V typ.	4.70 V max.*1	—	—	S-80844KLUA-D2A-T2*2
4.5 V±2.0 %	0.225 V	S-80845CLNB-B66-T2	S-80845CLMC-B66-T2	S-80845CLUA-B66-T2
4.6 V±2.0 %	0.230 V	S-80846CLNB-B67-T2	S-80846CLMC-B67-T2	S-80846CLUA-B67-T2
4.7 V±2.0 %	0.235 V	S-80847CLNB-B68-T2	S-80847CLMC-B68-T2	S-80847CLUA-B68-T2
4.8 V±2.0 %	0.240 V	S-80848CLNB-B69-T2	S-80848CLMC-B69-T2	S-80848CLUA-B69-T2
4.9 V±2.0 %	0.245 V	S-80849CLNB-B7A-T2	S-80849CLMC-B7A-T2	S-80849CLUA-B7A-T2
5.0 V±2.0 %	0.250 V	S-80850CLNB-B7B-T2	S-80850CLMC-B7B-T2	S-80850CLUA-B7B-T2
5.1 V±2.0 %	0.255 V	S-80851CLNB-B7C-T2	S-80851CLMC-B7C-T2	S-80851CLUA-B7C-T2

Table 3 (2/2)

Detection voltage range	Hysteresis width (Typ.)	SC-82AB	SOT-23-5	SOT-89-3
5.2 V±2.0 %	0.260 V	S-80852CLNB-B7D-T2	S-80852CLMC-B7D-T2	S-80852CLUA-B7D-T2
5.3 V±2.0 %	0.265 V	S-80853CLNB-B7E-T2	S-80853CLMC-B7E-T2	S-80853CLUA-B7E-T2
5.4 V±2.0 %	0.270 V	S-80854CLNB-B7F-T2	S-80854CLMC-B7F-T2	S-80854CLUA-B7F-T2
5.5 V±2.0 %	0.275 V	S-80855CLNB-B7G-T2	S-80855CLMC-B7G-T2	S-80855CLUA-B7G-T2
5.6 V±2.0 %	0.280 V	S-80856CLNB-B7H-T2	S-80856CLMC-B7H-T2	S-80856CLUA-B7H-T2
5.7 V±2.0 %	0.285 V	S-80857CLNB-B7I-T2	S-80857CLMC-B7I-T2	S-80857CLUA-B7I-T2
5.8 V±2.0 %	0.290 V	S-80858CLNB-B7J-T2	S-80858CLMC-B7J-T2	S-80858CLUA-B7J-T2
5.9 V±2.0 %	0.295 V	S-80859CLNB-B7K-T2	S-80859CLMC-B7K-T2	S-80859CLUA-B7K-T2
6.0 V±2.0 %	0.300 V	S-80860CLNB-B7L-T2	S-80860CLMC-B7L-T2	S-80860CLUA-B7L-T2

***1.** Describes the release voltage.
***2.** Refer to the **Table 19** in "■ Electricala Characteristics for Customized Products" for electrical characteristics.

Table 4 (1/2)

Detection voltage range	Hysteresis width (Typ.)	SNT-4A	TO-92[*1]
0.8 V±2.0 %	0.034 V	S-80808CLPF-B7MTFG	—
0.9 V±2.0 %	0.044 V	S-80809CLPF-B7NTFG	—
1.0 V±2.0 %	0.054 V	S-80810CLPF-B7OTFG	—
1.1 V±2.0 %	0.064 V	S-80811CLPF-B7PTFG	—
1.2 V±2.0 %	0.073 V	S-80812CLPF-B7QTFG	—
1.3 V±2.0 %	0.083 V	S-80813CLPF-B7RTFG	—
1.4 V±2.0 %	0.093 V	S-80814CLPF-B7STFG	—
1.5 V±2.0 %	0.075 V	S-80815CLPF-B6ATFG	S-80815CLY-x
1.6 V±2.0 %	0.080 V	S-80816CLPF-B6BTFG	S-80816CLY-x
1.7 V±2.0 %	0.085 V	S-80817CLPF-B6CTFG	S-80817CLY-x
1.8 V±2.0 %	0.090 V	S-80818CLPF-B6DTFG	S-80818CLY-x
1.9 V±2.0 %	0.095 V	S-80819CLPF-B6ETFG	S-80819CLY-x
2.0 V±2.0 %	0.100 V	S-80820CLPF-B6FTFG	S-80820CLY-x
2.1 V±2.0 %	0.105 V	S-80821CLPF-B6GTFG	S-80821CLY-x
2.2 V±2.0 %	0.110 V	S-80822CLPF-B6HTFG	S-80822CLY-x
2.3 V±2.0 %	0.115 V	S-80823CLPF-B6ITFG	S-80823CLY-x
2.4 V±2.0 %	0.120 V	S-80824CLPF-B6JTFG	S-80824CLY-x
2.5 V±2.0 %	0.125 V	S-80825CLPF-B6KTFG	S-80825CLY-x
2.6 V±2.0 %	0.130 V	S-80826CLPF-B6LTFG	S-80826CLY-x
2.7 V±2.0 %	0.135 V	S-80827CLPF-B6MTFG	S-80827CLY-x
2.8 V±2.0 %	0.140 V	S-80828CLPF-B6NTFG	S-80828CLY-x
2.9 V±2.0 %	0.145 V	S-80829CLPF-B6OTFG	S-80829CLY-x
3.0 V±2.0 %	0.150 V	S-80830CLPF-B6PTFG	S-80830CLY-x
3.1 V±2.0 %	0.155 V	S-80831CLPF-B6QTFG	S-80831CLY-x
3.2 V±2.0 %	0.160 V	S-80832CLPF-B6RTFG	S-80832CLY-x
3.3 V±2.0 %	0.165 V	S-80833CLPF-B6STFG	S-80833CLY-x
3.4 V±2.0 %	0.170 V	S-80834CLPF-B6TTFG	S-80834CLY-x
3.5 V±2.0 %	0.175 V	S-80835CLPF-B6UTFG	S-80835CLY-x
3.6 V±2.0 %	0.180 V	S-80836CLPF-B6VTFG	S-80836CLY-x
3.7 V±2.0 %	0.185 V	S-80837CLPF-B6WTFG	S-80837CLY-x
3.8 V±2.0 %	0.190 V	S-80838CLPF-B6XTFG	S-80838CLY-x

Table 4 (2/2)

Detection voltage range	Hysteresis width (Typ.)	SNT-4A	TO-92*2
3.9 V±2.0 %	0.195 V	S-80839CLPF-B6YTFG	S-80839CLY-x
4.0 V±2.0 %	0.200 V	S-80840CLPF-B6ZTFG	S-80840CLY-x
4.1 V±2.0 %	0.205 V	S-80841CLPF-B62TFG	S-80841CLY-x
4.2 V±2.0 %	0.210 V	S-80842CLPF-B63TFG	S-80842CLY-x
4.3 V±2.0 %	0.215 V	S-80843CLPF-B64TFG	S-80843CLY-x
4.4 V±2.0 %	0.220 V	S-80844CLPF-B65TFG	S-80844CLY-x
4.45 V typ.	4.70 V max.*2	—	S-80844KLY-x*3
4.5 V±2.0 %	0.225 V	S-80845CLPF-B66TFG	S-80845CLY-x
4.6 V±2.0 %	0.230 V	S-80846CLPF-B67TFG	S-80846CLY-x
4.7 V±2.0 %	0.235 V	S-80847CLPF-B68TFG	S-80847CLY-x
4.8 V±2.0 %	0.240 V	S-80848CLPF-B69TFG	S-80848CLY-x
4.9 V±2.0 %	0.245 V	S-80849CLPF-B7ATFG	S-80849CLY-x
5.0 V±2.0 %	0.250 V	S-80850CLPF-B7BTFG	S-80850CLY-x
5.1 V±2.0 %	0.255 V	S-80851CLPF-B7CTFG	S-80851CLY-x
5.2 V±2.0 %	0.260 V	S-80852CLPF-B7DTFG	S-80852CLY-x
5.3 V±2.0 %	0.265 V	S-80853CLPF-B7ETFG	S-80853CLY-x
5.4 V±2.0 %	0.270 V	S-80854CLPF-B7FTFG	S-80854CLY-x
5.5 V±2.0 %	0.275 V	S-80855CLPF-B7GTFG	S-80855CLY-x
5.6 V±2.0 %	0.280 V	S-80856CLPF-B7HTFG	S-80856CLY-x
5.7 V±2.0 %	0.285 V	S-80857CLPF-B7ITFG	S-80857CLY-x
5.8 V±2.0 %	0.290 V	S-80858CLPF-B7JTFG	S-80858CLY-x
5.9 V±2.0 %	0.295 V	S-80859CLPF-B7KTFG	S-80859CLY-x
6.0 V±2.0 %	0.300 V	S-80860CLPF-B7LTFG	S-80860CLY-x

***1.** x changes according to the packing form in TO-92. S: Bulk, F: Tape and reel, Z: Tape and ammo

***2.** Describes the release voltage.

***3.** Refer to the **Table 19** in "■ Electricala Characteristics for Customized Products" for electrical characteristics.

■ Output Forms

1. Output Forms in S-808xxC Series

Table 5

	Nch open-drain output products (Active Low)	CMOS output products (Active Low)
S-808xxC Series	"N" is the last letter of the product name. e.g. S-80815CN	"L" is the last letter of the product name. e.g. S-80815CL

2. Output form and their usage

Table 6

Usage	Nch open-drain output products (Active Low)	CMOS output products (Active Low)
Different power supplies	Yes	No
Active Low reset for CPUs	Yes	Yes
Active High reset for CPUs	No	No
Detection voltage change by resistor divider	Yes	No

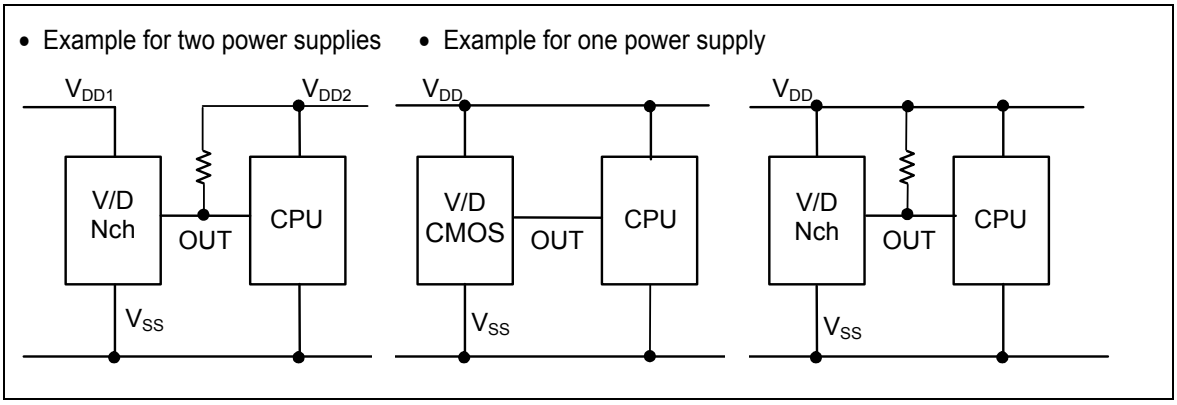

Figure 3

■ Pin Configurations

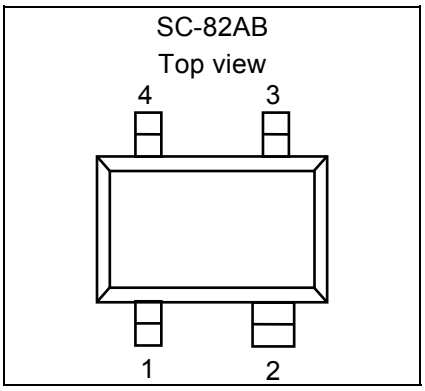

Figure 4

Table 7

Pin No.	Pin name	Pin description
1	OUT	Voltage detection output pin
2	VDD	Voltage input pin
3	NC*1	No connection
4	VSS	GND pin

***1.** The NC pin is electrically open.
The NC pin can be connected to VDD or VSS.

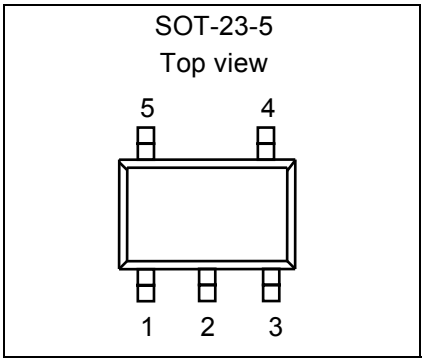

Figure 5

Table 8

Pin No.	Pin name	Pin description
1	OUT	Voltage detection output pin
2	VDD	Voltage input pin
3	VSS	GND pin
4	NC*1	No connection
5	NC*1	No connection

***1.** The NC pin is electrically open.
The NC pin can be connected to VDD or VSS.

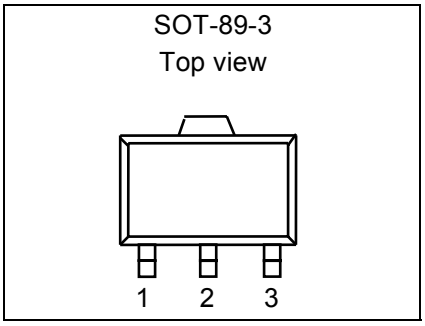

Figure 6

Table 9

Pin No.	Pin name	Pin description
1	OUT	Voltage detection output pin
2	VDD	Voltage input pin
3	VSS	GND pin

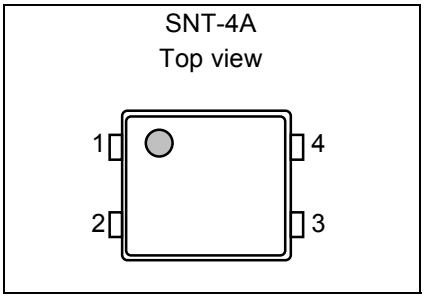

Figure 7

Table10

Pin No.	Pin name	Pin description
1	OUT	Voltage detection output pin
2	VSS	GND pin
3	NC*1	No connection
4	VDD	Voltage input pin

***1.** The NC pin is electrically open.
The NC pin can be connected to VDD or VSS.

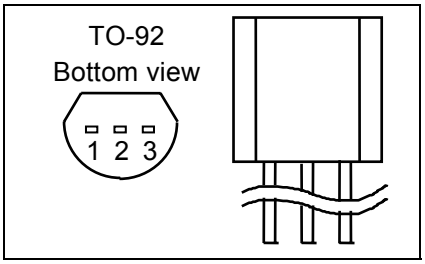

Figure 8

Table 11

Pin No.	Pin name	Pin description
1	OUT	Voltage detection output pin
2	VDD	Voltage input pin
3	VSS	GND pin

■ Absolute Maximum Ratings

1. Detection Voltage Typ. 1.4 V or Less Products

Table 12

(Ta=25°C unless otherwise specified)

Item		Symbol		Absolute maximum ratings	Unit
Power supply voltage		V_{DD}–V_{SS}		7	V
Output voltage	Nch open-drain output products	V_{OUT}		V_{SS}–0.3 to V_{SS}+7	
	CMOS output products			V_{SS}–0.3 to V_{DD}+0.3	
Output current		I_{OUT}		50	mA
Power dissipation		P_D	SC-82AB	150	mW
			SNT-4A	140	
Operating ambient temperature		Topr		–40 to +85	°C
Storage temperature		Tstg		–40 to +125	

Caution The absolute maximum ratings are rated values exceeding which the product could suffer physical damage. These values must therefore not be exceeded under any conditions.

2. Detection Voltage Typ. 1.5 V or More Products

Table 13

(Ta=25°C unless otherwise specified)

Item		Symbol		Absolute maximum ratings	Unit
Power supply voltage		V_{DD}–V_{SS}		12	V
Output voltage	Nch open-drain output products	V_{OUT}		V_{SS}–0.3 to V_{SS}+12	
	CMOS output products			V_{SS}–0.3 to V_{DD}+0.3	
Output current		I_{OUT}		50	mA
Power dissipation		P_D	SC-82AB	150	mW
			SOT-23-5	250	
			SOT-89-3	500	
			SNT-4A	140	
			TO-92	400	
Operating ambient temperature		Topr		–40 to +85	°C
Storage temperature		Tstg		–40 to +125	

Caution The absolute maximum ratings are rated values exceeding which the product could suffer physical damage. These values must therefore not be exceeded under any conditions.

■ Electrical Characteristics

1. Nch Open-drain Output Products

1-1. Detection Voltage Typ.1.4 V or Less Products

Table 14

(Ta=25°C unless otherwise specified)

Item	Symbol	Condition		Min.	Typ.	Max.	Unit	Test circuit
Detection voltage*1	$-V_{DET}$	—		$-V_{DET(S)}$ ×0.98	$-V_{DET(S)}$	$-V_{DET(S)}$ ×1.02	V	1
Release voltage	$+V_{DET}$		S-80808	0.802	0.834	0.867		
			S-80809	0.910	0.944	0.979		
			S-80810	1.017	1.054	1.091		
			S-80811	1.125	1.164	1.203		
			S-80812	1.232	1.273	1.315		
			S-80813	1.340	1.383	1.427		
			S-80814	1.448	1.493	1.538		
Hysteresis width	V_{HYS}		S-80808	0.018	0.034	0.051		
			S-80809	0.028	0.044	0.061		
			S-80810	0.037	0.054	0.071		
			S-80811	0.047	0.064	0.081		
			S-80812	0.056	0.073	0.091		
			S-80813	0.066	0.083	0.101		
			S-80814	0.076	0.093	0.110		
Current consumption	I_{SS}	V_{DD}=1.5 V	S-80808 to 09	—	1.3	3.5	μA	2
		V_{DD}=2.0 V	S-80810 to 14	—	1.3	3.5		
Operating voltage	V_{DD}	—		0.65	—	5.0	V	1
Output current	I_{OUT}	Output transistor, Nch, V_{DS}=0.5 V, V_{DD}=0.7 V		0.04	0.2	—	mA	3
Leakage current	I_{LEAK}	Output transistor, Nch, V_{DS}=5.0 V, V_{DD}=5.0 V		—	—	60	nA	
Response time	t_{PLH}	—		—	—	60	μs	1
Detection voltage temperature coefficient*2	$\frac{\Delta -V_{DET}}{\Delta Ta \bullet -V_{DET}}$	Ta=–40 °C to +85 °C		—	±100	±350	ppm/°C	

***1.** $-V_{DET}$: Actual detection voltage value, $-V_{DET(S)}$: Specified detection voltage value (The center value of the detection voltage range in **Table 1 to 2**.)

***2.** The temperature change ratio in the detection voltage [mV/°C] is calculated by using the following equation.

$$\frac{\Delta -V_{DET}}{\Delta Ta}\left[mV/°C\right]^{*1} = -V_{DET(S)}(Typ.)\left[V\right]^{*2} \times \frac{\Delta -V_{DET}}{\Delta Ta \bullet -V_{DET}}\left[ppm/°C\right]^{*3} \div 1000$$

***1.** Temperature change ratio of the detection voltage
***2.** Specified detection voltage
***3.** Detection voltage temperature coefficient

1-2. Detection Voltage Typ.1.5 V or More Products

Table 15

(Ta=25°C unless otherwise specified)

Item	Symbol	Condition		Min.	Typ.	Max.	Unit	Test circuit
Detection voltage*1	$-V_{DET}$	—		$-V_{DET(S)} \times 0.98$	$-V_{DET(S)}$	$-V_{DET(S)} \times 1.02$	V	1
Hysteresis width	V_{HYS}	—		$-V_{DET} \times 0.03$	$-V_{DET} \times 0.05$	$-V_{DET} \times 0.08$		
Current consumption	I_{SS}	V_{DD}=3.5 V	S-80815 to 26	—	0.8	2.4	μA	2
		V_{DD}=4.5 V	S-80827 to 39	—	0.8	2.4		
		V_{DD}=6.0 V	S-80840 to 56	—	0.9	2.7		
		V_{DD}=7.5 V	S-80857 to 60	—	0.9	2.7		
Operating voltage	V_{DD}	—		0.95	—	10.0	V	1
Output current	I_{OUT}	Output transistor, Nch, V_{DS}=0.5 V	V_{DD}=1.2 V S-80815 to 60	0.59	1.36	—	mA	3
			V_{DD}=2.4 V S-80827 to 60	2.88	4.98	—		
Leakage current	I_{LEAK}	Output transistor, Nch, V_{DS}=10.0 V, V_{DD}=10.0 V		—	—	100	nA	
Response time	t_{PLH}	—		—	—	60	μs	1
Detection voltage temperature coefficient*2	$\frac{\Delta -V_{DET}}{\Delta Ta \bullet -V_{DET}}$	Ta=–40 °C to +85 °C		—	±100	±350	ppm/°C	

***1.** $-V_{DET}$: Actual detection voltage value, $-V_{DET(S)}$: Specified detection voltage value (The center value of the detection voltage range in **Table 1 to 2**.)

***2.** The temperature change ratio in the detection voltage [mV/°C] is calculated by using the following equation.

$$\frac{\Delta -V_{DET}}{\Delta Ta}\left[mV/°C\right]^{*1} = -V_{DET(S)}(Typ.)\left[V\right]^{*2} \times \frac{\Delta -V_{DET}}{\Delta Ta \bullet -V_{DET}}\left[ppm/°C\right]^{*3} \div 1000$$

***1.** Temperature change ratio of the detection voltage

***2.** Specified detection voltage

***3.** Detection voltage temperature coefficient

2. CMOS Output Products

2-1. Detection Voltage Typ.1.4 V or Less Products

Table 16

(Ta=25°C unless otherwise specified)

Item	Symbol	Condition		Min.	Typ.	Max.	Unit	Test circuit
Detection voltage*1	$-V_{DET}$	—		$-V_{DET(S)} \times 0.98$	$-V_{DET(S)}$	$-V_{DET(S)} \times 1.02$	V	1
Release voltage	$+V_{DET}$		S-80808	0.802	0.834	0.867		
			S-80809	0.910	0.944	0.979		
			S-80810	1.017	1.054	1.091		
			S-80811	1.125	1.164	1.203		
			S-80812	1.232	1.273	1.315		
			S-80813	1.340	1.383	1.427		
			S-80814	1.448	1.493	1.538		
Hysteresis width	V_{HYS}		S-80808	0.018	0.034	0.051		
			S-80809	0.028	0.044	0.061		
			S-80810	0.037	0.054	0.071		
			S-80811	0.047	0.064	0.081		
			S-80812	0.056	0.073	0.091		
			S-80813	0.066	0.083	0.101		
			S-80814	0.076	0.093	0.110		
Current consumption	I_{SS}	V_{DD}=1.5 V	S-80808 to 09	—	1.3	3.5	μA	2
		V_{DD}=2.0 V	S-80810 to 14	—	1.3	3.5		
Operating voltage	V_{DD}	—		0.65	—	5.0	V	1
Output current	I_{OUT}	Output transistor, Nch, V_{DS}=0.5 V, V_{DD}=0.7 V		0.04	0.2	—	mA	3
		Output transistor, Pch, V_{DS}=2.1 V, V_{DD}=4.5 V		2.9	5.8	—		4
Response time	t_{PLH}	—		—	—	60	μs	1
Detection voltage temperature coefficient*2	$\frac{\Delta -V_{DET}}{\Delta Ta \bullet -V_{DET}}$	Ta=–40 °C to +85 °C		—	±100	±350	ppm/°C	

***1.** $-V_{DET}$: Actual detection voltage value, $-V_{DET(S)}$: Specified detection voltage value (The center value of the detection voltage range in **Table 3 to 4**.)

***2.** The temperature change ratio in the detection voltage [mV/°C] is calculated by using the following equation.

$$\frac{\Delta -V_{DET}}{\Delta Ta}\,[\text{mV/°C}]^{*1} = -V_{DET(S)}(\text{Typ.})\,[\text{V}]^{*2} \times \frac{\Delta -V_{DET}}{\Delta Ta \bullet -V_{DET}}\,[\text{ppm/°C}]^{*3} \div 1000$$

***1.** Temperature change ratio of the detection voltage
***2.** Specified detection voltage
***3.** Detection voltage temperature coefficient

2-2. Detection Voltage Typ.1.5 V or More Products

Table 17

(Ta=25°C unless otherwise specified)

Item	Symbol	Condition		Min.	Typ.	Max.	Unit	Test circuit
Detection voltage*1	$-V_{DET}$	—		$-V_{DET(S)}$ ×0.98	$-V_{DET(S)}$	$-V_{DET(S)}$ ×1.02	V	1
Hysteresis width	V_{HYS}	—		$-V_{DET}$ ×0.03	$-V_{DET}$ ×0.05	$-V_{DET}$ ×0.08		
Current consumption	I_{SS}	V_{DD}=3.5 V	S-80815 to 26	—	0.8	2.4	μA	2
		V_{DD}=4.5 V	S-80827 to 39	—	0.8	2.4		
		V_{DD}=6.0 V	S-80840 to 56	—	0.9	2.7		
		V_{DD}=7.5 V	S-80857 to 60	—	0.9	2.7		
Operating voltage	V_{DD}	—		0.95	—	10.0	V	1
Output current	I_{OUT}	Output transistor, Nch, V_{DS}=0.5 V	V_{DD}=1.2 V S-80815 to 60	0.59	1.36	—	mA	3
			V_{DD}=2.4 V S-80827 to 60	2.88	4.98	—		
		Output transistor, Pch, V_{DS}=0.5 V	V_{DD}=4.8 V S-80815 to 39	1.43	2.39	—		4
			V_{DD}=6.0 V S-80840 to 56	1.68	2.78	—		
			V_{DD}=8.4 V S-80857 to 60	2.08	3.42	—		
Response time	t_{PLH}	—		—	—	60	μs	1
Detection voltage temperature coefficient*2	$\frac{\Delta -V_{DET}}{\Delta Ta \bullet -V_{DET}}$	Ta=–40 °C to +85 °C		—	±100	±350	ppm/°C	

***1.** $-V_{DET}$: Actual detection voltage value, $-V_{DET(S)}$: Specified detection voltage value (The center value of the detection voltage range in **Table 3 to 4**.)

***2.** The temperature change ratio in the detection voltage [mV/°C] is calculated by using the following equation.

$$\frac{\Delta -V_{DET}}{\Delta Ta}\left[mV/°C\right]^{*1} = -V_{DET(S)}(Typ.)\left[V\right]^{*2} \times \frac{\Delta -V_{DET}}{\Delta Ta \bullet -V_{DET}}\left[ppm/°C\right]^{*3} \div 1000$$

***1.** Temperature change ratio of the detection voltage

***2.** Specified detection voltage

***3.** Detection voltage temperature coefficient

■ Test Circuits

1.

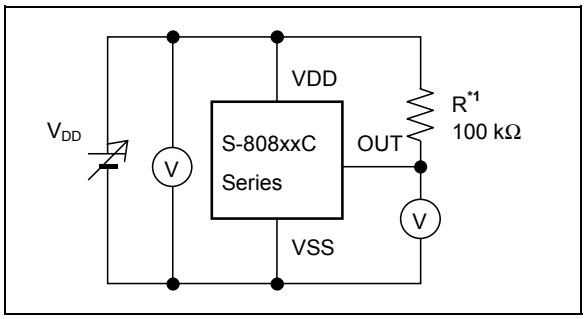

*1. R is unnecessary for CMOS output products.

Figure 9

2.

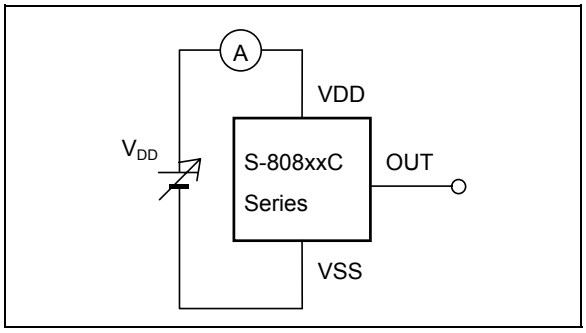

Figure 10

3.

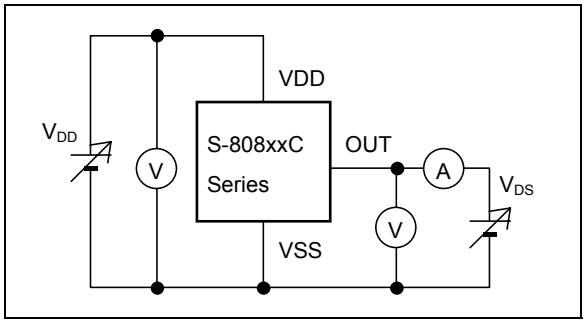

Figure 11

4.

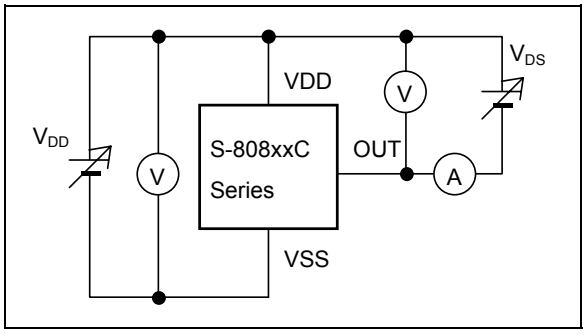

Figure 12

■ Timing Chart

1. Nch Open-drain Output Products

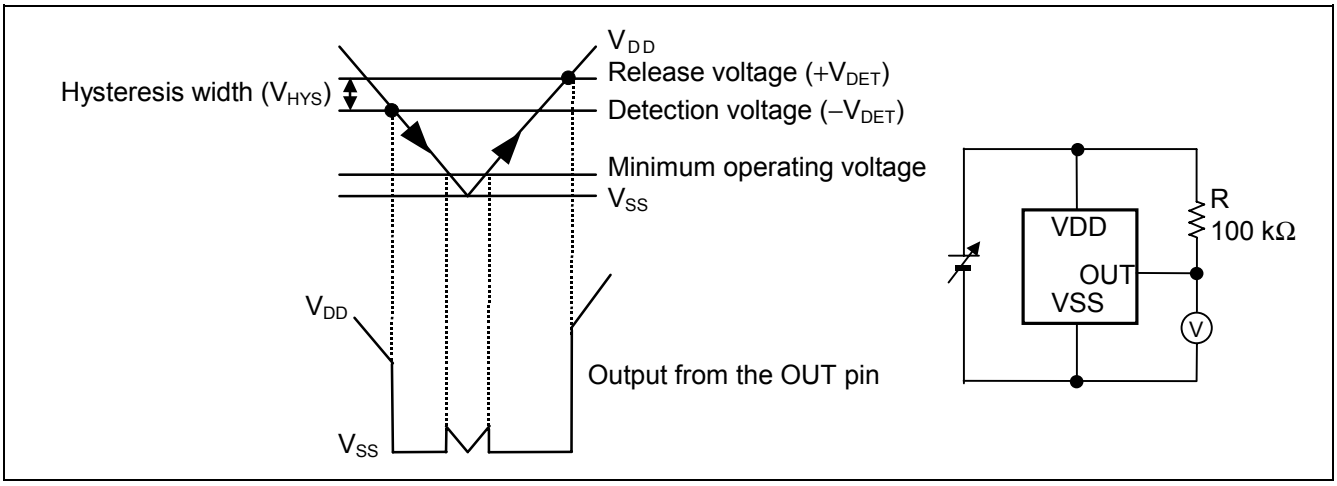

Figure 13

2. CMOS Output Products

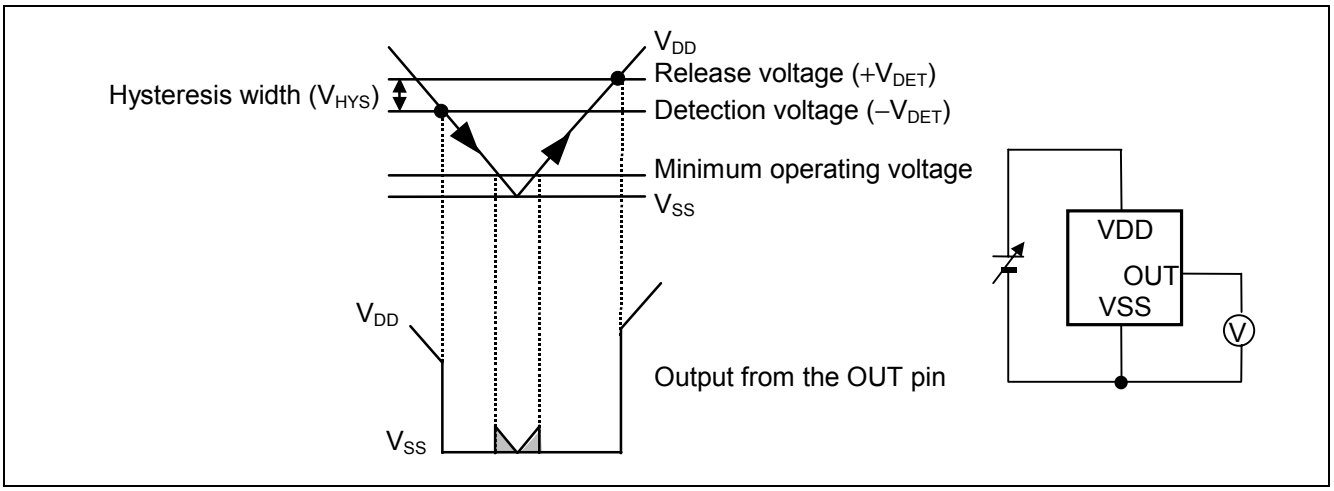

Remark For values of V_{DD} less than minimum operating voltage, values of OUT terminal output is free in the shaded region.

Figure 14

■ Operation

1. Basic Operation: CMOS Output (Active Low)

1-1. When the power supply voltage (V_{DD}) is higher than the release voltage ($+V_{DET}$), the Nch transistor is OFF and the Pch transistor is ON to provide V_{DD} (high) at the output. Since the Nch transistor N1 in **Figure 15** is OFF, the comparator input voltage is $\frac{(R_B + R_C) \bullet V_{DD}}{R_A + R_B + R_C}$.

1-2. When the V_{DD} goes below $+V_{DET}$, the output provides the V_{DD} level, as long as the V_{DD} remains above the detection voltage $-V_{DET}$. When the V_{DD} falls below $-V_{DET}$ (point A in **Figure 16**), the Nch transistor becomes ON, the Pch transistor becomes OFF, and the V_{SS} level appears at the output. At this time the Nch transistor N1 in **Figure 15** becomes ON, the comparator input voltage is changed to $\frac{R_B \bullet V_{DD}}{R_A + R_B}$.

1-3. When the V_{DD} falls below the minimum operating voltage, the output becomes undefined, or goes to the V_{DD} when the output is pulled up to the V_{DD}.

1-4. The V_{SS} level appears when the V_{DD} rises above the minimum operating voltage. The V_{SS} level still appears even when the V_{DD} surpasses $-V_{DET}$, as long as it does not exceed the release voltage $+V_{DET}$.

1-5. When the V_{DD} rises above $+V_{DET}$ (point B in **Figure 16**), the Nch transistor becomes OFF and the Pch transistor becomes ON to provide V_{DD} level at the output.

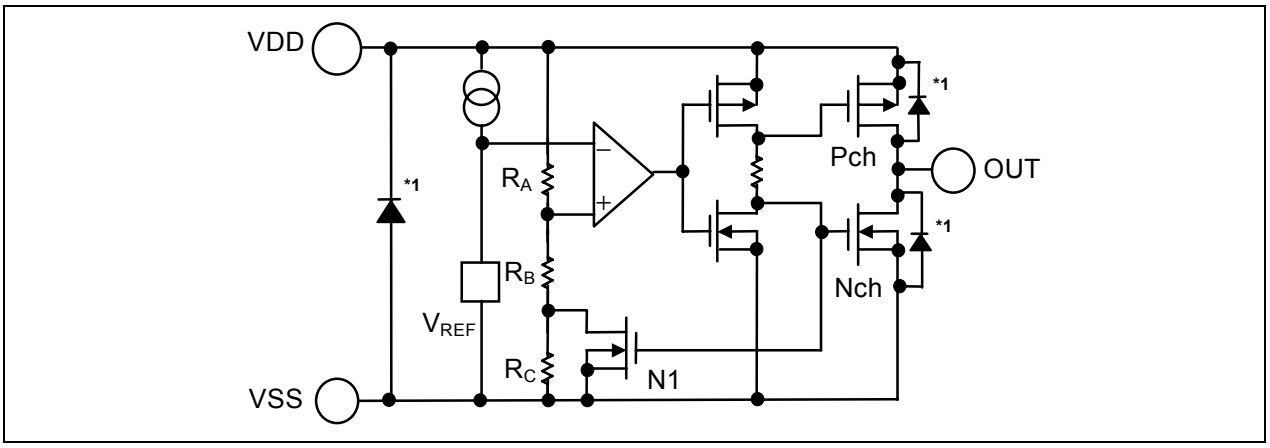

***1.** Parasiteic diode

Figure 15 Operation 1

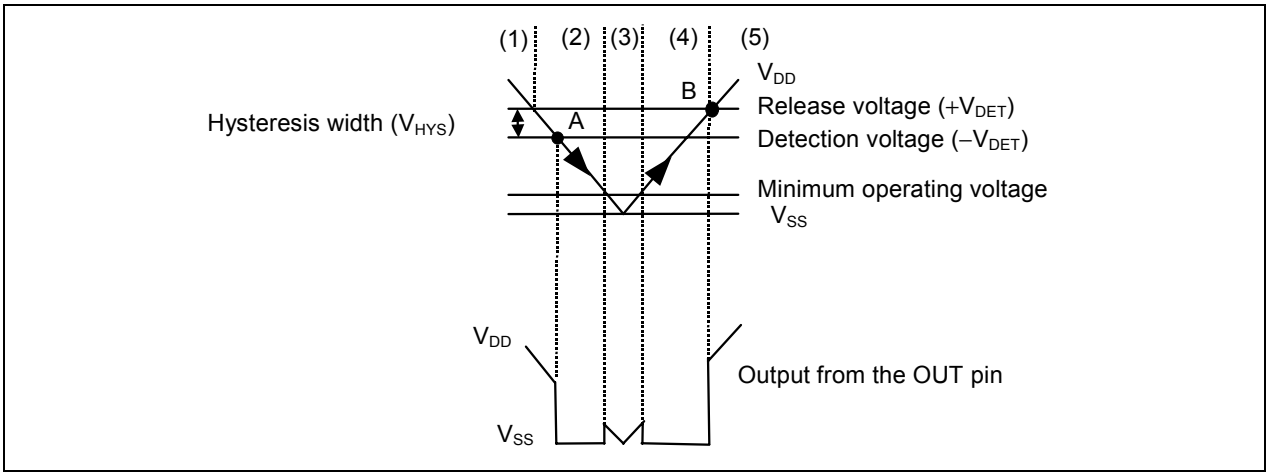

Figure 16 Operation 2

2. Other Characteristics

2-1. Temperature Characteristics of Detection Voltage

The shaded area in **Figure 17** shows the temperature characteristics of the detection voltage.

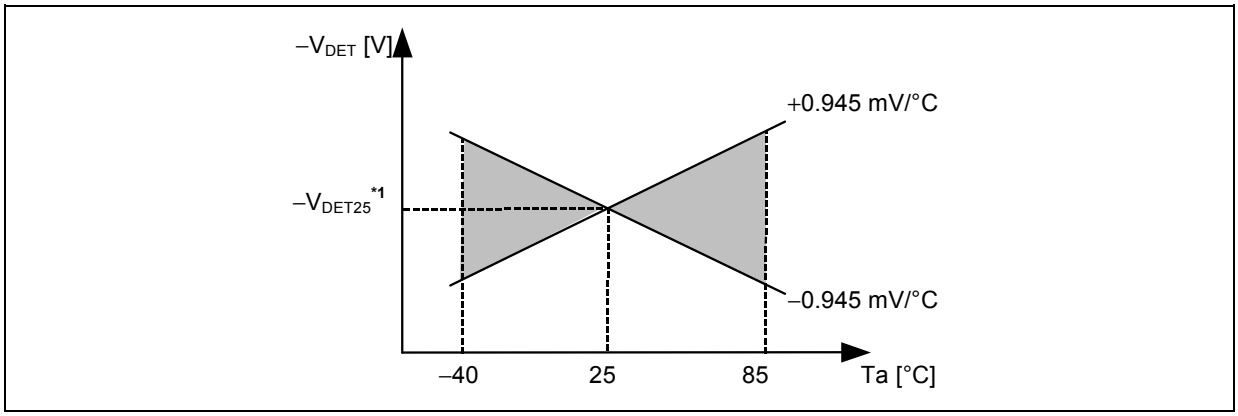

***1.** $-V_{DET25}$ is an actual detection voltage value at 25°C.

Figure 17 Temperature Characteristics of Detection Voltage (Example for S-80827C)

2-2. Temperature Characteristics of Release Voltage

The temperature coefficient $\frac{\Delta + V_{DET}}{\Delta Ta}$ for the release voltage is calculated by the temperature coefficient $\frac{\Delta - V_{DET}}{\Delta Ta}$ of the detection voltage as follows:

$$\frac{\Delta + V_{DET}}{\Delta Ta} = \frac{+V_{DET}}{-V_{DET}} \times \frac{\Delta - V_{DET}}{\Delta Ta}$$

The temperature coefficients for the release voltage and the detection voltage have the same sign consequently.

2-3. Temperature Characteristics of Hysteresis Voltage

The temperature characteristics for the hysteresis voltage is expressed as $\frac{\Delta + V_{DET}}{\Delta Ta} - \frac{\Delta - V_{DET}}{\Delta Ta}$ and is calculated as follows:

$$\frac{\Delta + V_{DET}}{\Delta Ta} - \frac{\Delta - V_{DET}}{\Delta Ta} = \frac{V_{HYS}}{-V_{DET}} \times \frac{\Delta - V_{DET}}{\Delta Ta}$$

■ Standard Circuit

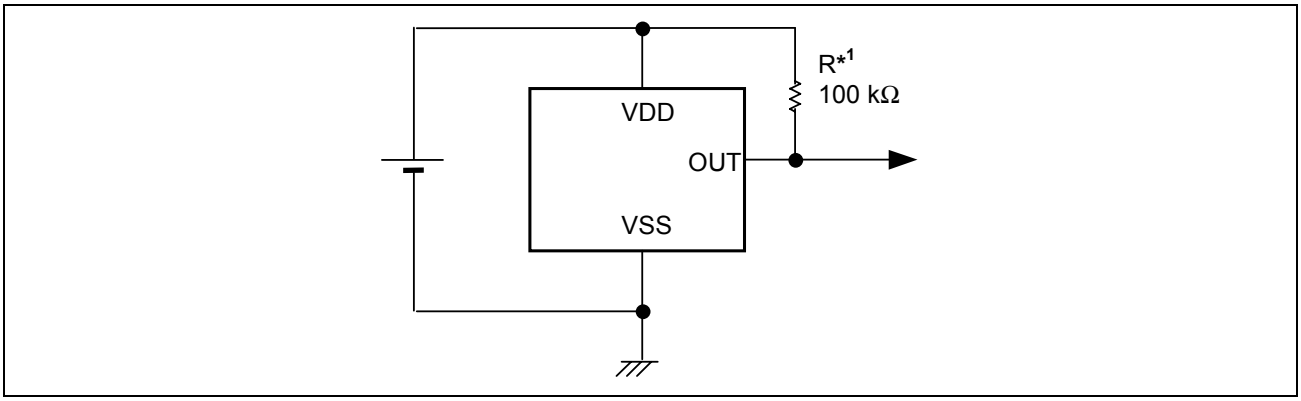

*1. R is unnecessary for CMOS output products.

Figure 18

Caution The above connection diagram and constants do not guarantee correct operation. Perform sufficient evaluation using the actual application to set the constants.

■ Technical Terms

1. Detection Voltage ($-V_{DET}$), Release Voltage ($+V_{DET}$)

The detection voltage ($-V_{DET}$) is a voltage at which the output turns to low. The detection voltage varies slightly among products of the same specification. The variation of detection voltage between the specified minimum ($-V_{DET}$) Min. and the maximum ($-V_{DET}$) Max. is called the detection voltage range (Refer to **Figure 19**).

Example: For the S-80815CN, the detection voltage lies in the range of $1.470 \leq (-V_{DET}) \leq 1.530$.
This means that some S-80815CNs have 1.470 V for $-V_{DET}$ and some have 1.530 V.

The release voltage ($+V_{DET}$) is a voltage at which the output turns to high. The release voltage varies slightly among products of the same specification. The variation of release voltages between the specified minimum ($+V_{DET}$) Min. and the maximum ($+V_{DET}$) Max. is called the release voltage range (Refer to **Figure 20**). The range is calculed from the actual detection voltage ($-V_{DET}$) of a product and is expressed by $-V_{DET} \times 1.03 \leq +V_{DET} \leq -V_{DET} \times 1.08$.

Example: For the S-80815CN, the release voltage lies in the range of $1.514 \leq (+V_{DET}) \leq 1.652$.
This means that some S-80815CNs have 1.514 V for $+V_{DET}$ and some have 1.652 V.

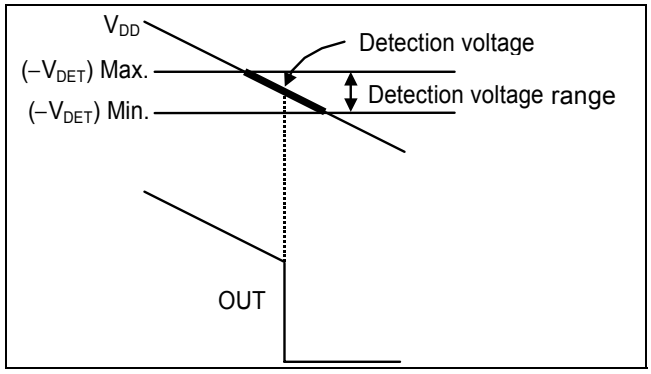

Figure 19 Detection Voltage (CMOS Output Products)

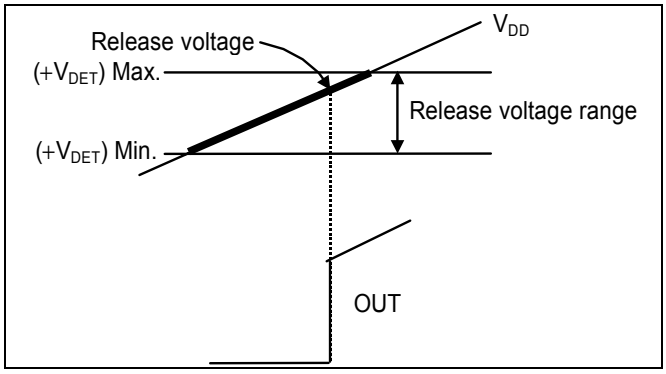

Figure 20 Release Voltage (CMOS Output Products)

Remark Although the detection voltage and release voltage overlap in the range of 1.514 V to 1.530 V, $+V_{DET}$ is always larger than $-V_{DET}$.

2. Hysteresis Width (V_{HYS})

The hysteresis width is the voltage difference between the detection voltage and the release voltage (The voltage at point B −The voltage at point A $=V_{HYS}$ in **Figure 16**). The existence of the hysteresis width prevents malfunction caused by noise on input signal.

3. Through-type Current

The through-type current refers to the current that flows instantaneously at the time of detection and release of a voltage detector. The through-type current is large in CMOS output products, small in Nch open-drain output products.

4. Oscillation

In applications where a resistor is connected to the voltage detector input (**Figure 13**), taking a CMOS active low product for example, the through-type current which is generated when the output goes from low to high (release) causes a voltage drop equal to [through-type current]×[input resistance] across the resistor. When the input voltage drops below the detection voltage ($-V_{DET}$) as a result, the output voltage goes to low level. In this state, the through-type current stops and its resultant voltage drop disappears, and the output goes from low to high. A through-type current is again generated, a voltage drop appears, and repeating the process finally induces oscillation.

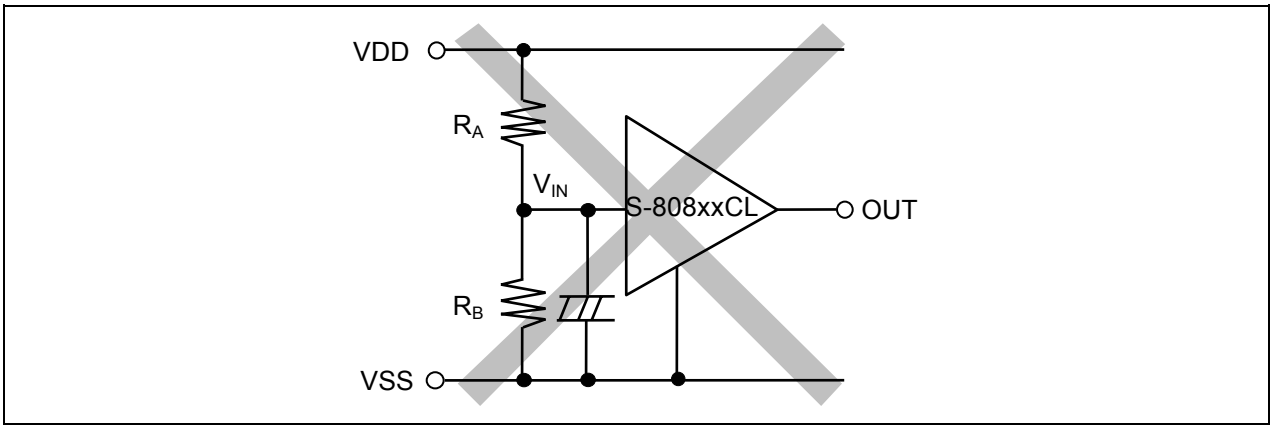

Figure 21 An Example for Bad Implementation of Input Voltage Divider

■ Electrical Characteristics for Customized Products

1. S-80824KNUA-D2B-T2, S-80824KNY-x

Table 18

(Ta=25°C unless otherwise specified)

Item	Symbol	Condition		Min.	Typ.	Max.	Unit	Test circuit
Detection voltage[*1]	$-V_{DET}$	—		2.295	2.400[*2]	2.505	V	1
Release voltage	$+V_{DET}$	—		4.300	4.400	4.500		
Current consumption	I_{SS}	V_{DD}=6.0 V		—	0.8	2.4	μA	2
Operating voltage	V_{DD}	—		0.95	—	10.0	V	1
Output current	I_{OUT}	Output transistor, Nch, V_{DS}=0.5 V	V_{DD}=0.95 V	0.03	0.24	—	mA	3
			V_{DD}=1.2 V	0.23	0.50	—		
Leakage current	I_{LEAK}	Output transistor, Nch, V_{DD}=10.0 V, V_{DS}=10.0 V		—	—	0.1	μA	
Response time	t_{PLH}	—		—	—	60	μs	1
Detection voltage temperature coefficient[*3]	$\frac{\Delta -V_{DET}}{\Delta Ta \bullet -V_{DET}}$	Ta=–40°C to 85°C		—	±100	±350	ppm/°C	

***1.** $-V_{DET}$: Actual detection voltage value

***2.** Specified detection voltage value ($-V_{DET(S)}$)

***3.** The temperature change ratio in the detection voltage [mV/°C] is calculated by using the following equation.

$$\frac{\Delta -V_{DET}}{\Delta Ta}\left[mV/°C\right]^{*1} = -V_{DET(S)}(Typ.)\left[V\right]^{*2} \times \frac{\Delta -V_{DET}}{\Delta Ta \bullet -V_{DET}}\left[ppm/°C\right]^{*3} \div 1000$$

***1.** Temperature change ratio of the detection voltage

***2.** Specified detection voltage

***3.** Detection voltage temperature coefficient

2. S-80844KLUA-D2A-T2, S-80844KLY-x

Table 19

(Ta=25°C unless otherwise specified)

Item	Symbol	Condition		Min.	Typ.	Max.	Unit	Test circuit
Detection voltage*1	$-V_{DET}$	—		4.295	4.450*2	4.605	V	1
Release voltage	$+V_{DET}$	—		—	—	4.700		
Current consumption	I_{SS}	V_{DD}=6.0 V		—	1.0	3.0	µA	2
Operating voltage	V_{DD}	—		0.95	—	10.0	V	1
Output current	I_{OUT}	Output transistor, Nch, V_{DS}=0.5 V	V_{DD}=1.2 V	0.23	0.50	—	mA	3
			V_{DD}=2.4 V	1.60	3.70	—		
		Output transistor, Pch, V_{DS}=0.5 V	V_{DD}=4.8 V	0.36	0.62	—		4
Response time	t_{PLH}	—		—	—	60	µs	1
Detection voltage temperature coefficient*3	$\frac{\Delta -V_{DET}}{\Delta Ta \bullet -V_{DET}}$	Ta=–40°C to 85°C		—	±100	±350	ppm/°C	

***1.** $-V_{DET}$: Actual detection voltage value

***2.** Specified detection voltage value ($-V_{DET(S)}$)

***3.** The temperature change ratio in the detection voltage [mV/°C] is calculated by using the following equation.

$$\frac{\Delta -V_{DET}}{\Delta Ta}[mV/°C]^{*1} = -V_{DET(S)}(Typ.)[V]^{*2} \times \frac{\Delta -V_{DET}}{\Delta Ta \bullet -V_{DET}}[ppm/°C]^{*3} \div 1000$$

***1.** Temperature change ratio of the detection voltage

***2.** Specified detection voltage

***3.** Detection voltage temperature coefficient

3. S-80846KNUA-D2C-T2, S-80846KNY-x

Table 20

(Ta=25°C unless otherwise specified)

Item	Symbol	Condition		Min.	Typ.	Max.	Unit	Test circuit
Detection voltage*1	$-V_{DET}$	—		4.500	4.600*2	4.700	V	1
Hysteresis width	V_{HYS}	—		—	0.05	0.10		
Current consumption	I_{SS}	V_{DD}=6.0 V		—	0.9	2.7	µA	2
Operating voltage	V_{DD}	—		0.95	—	10.0	V	1
Output current	I_{OUT}	Output transistor, Nch, V_{DS}=0.5 V	V_{DD}=1.2 V	0.59	1.36	—	mA	3
			V_{DD}=2.4 V	2.88	4.98	—		
Leakage current	I_{LEAK}	Output transistor, Nch, V_{DD}=10.0 V, V_{DS}=10.0 V		—	—	0.1	µA	
Response time	t_{PLH}	—		—	—	60	µs	1
Detection voltage temperature coefficient*3	$\frac{\Delta -V_{DET}}{\Delta Ta \bullet -V_{DET}}$	Ta=–40°C to 85°C		—	±100	±350	ppm/°C	

***1.** $-V_{DET}$: Actual detection voltage value

***2.** Specified detection voltage value ($-V_{DET(S)}$)

***3.** The temperature change ratio in the detection voltage [mV/°C] is calculated by using the following equation.

$$\frac{\Delta -V_{DET}}{\Delta Ta}[mV/°C]^{*1} = -V_{DET(S)}(Typ.)[V]^{*2} \times \frac{\Delta -V_{DET}}{\Delta Ta \bullet -V_{DET}}[ppm/°C]^{*3} \div 1000$$

***1.** Temperature change ratio of the detection voltage

***2.** Specified detection voltage

***3.** Detection voltage temperature coefficient

■ Precautions

- Do not apply an electrostatic discharge to this IC that exceeds the performance ratings of the built-in electrostatic protection circuit.
- In CMOS output products of the S-808xxC series, the through-type current flows at the detection and the release. If the input impedance is high, oscillation may occur due to the voltage drop by the through-type current during releasing.
- In CMOS output products oscillation may occur when a pull-down resistor is used, and falling speed of the power supply voltage (V_{DD}) is slow near the detection voltage.
- When designing for mass production using an application circuit described herein, the product deviation and temperature characteristics should be taken into consideration. SII shall not bear any responsibility for the products on the circuits described herein.
- SII claims no responsibility for any and all disputes arising out of or in connection with any infringement of the products including this IC upon patents owned by a third party.

■ Typical Characteristics (Typical Data)

1. Detection Voltage (V_{DET}) - Temperature (Ta)

S-80808CL

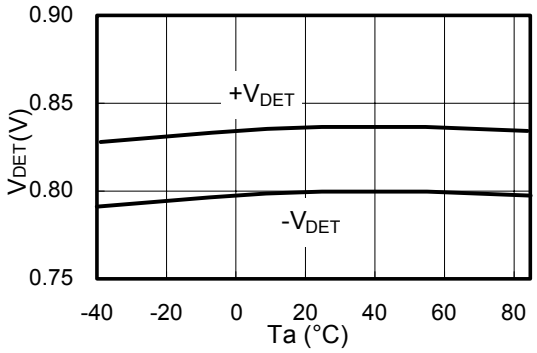

S-80814CL

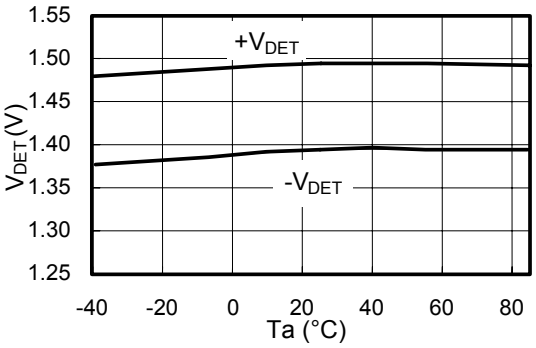

S-80815CL

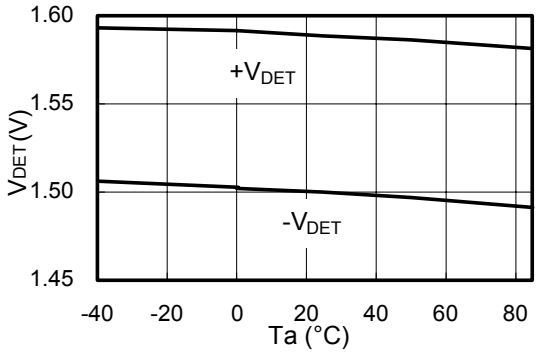

S-80860CL

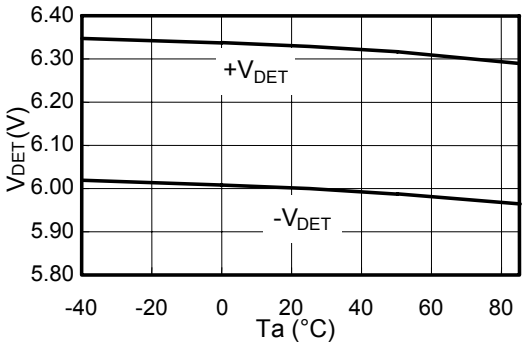

2. Hysteresis Voltage Width (V_{HYS}) - Temperature (Ta)

S-80808CL

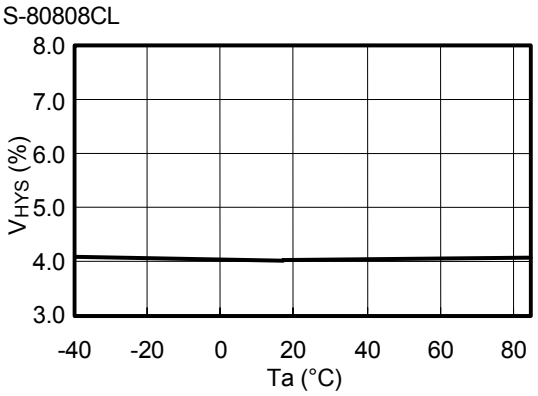

S-80814CL

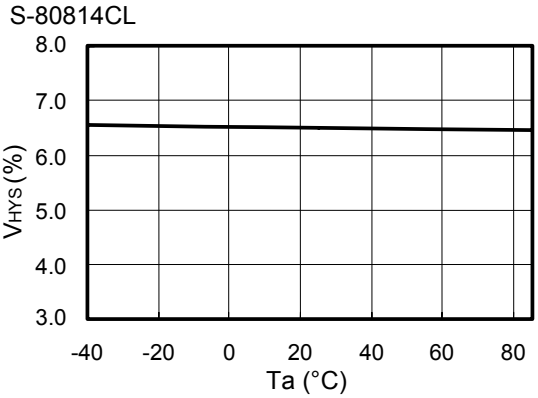

S-80815CL

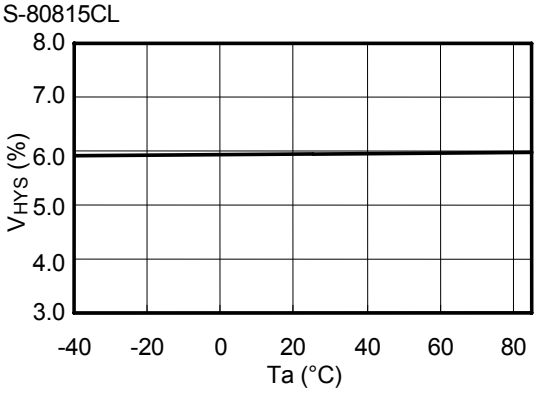

S-80860CL

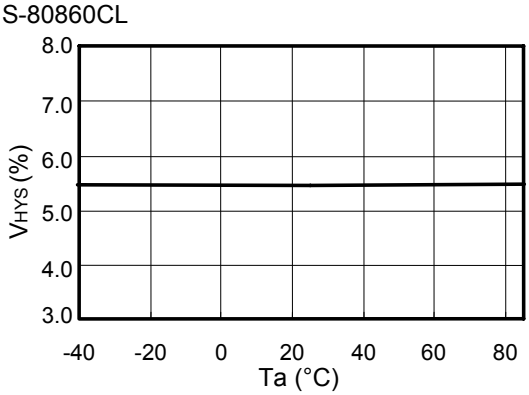

3. Current Consumption (I_{SS}) - Input Voltage (V_{DD})

S-80808CL Ta=25°C

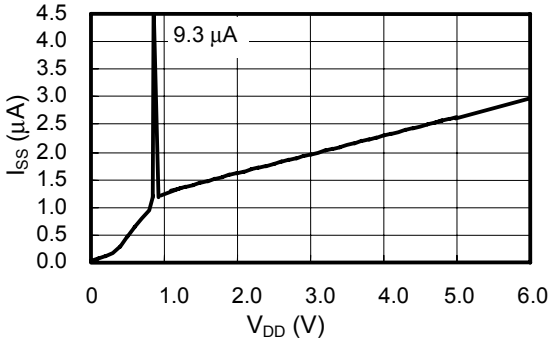

S-80814CL Ta=25°C

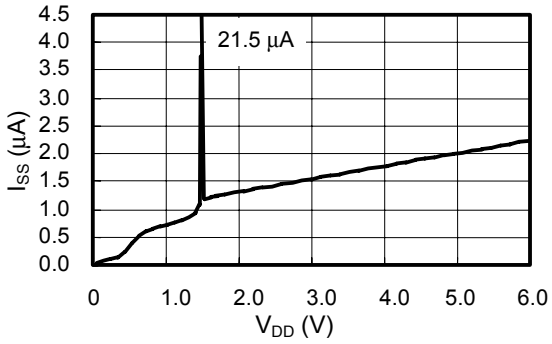

S-80815CL Ta=25°C

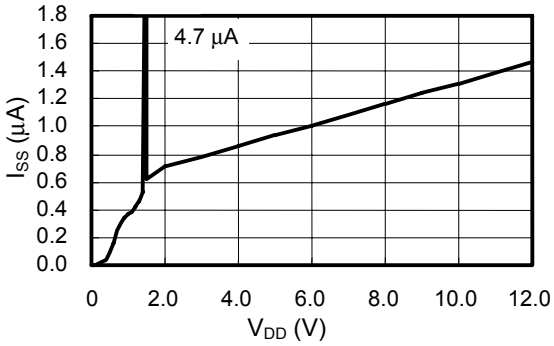

S-80860CL Ta=25°C

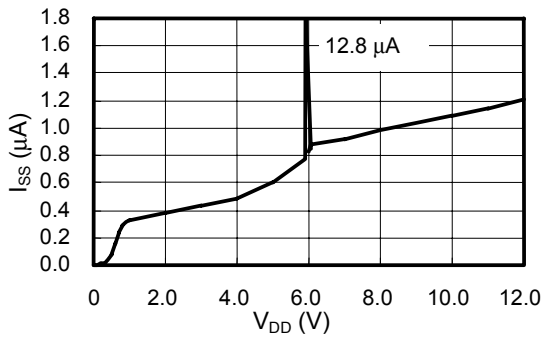

4. Current Consumption (I_{SS}) - Temperature (Ta)

S-80808CL V_{DD}=1.5 V

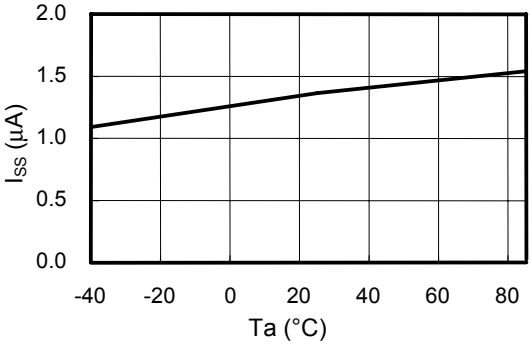

S-80814CL V_{DD}=2.0 V

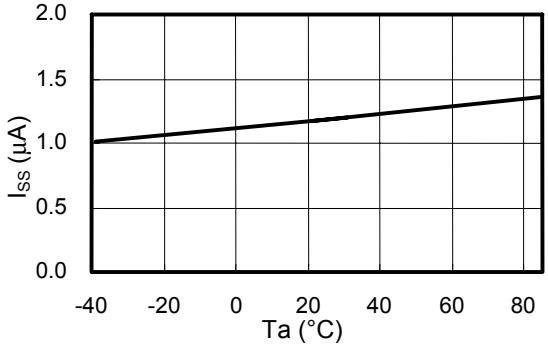

S-80815CL V_{DD}=3.5 V

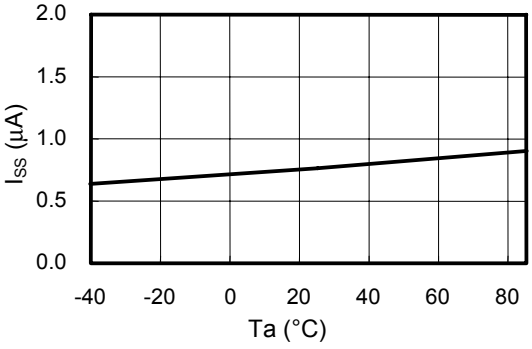

S-80860CL V_{DD}=7.5 V

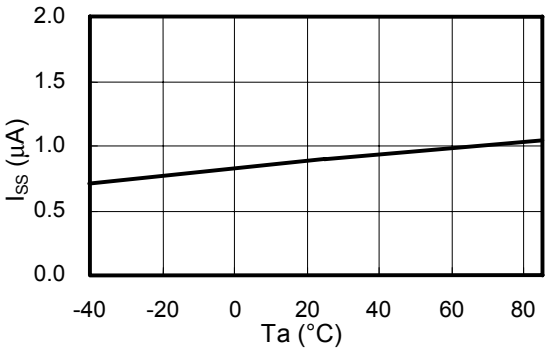

5. Nch Transistor Output Current (I_{OUT}) – V_{DS}

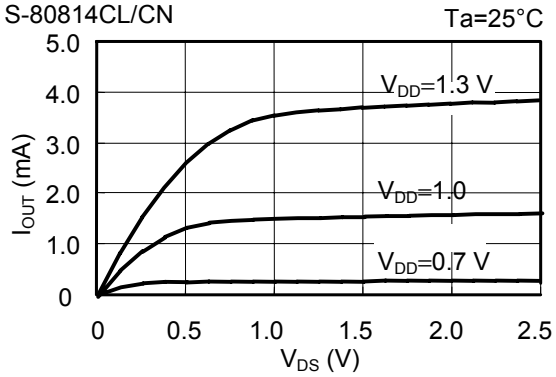

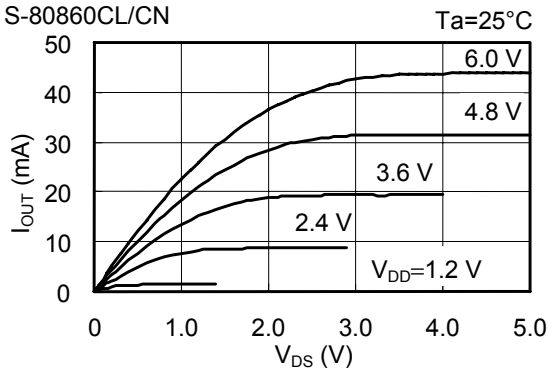

6. Pch Transistor Output Current (I_{OUT}) -V_{DS}

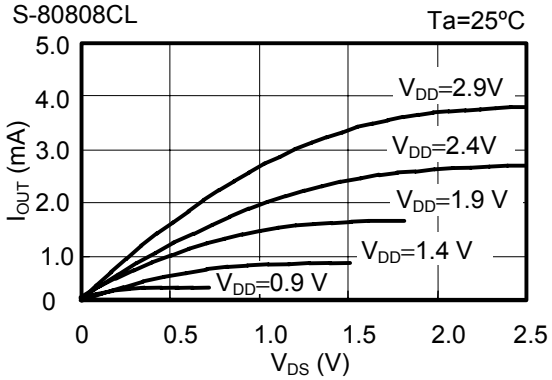

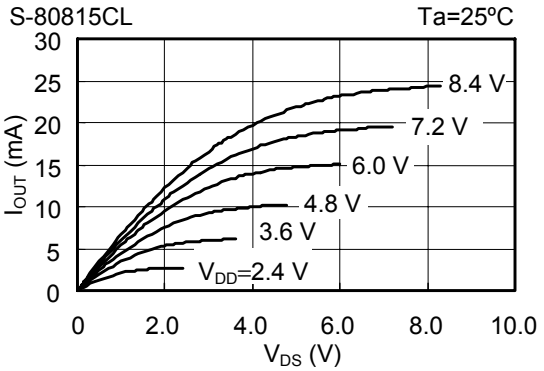

7. Nch Transistor Output Current (I_{OUT}) - Input Voltage (V_{DD})

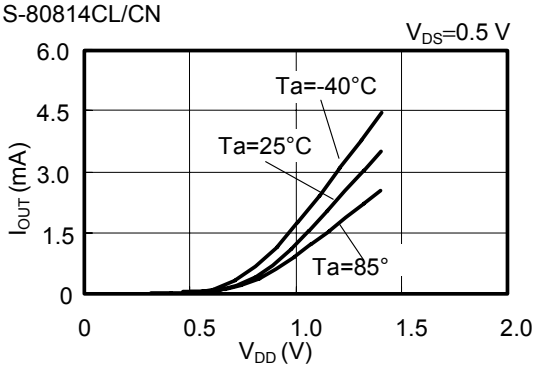

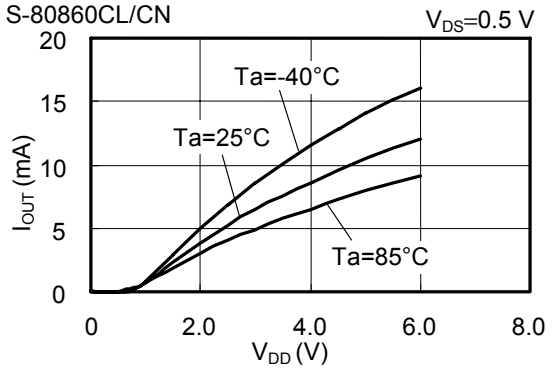

8. Pch Transistor Output Current (I_{OUT}) - Input Voltage (V_{DD})

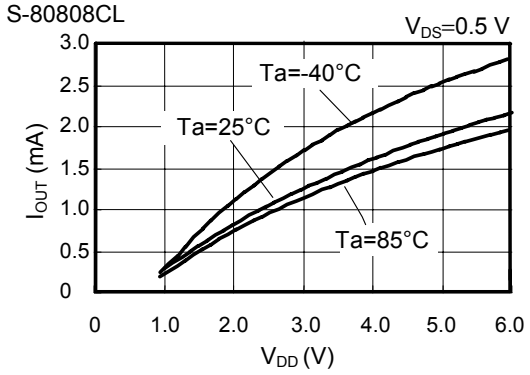

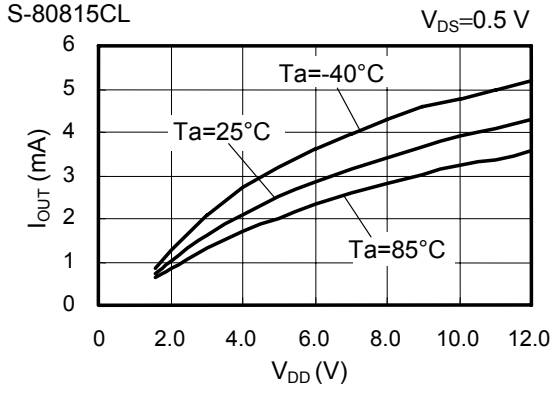

9. Minimum Operating Voltage - Input Voltage (V_{DD})

S-80808CN Pull-up to V_{DD} 100 kΩ

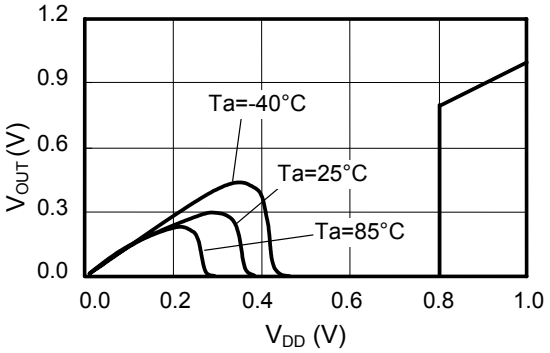

S-80808CN Pull-up to 3 V

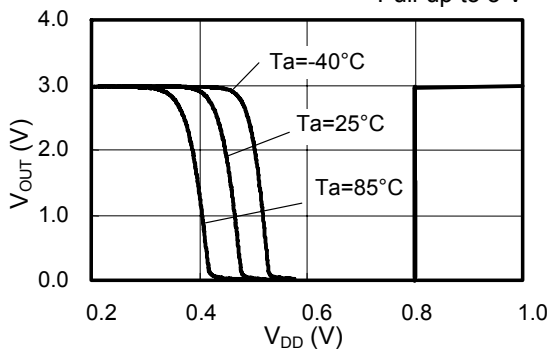

S-80815CN Pull-up to V_{DD} 100 kΩ

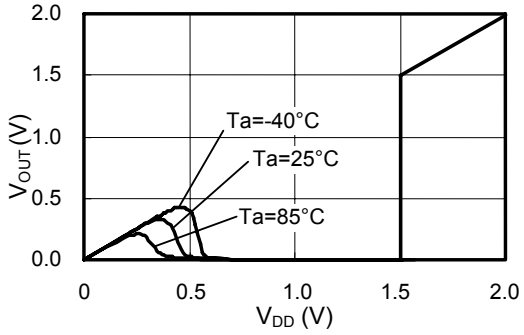

S-80815CN Pull-up to 3 V

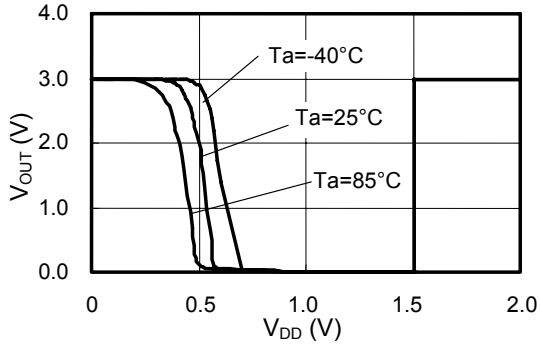

S-80808CN Pull-up to V_{DD}:100 kΩ

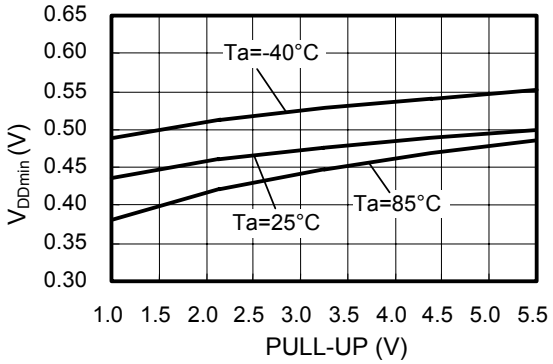

S-80815CN Pull-up to V_{DD}:100 kΩ

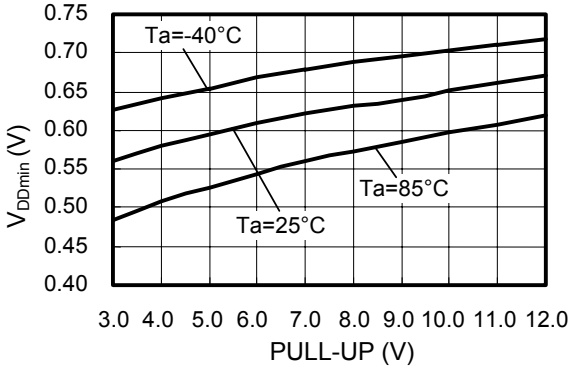

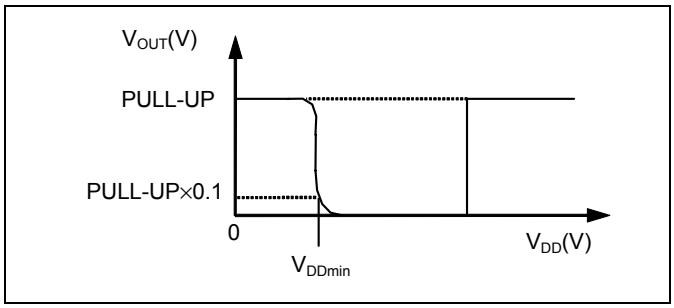

Remark $V_{DDmin.}$ is defined by the V_{DD} voltage at which V_{OUT} goes below 10 % of PULL-UP voltage when the V_{DD} increase from 0 V.

Figure 22

10. Dynamic Response - C_{OUT}

S-80808CL Ta=25°C

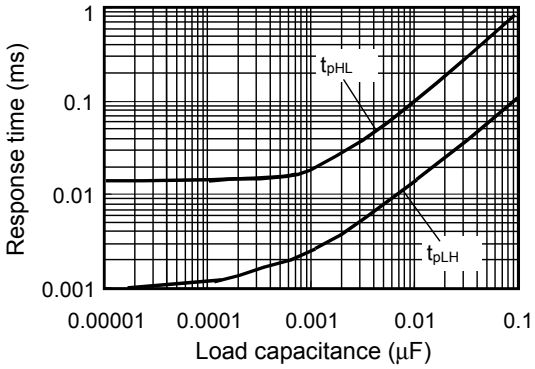

S-80808CN Ta=25°C

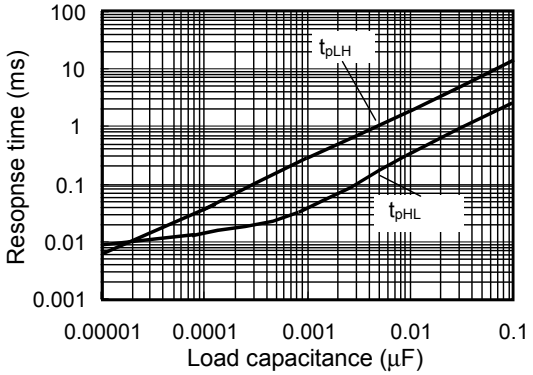

S-80814CL Ta=25°C

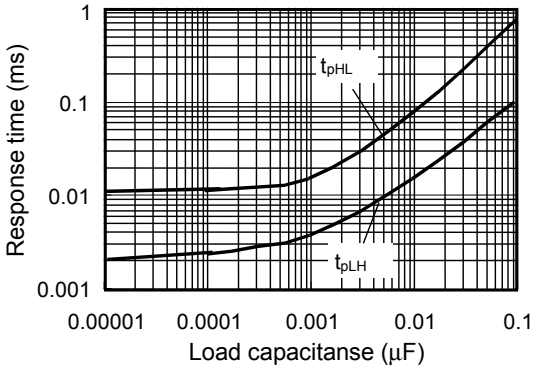

S-80814CN Ta=25°C

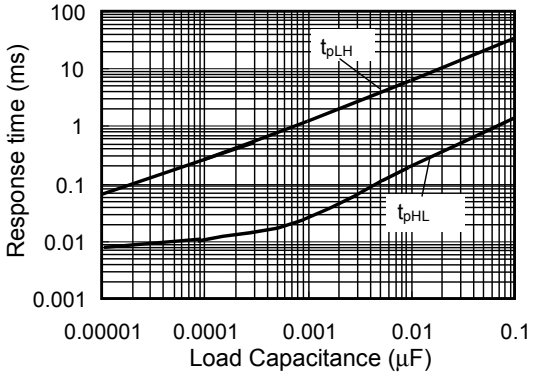

S-80815CL Ta=25°C

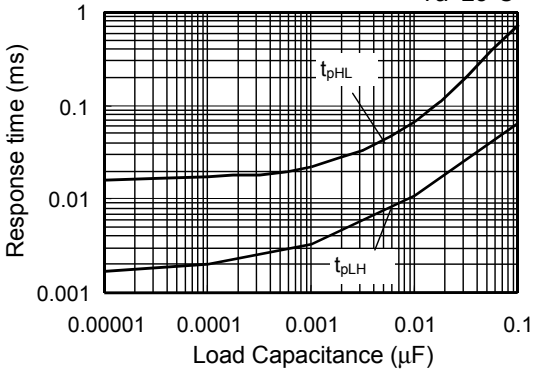

S-80815CN Ta=25°C

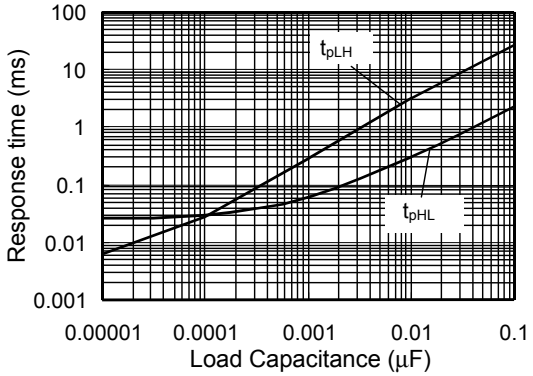

S-80860CL Ta=25°C

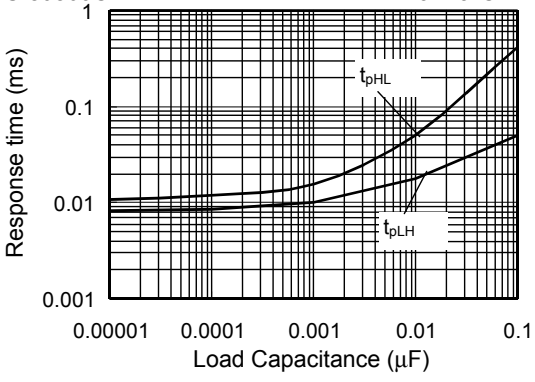

S-80860CN Ta=25°C

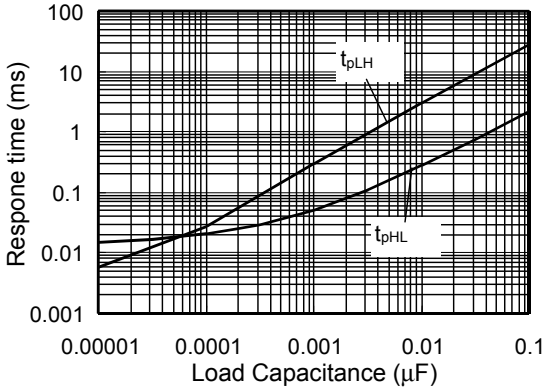

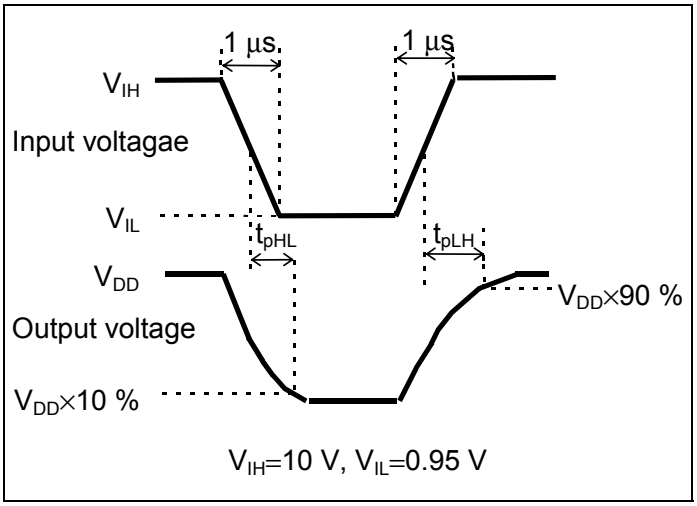

Figure 23 Measurement Condition for Response Time

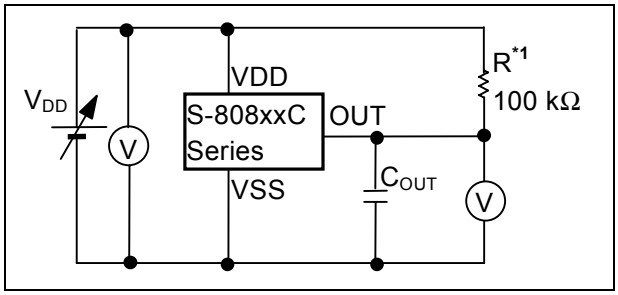

***1.** R is unnecessary for CMOS output products.

Figure 24 Measurement Circuit for Response Time

Caution The above connection diagram and constants do not guarantee correct operation. Perform sufficient evaluation using the actual application to set the constants.

■ Application Circuit Examples

1. Microcomputer Reset Circuits

If the power supply voltage to a microcomputer falls below the specified level, an unspecified operation may be performed or the contents of the memory register may be lost. When power supply voltage returns to normal, the microcomputer needs to be initialized before normal operations can be done. Reset circuits protect microcomputers in the event of current being momentarily switched off or lowered. Reset circuits shown in **Figures 25 to 26** can be easily constructed with the help of the S-808xxC series, that has low operating voltage, a high-precision detection voltage and hysteresis.

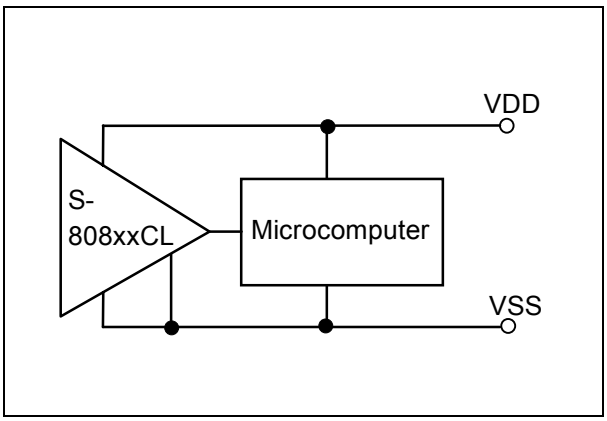

Figure 25 Reset Circuit Example(S-808xxCL)

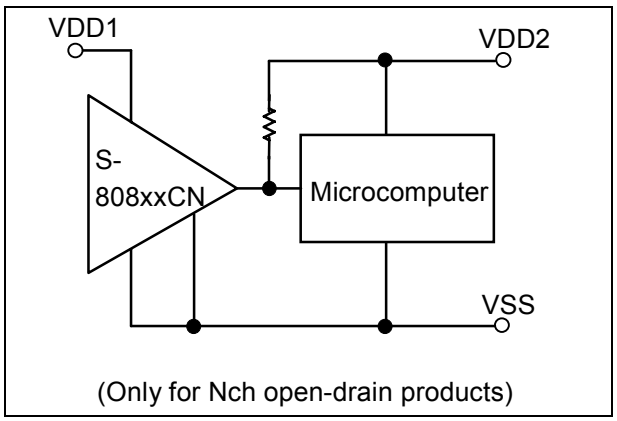

Figure 26 Reset Circuit Example (S-808xxCN)

Caution The above connection diagram and constants do not guarantee correct operation. Perform sufficient evaluation using the actual application to set the constants.

2. Power-on Reset Circuit

A power-on reset circuit can be constructed using Nch open-drain output product of S-808××C Series.

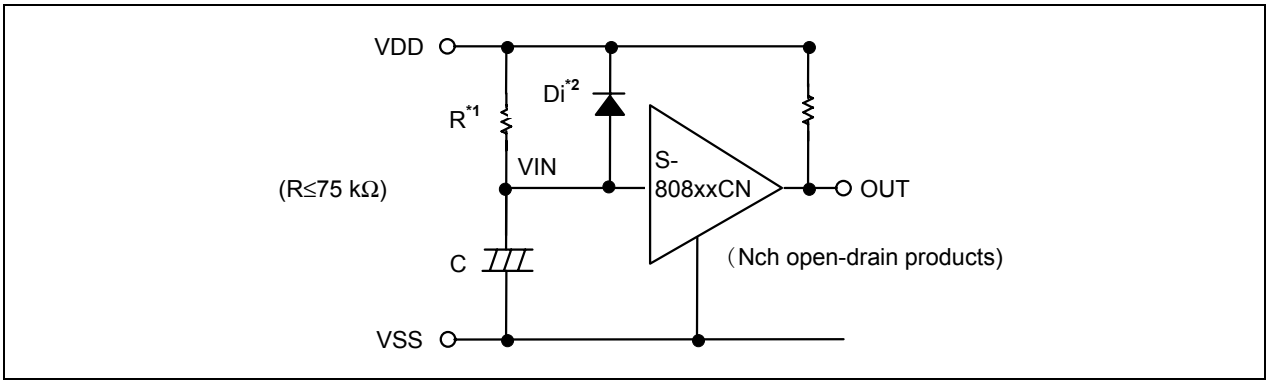

*1. Resistor R should be 75 kΩ or less to prevent oscillation.
*2. Diode Di instantaneously discharges the charge stored in the capacitor (C) at the power falling,Di can be removed when the delay of the falling time is not important.

Figure 27

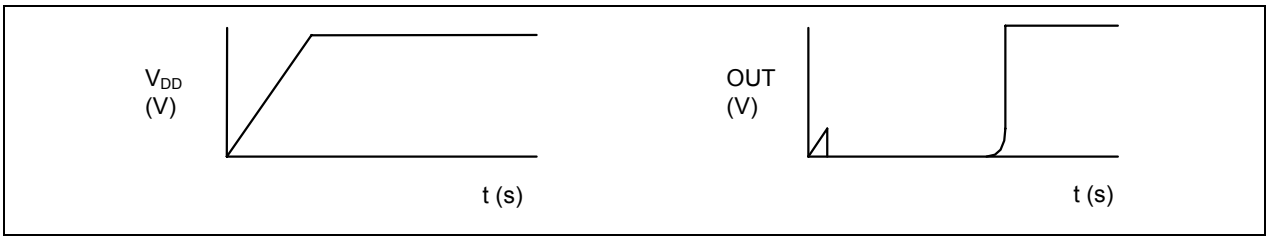

Figure 28

Remark When the power rises sharply as shown in the **Figure 29** left, the output may goes to the high level for an instant in the undefined region where the output voltage is undefined since the power voltage is less than the minimum operation voltage.

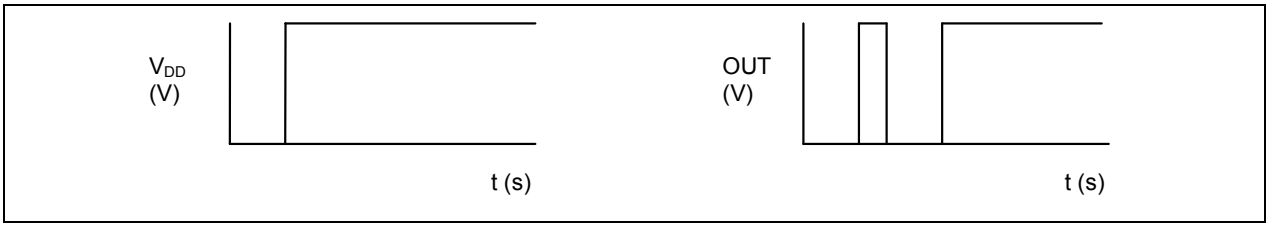

Figure 29

3. Change of Detection Voltage

In Nch open-drain output products of the S-808xxC series, detection voltage can be changed using resistance dividers or diodes as shown in **Figures 30 to 31**. In **Figure 30**, hysteresis width also changes.

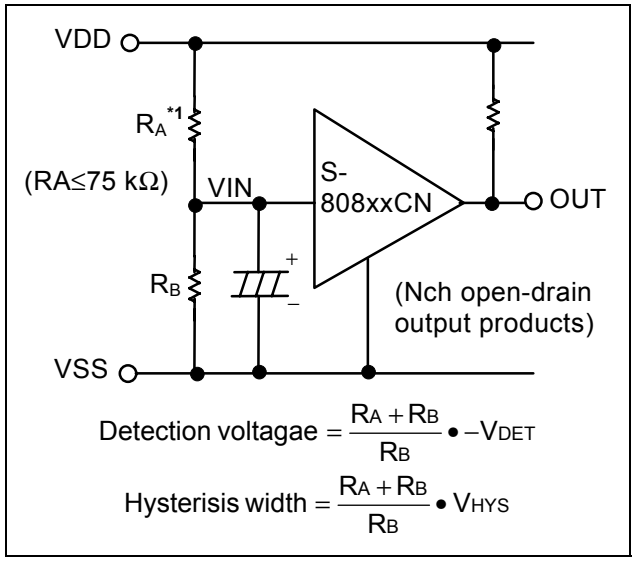

***1.** R_A should be 75 kΩ or less to prevent oscillation.

Caution If R_A and R_B are large, the hysteresis width may aloso be larger than the value given by the above equation due to the through-type current (which flows slightly in an Nch open-drain product).

Figure 30

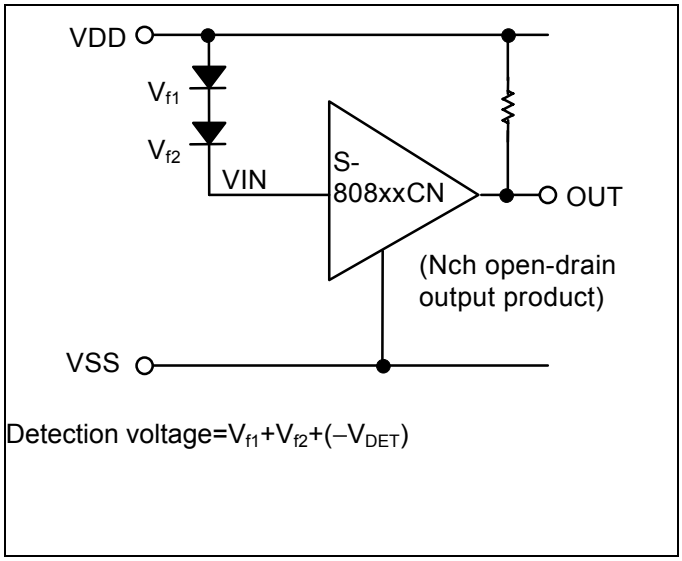

Figure 31

Caution The above connection diagram and constants do not guarantee correct operation. Perform sufficient evaluation using the actual application to set the constants.

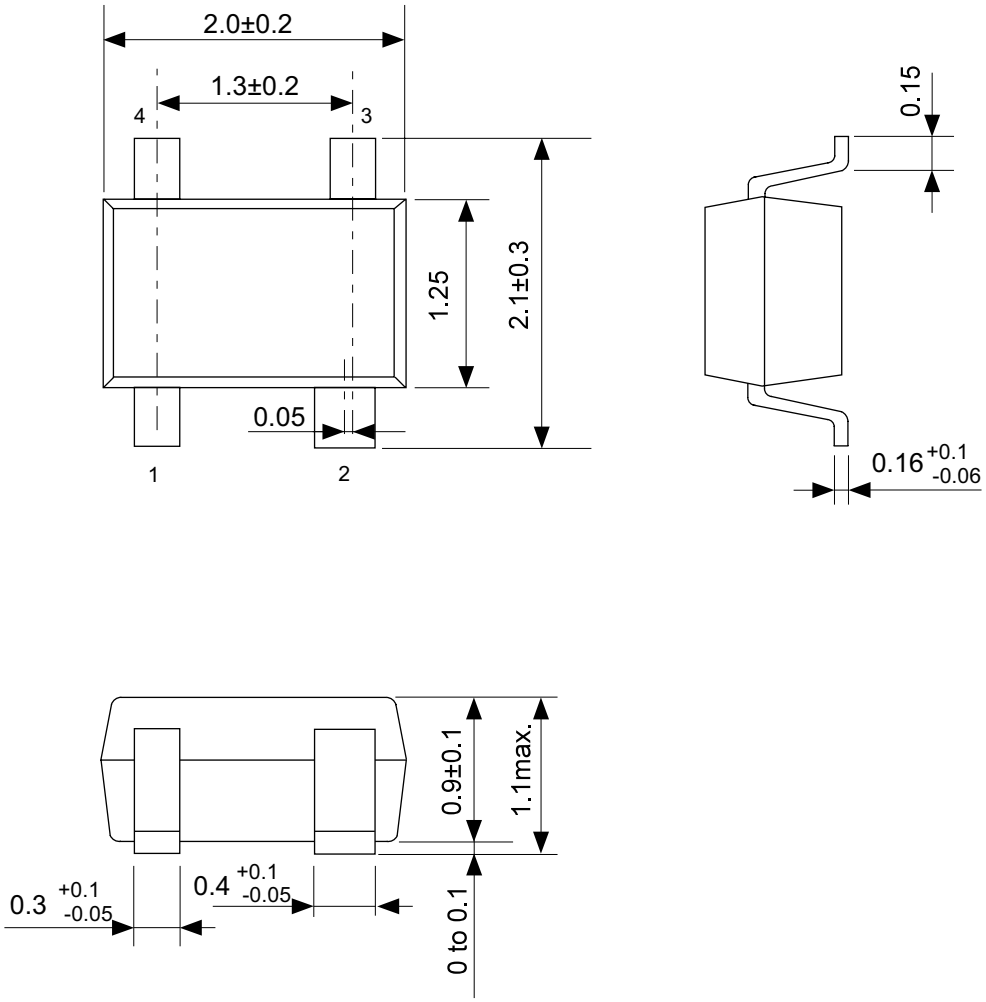

No. NP004-A-P-SD-1.1

TITLE	SC82AB-A-PKG Dimensions
No.	NP004-A-P-SD-1.1
SCALE	
UNIT	mm
Seiko Instruments Inc.	

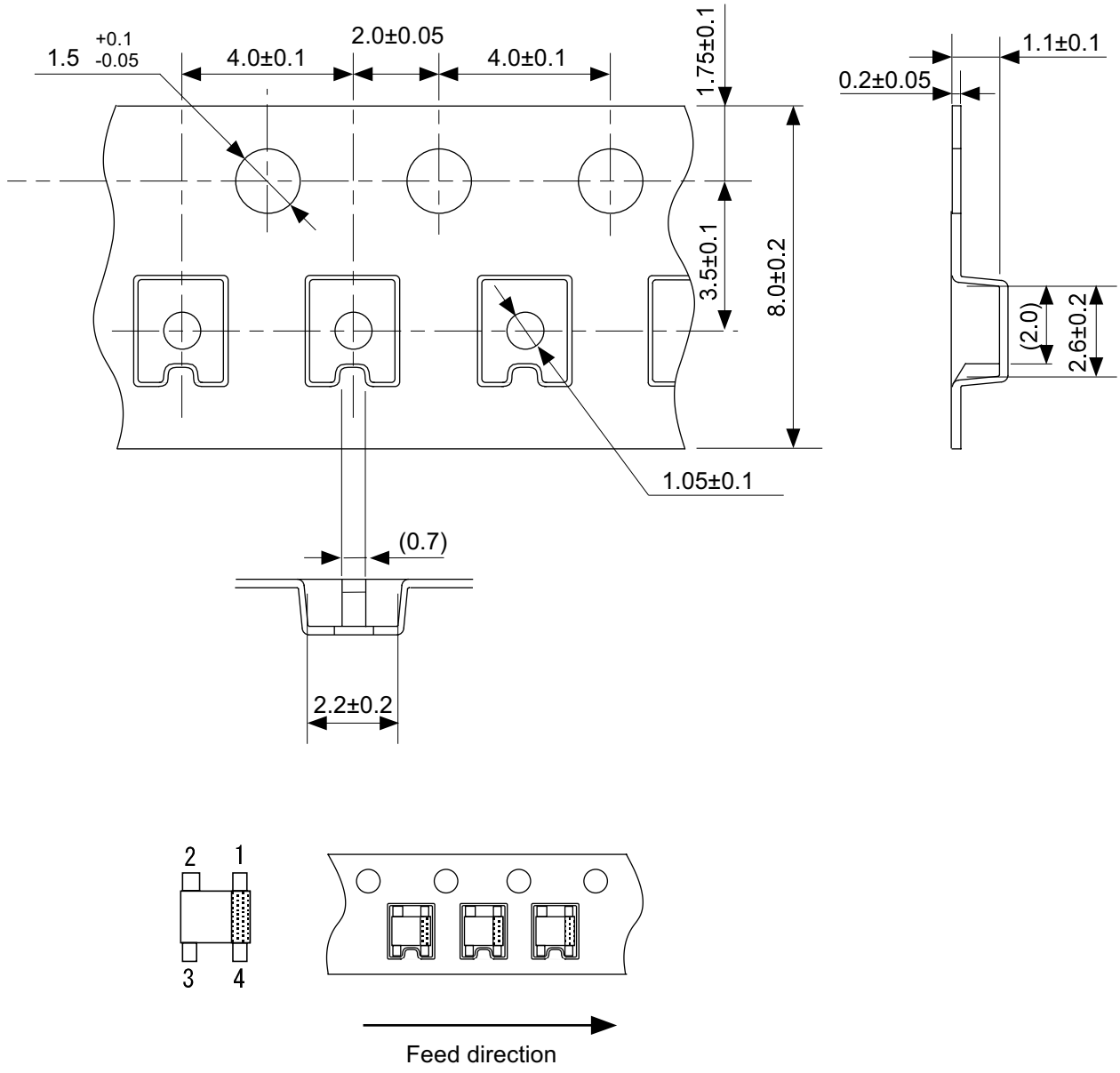

No. NP004-A-C-SD-2.1

TITLE	SC82AB-A-Carrier Tape
No.	NP004-A-C-SD-2.1
SCALE	
UNIT	mm
Seiko Instruments Inc.	

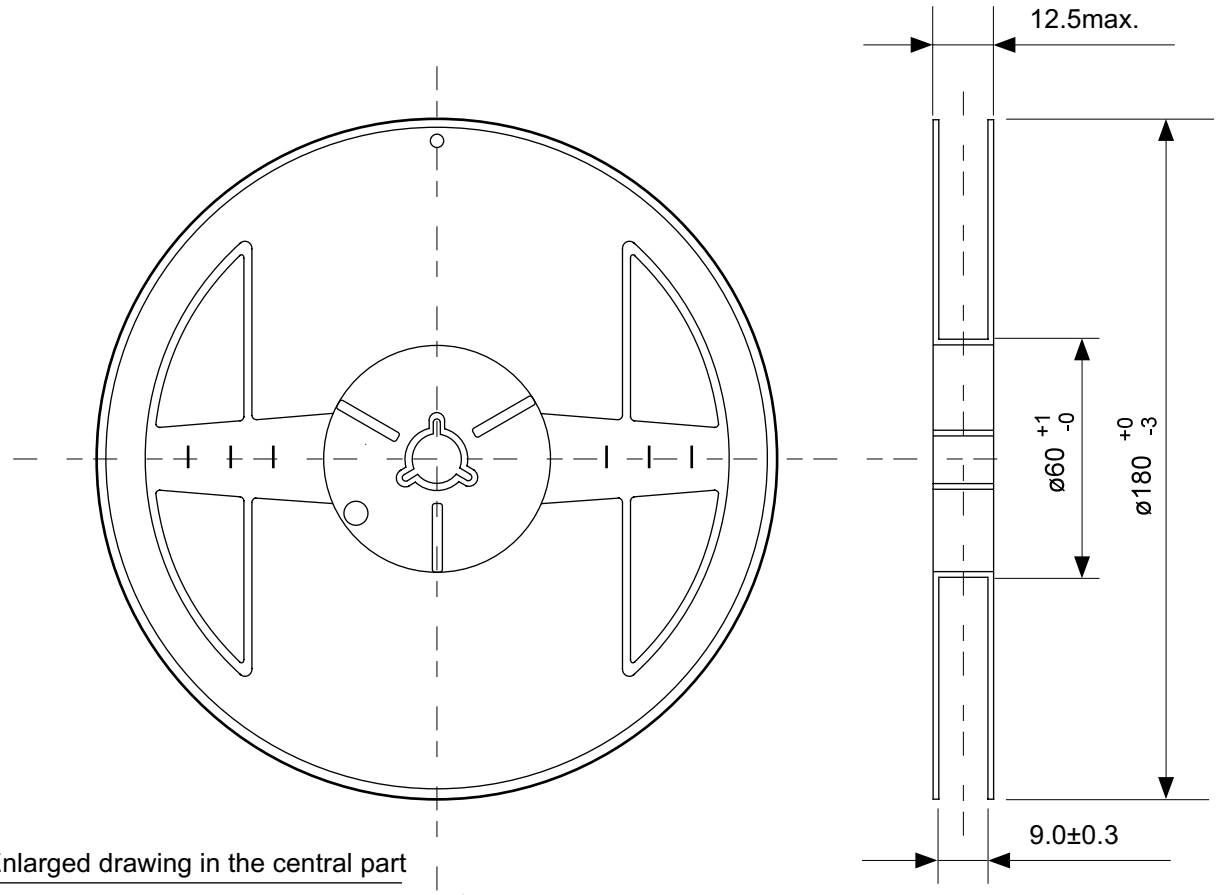

Enlarged drawing in the central part

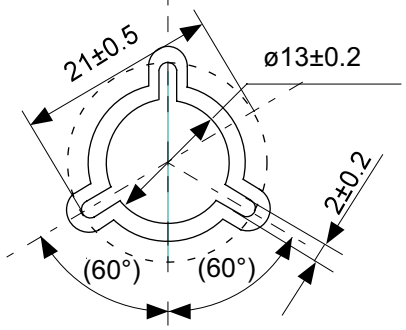

No. NP004-A-R-SD-1.1

TITLE	SC82AB-A-Reel		
No.	NP004-A-R-SD-1.1		
SCALE		QTY.	3,000
UNIT	mm		
Seiko Instruments Inc.			

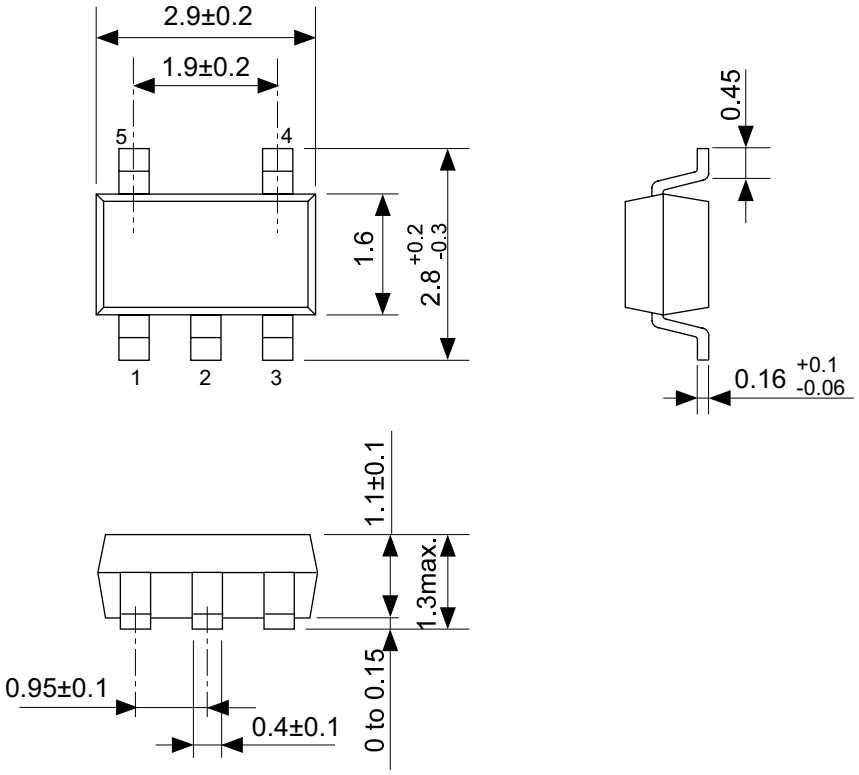

No. MP005-A-P-SD-1.2

TITLE	SOT235-A-PKG Dimensions
No.	MP005-A-P-SD-1.2
SCALE	
UNIT	mm
Seiko Instruments Inc.	

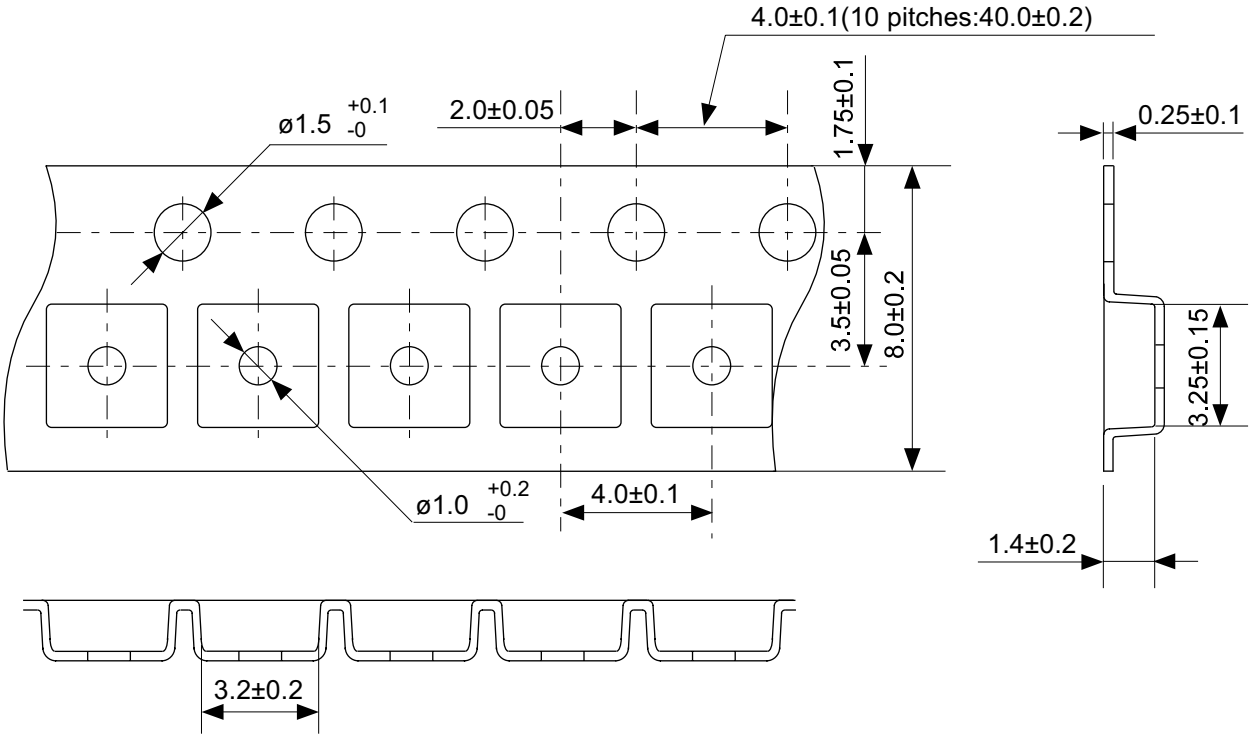

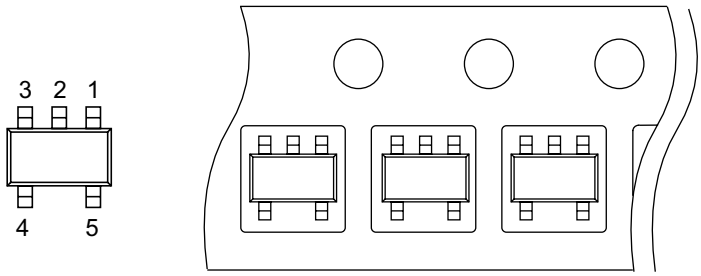

Feed direction

No. MP005-A-C-SD-2.1

TITLE	SOT235-A-Carrier Tape
No.	MP005-A-C-SD-2.1
SCALE	
UNIT	mm
Seiko Instruments Inc.	

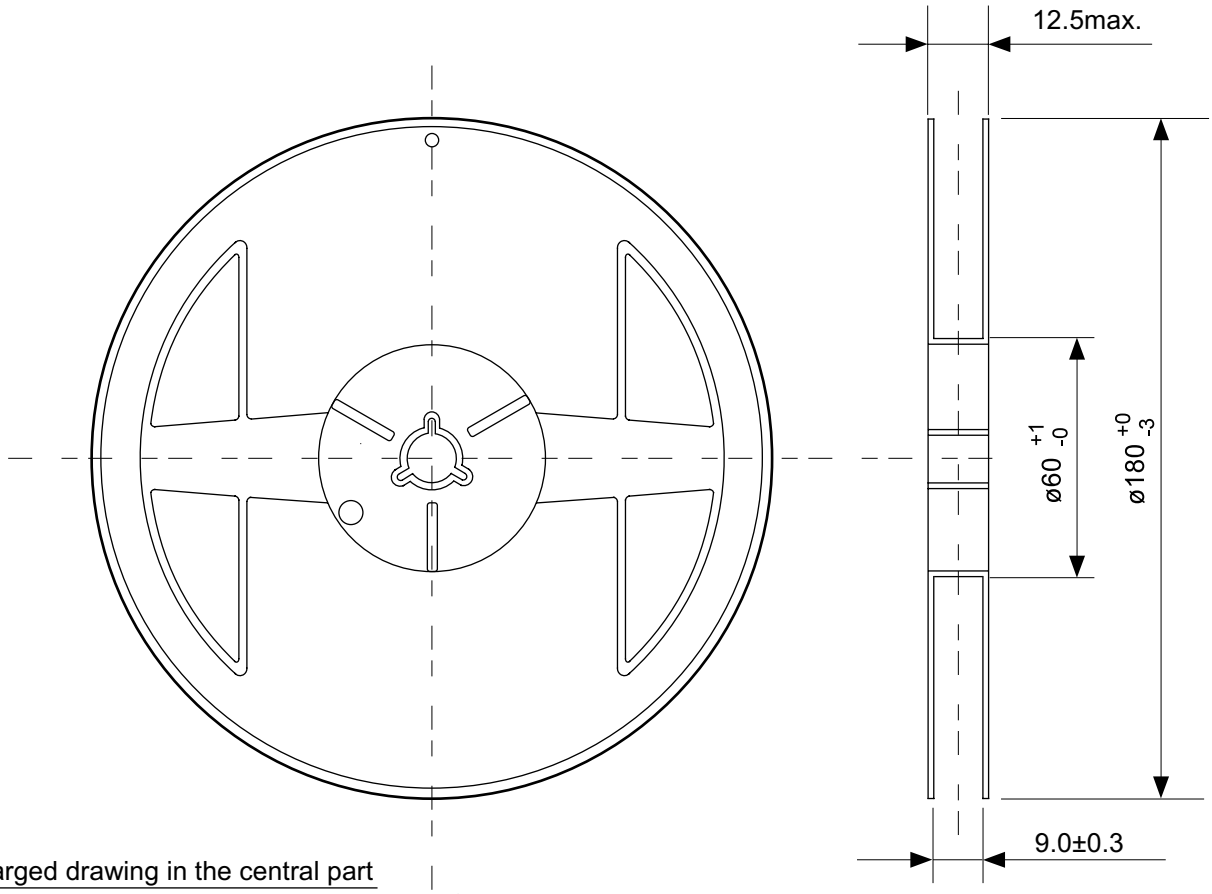

Enlarged drawing in the central part

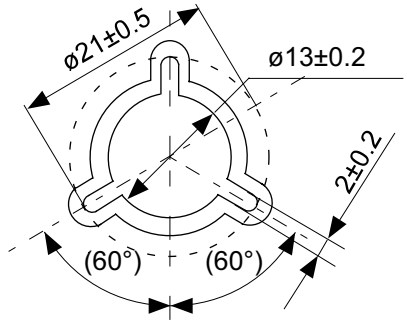

No. MP005-A-R-SD-1.1

TITLE	SOT235-A-Reel		
No.	MP005-A-R-SD-1.1		
SCALE		QTY.	3,000
UNIT	mm		
Seiko Instruments Inc.			

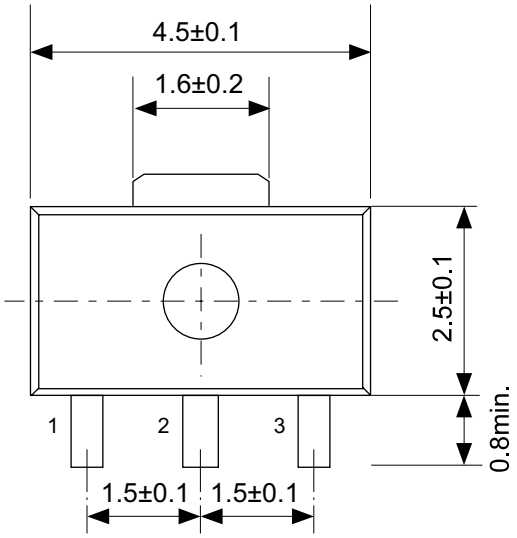

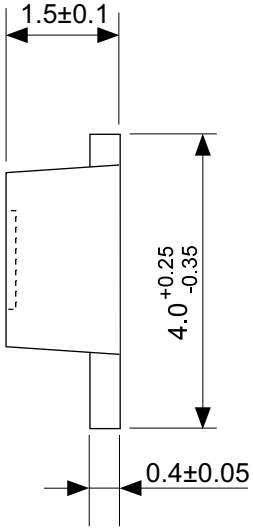

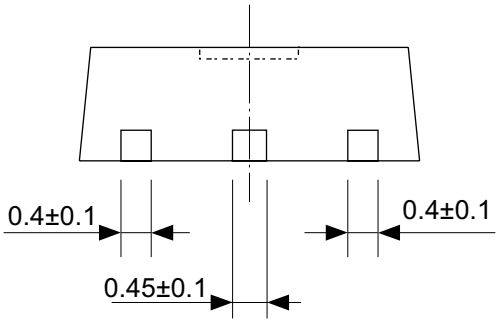

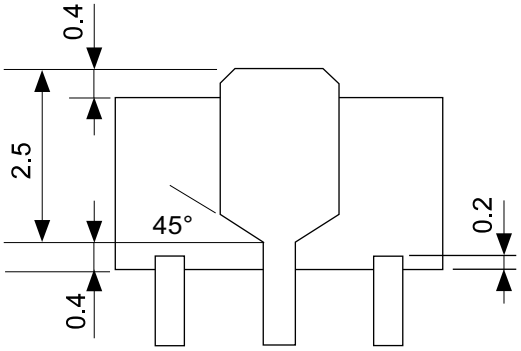

No. UP003-A-P-SD-1.1

TITLE	SOT893-A-PKG Dimensions
No.	UP003-A-P-SD-1.1
SCALE	
UNIT	mm
Seiko Instruments Inc.	

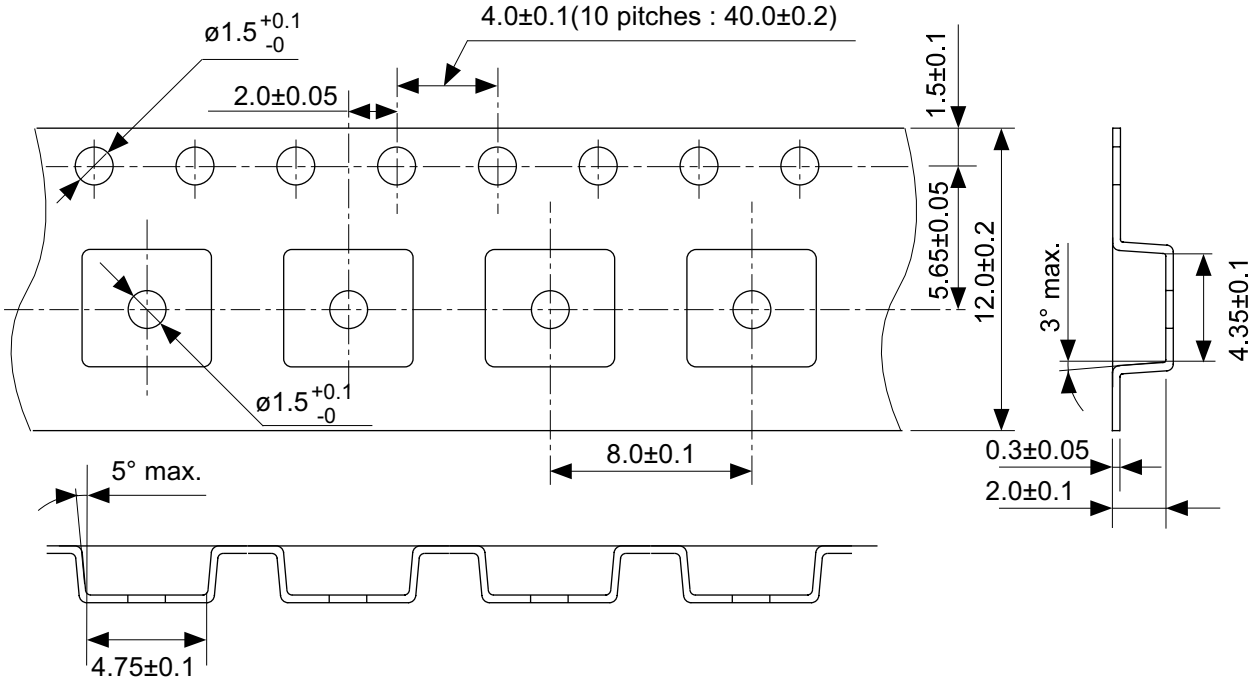

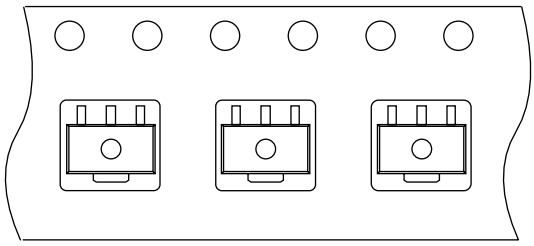

Feed direction

No. UP003-A-C-SD-1.1

TITLE	SOT893-A-Carrier Tape
No.	UP003-A-C-SD-1.1
SCALE	
UNIT	mm
Seiko Instruments Inc.	

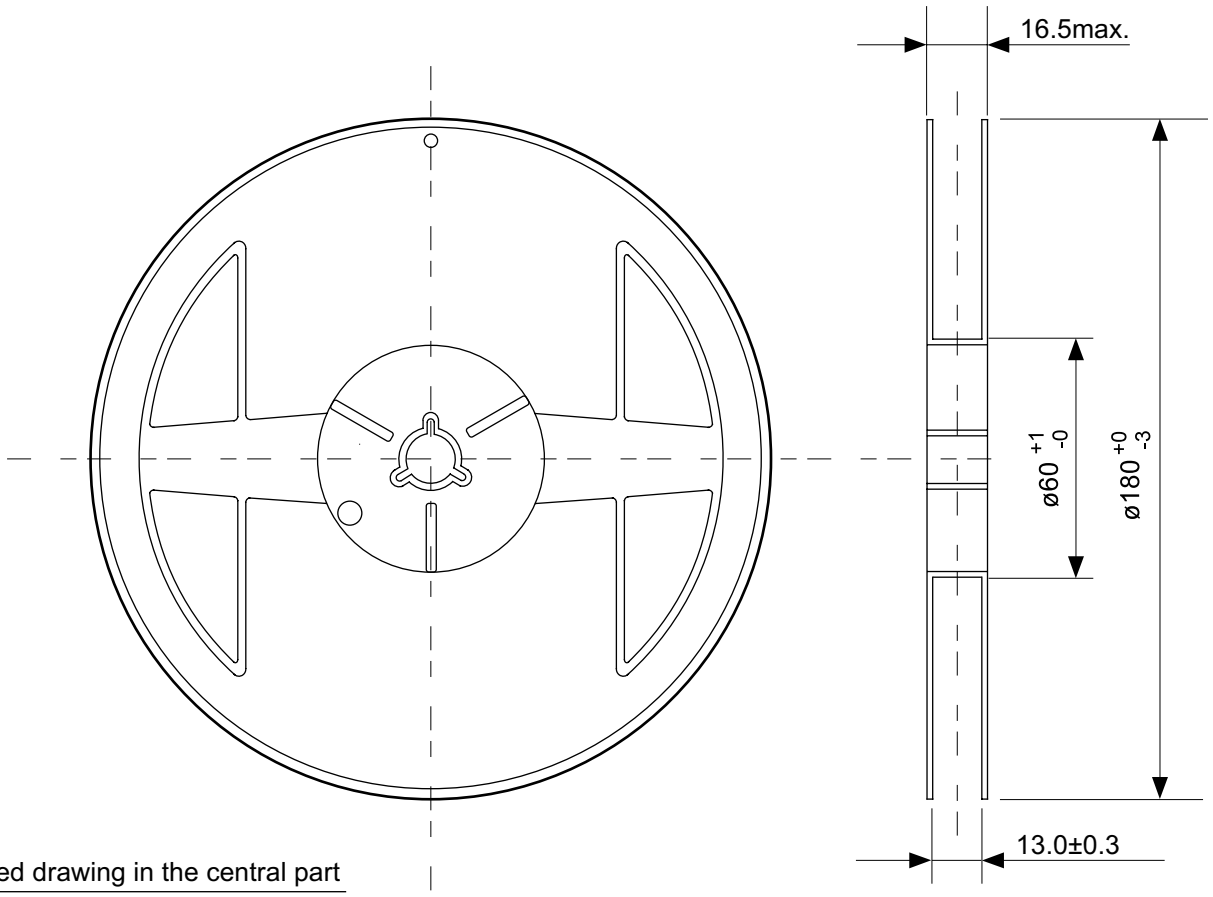

Enlarged drawing in the central part

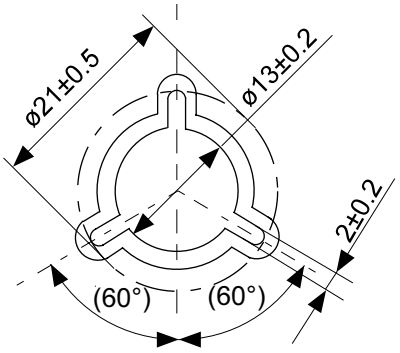

No. UP003-A-R-SD-1.1

TITLE	SOT893-A-Reel		
No.	UP003-A-R-SD-1.1		
SCALE		QTY.	1,000
UNIT	mm		
Seiko Instruments Inc.			

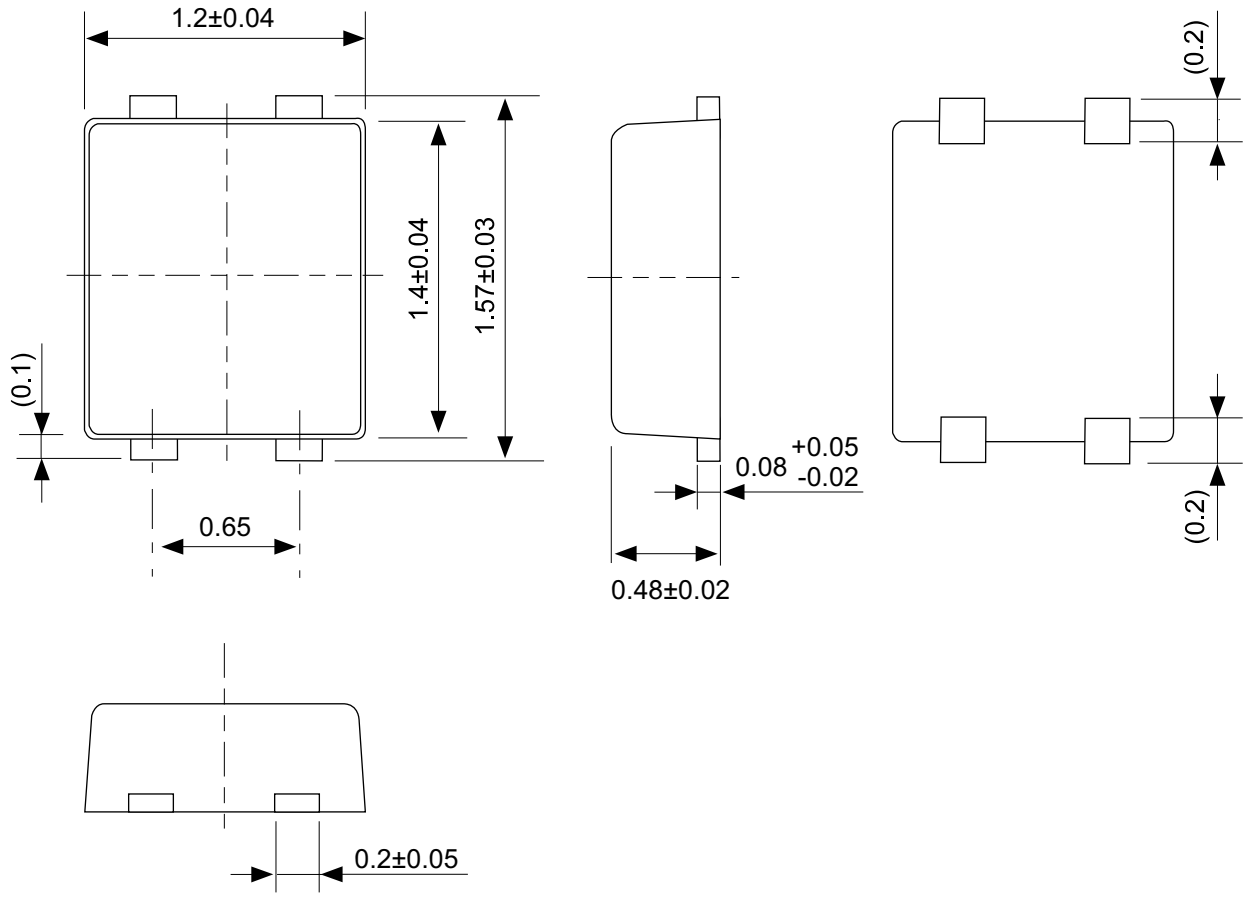

No. PF004-A-P-SD-3.0

TITLE	SNT-4A-A-PKG Dimensions
No.	PF004-A-P-SD-3.0
SCALE	
UNIT	mm
Seiko Instruments Inc.	

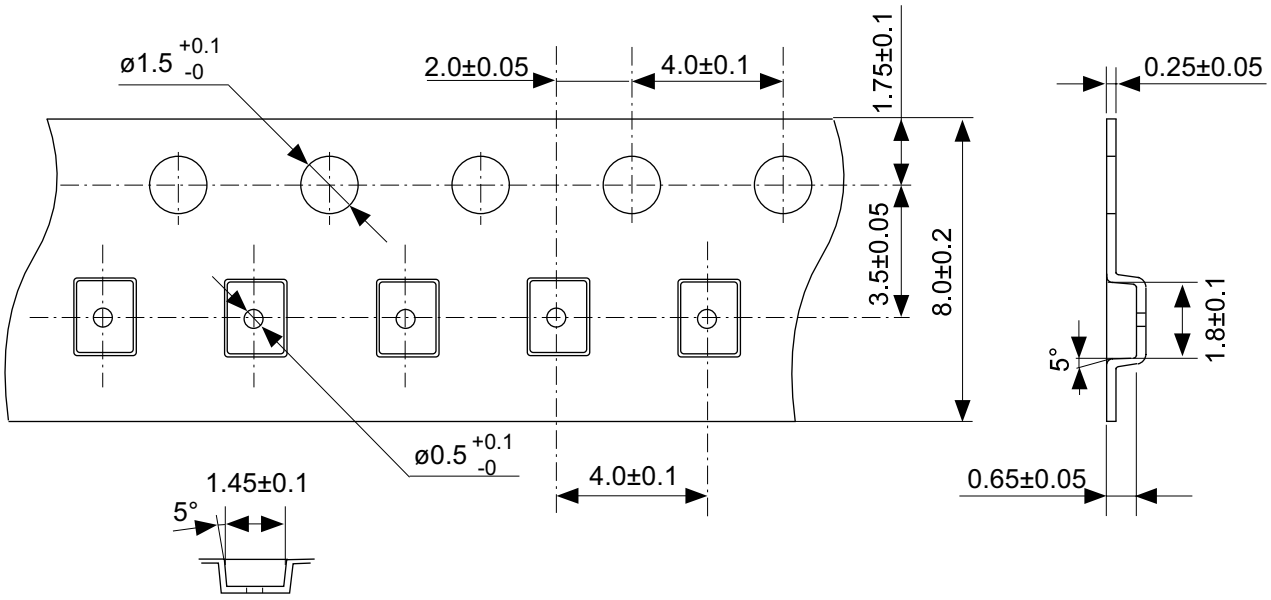

TF type

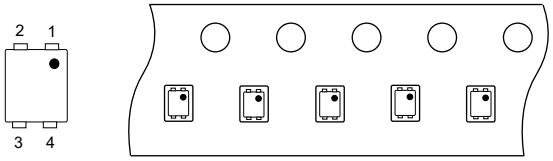

Feed direction

No. PF004-A-C-SD-1.0

TITLE	SNT-4A-A-Carrier Tape
No.	PF004-A-C-SD-1.0
SCALE	
UNIT	mm
Seiko Instruments Inc.	

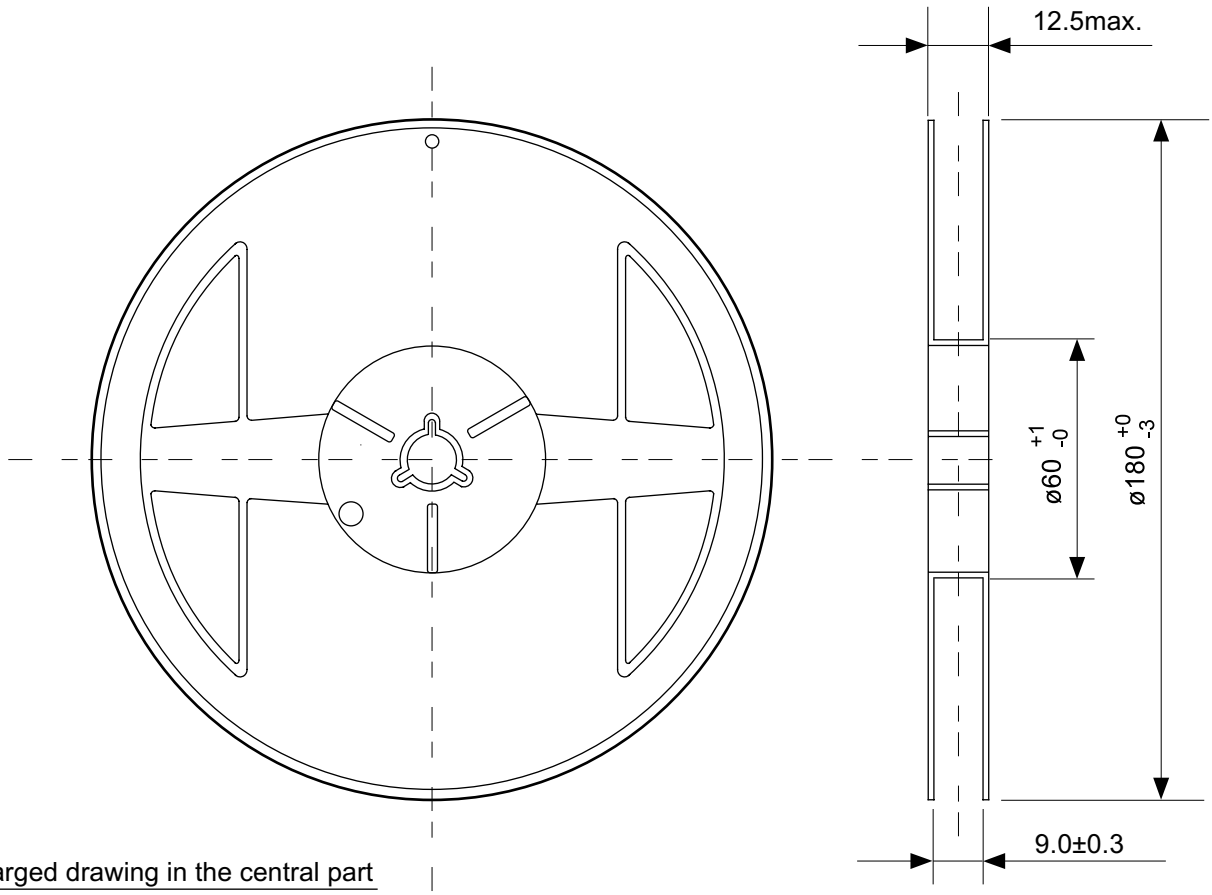

Enlarged drawing in the central part

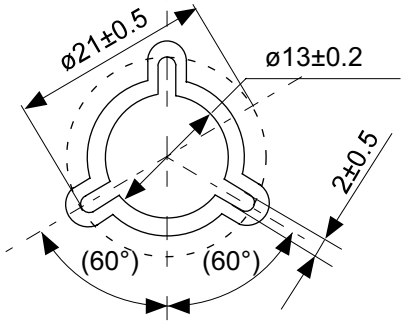

No. PF004-A-R-SD-1.0

TITLE	SNT-4A-A-Reel		
No.	PF004-A-R-SD-1.0		
SCALE		QTY.	5,000
UNIT	mm		
Seiko Instruments Inc.			

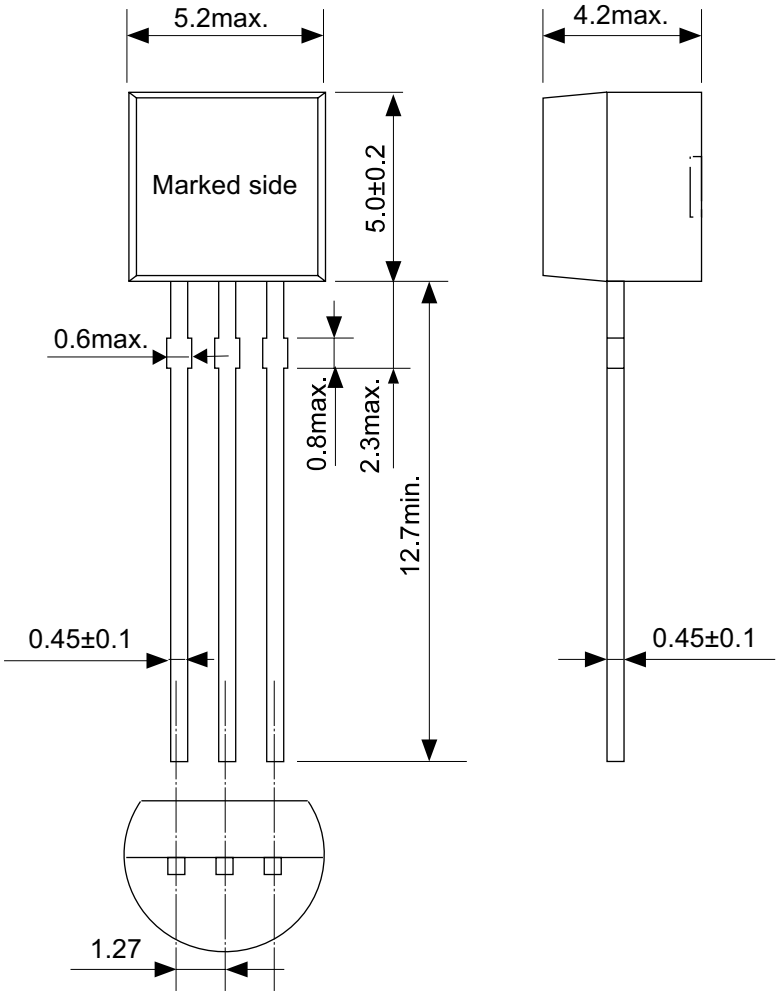

No. YS003-B-P-SD-1.1

TITLE	TO92-B-PKG Dimensions
No.	YS003-B-P-SD-1.1
SCALE	
UNIT	mm
Seiko Instruments Inc.	

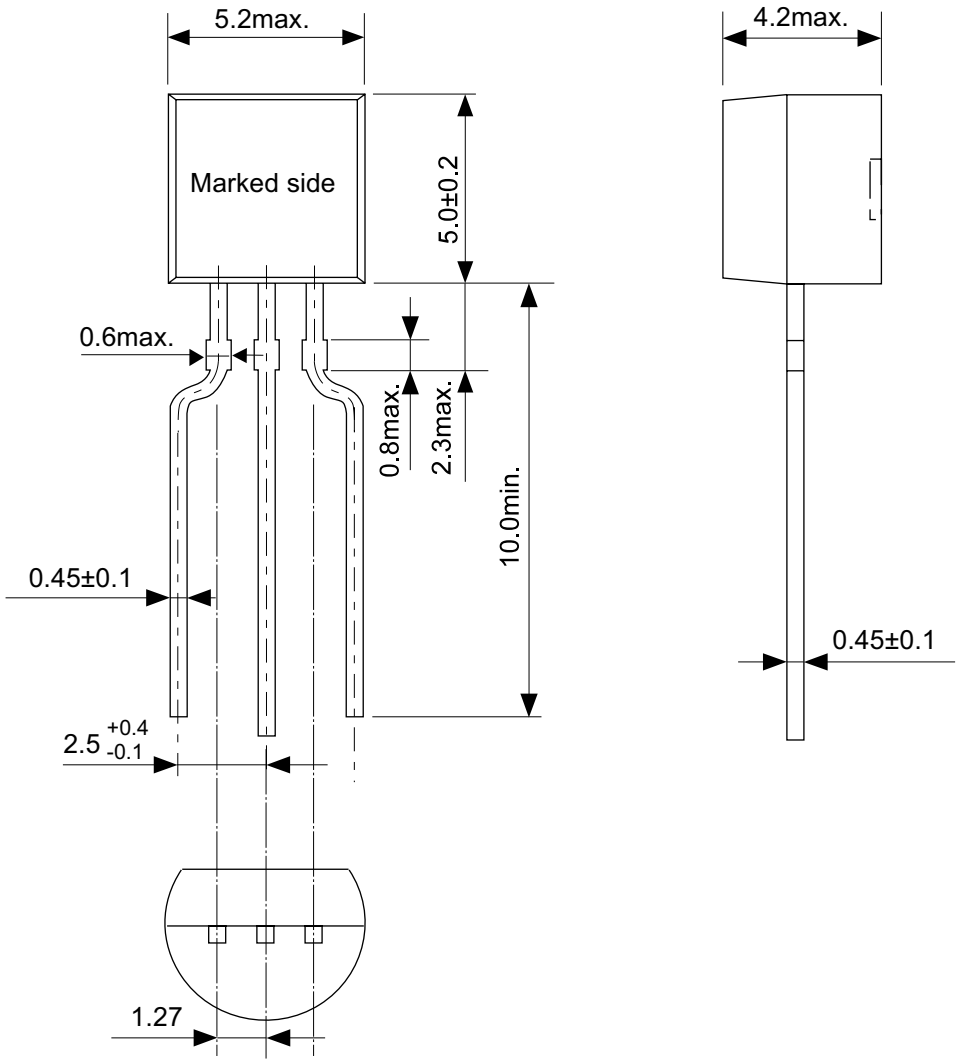

No. YF003-A-P-SD-1.1

TITLE	TO92-A-PKG Dimensions
No.	YF003-A-P-SD-1.1
SCALE	
UNIT	mm
Seiko Instruments Inc.	

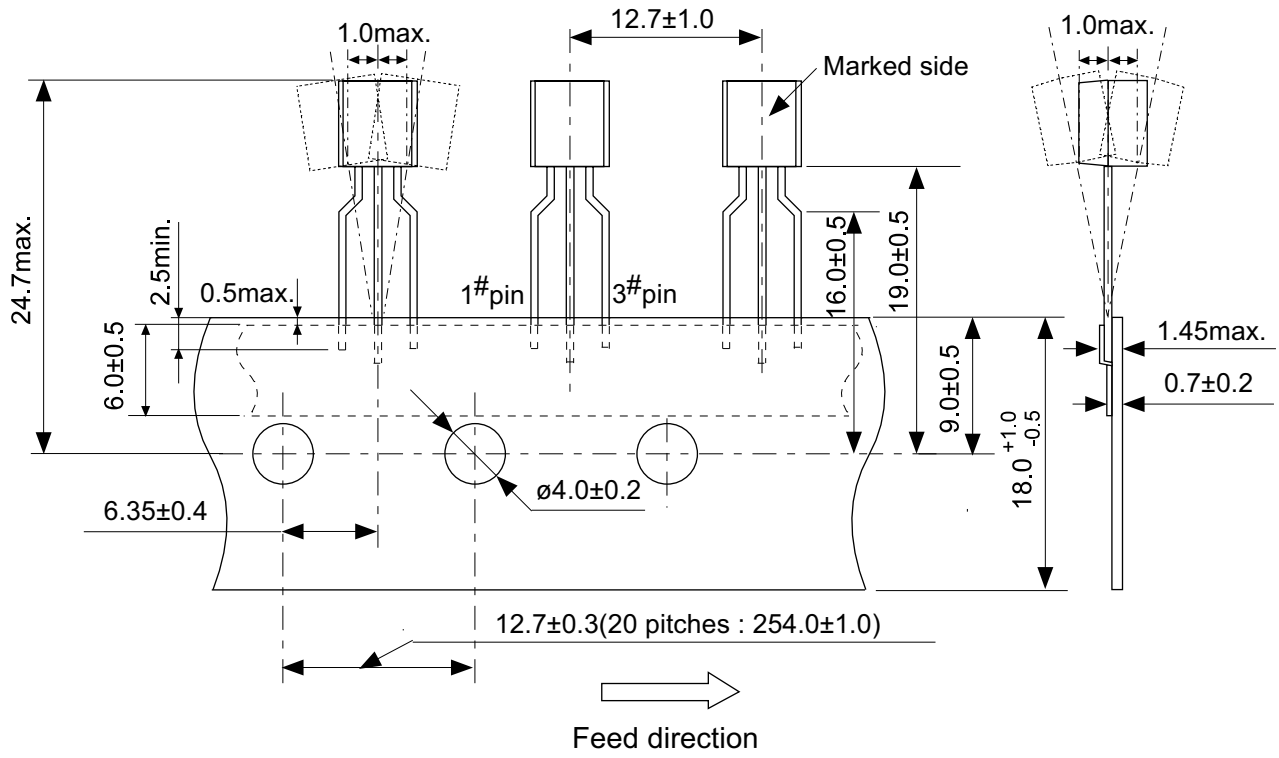

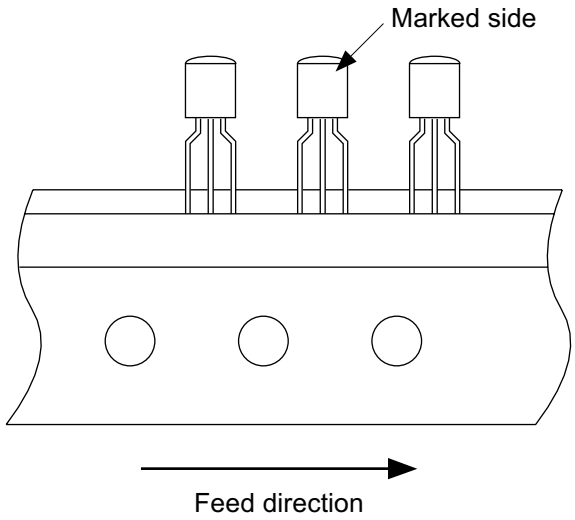

No. YF003-A-C-SD-4.1

TITLE	TO92-A-Radial Tape
No.	YF003-A-C-SD-4.1
SCALE	
UNIT	mm
Seiko Instruments Inc.	

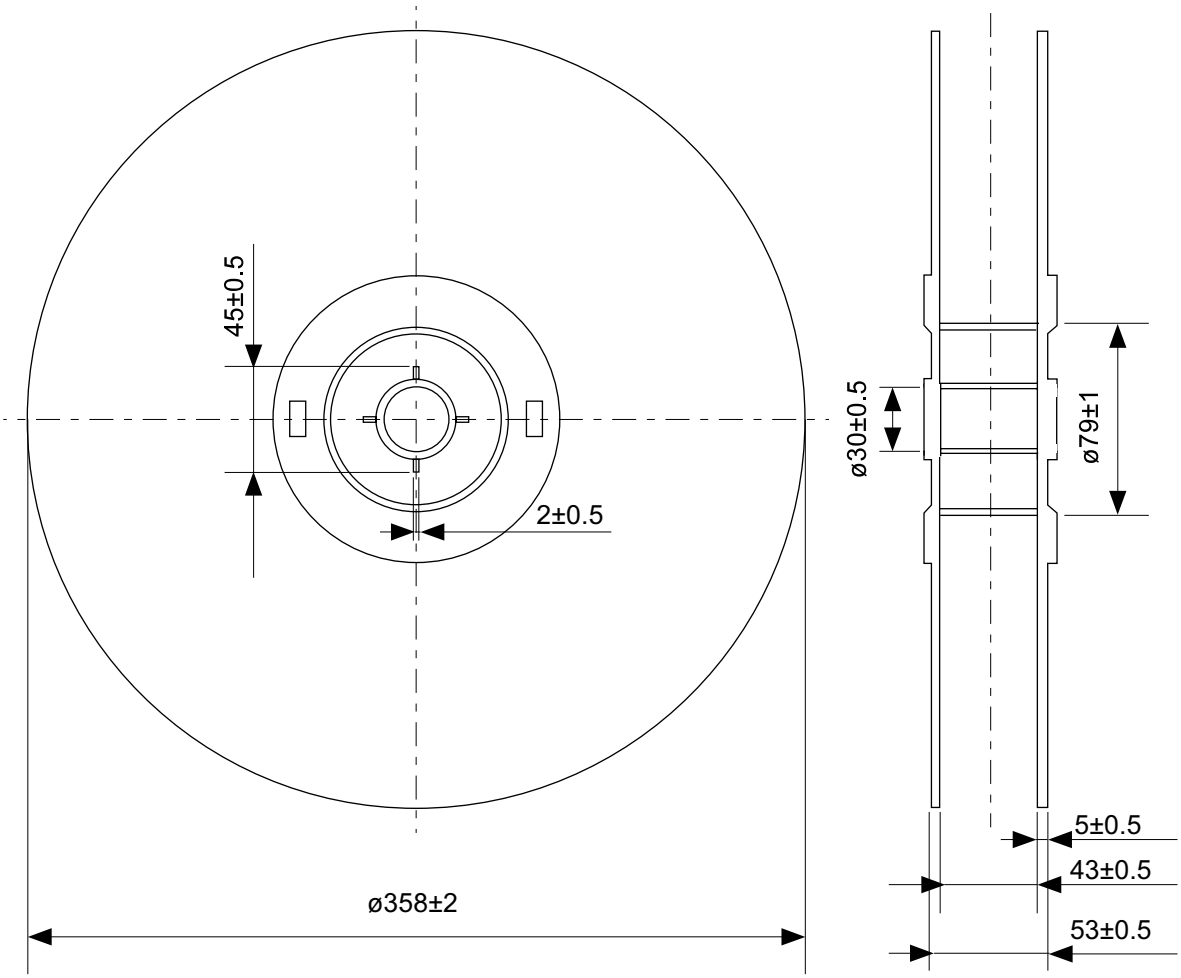

No. YF003-A-R-SD-2.1

TITLE	TO92-A-Reel		
No.	YF003-A-R-SD-2.1		
SCALE		QTY.	2,000
UNIT	mm		
Seiko Instruments Inc.			

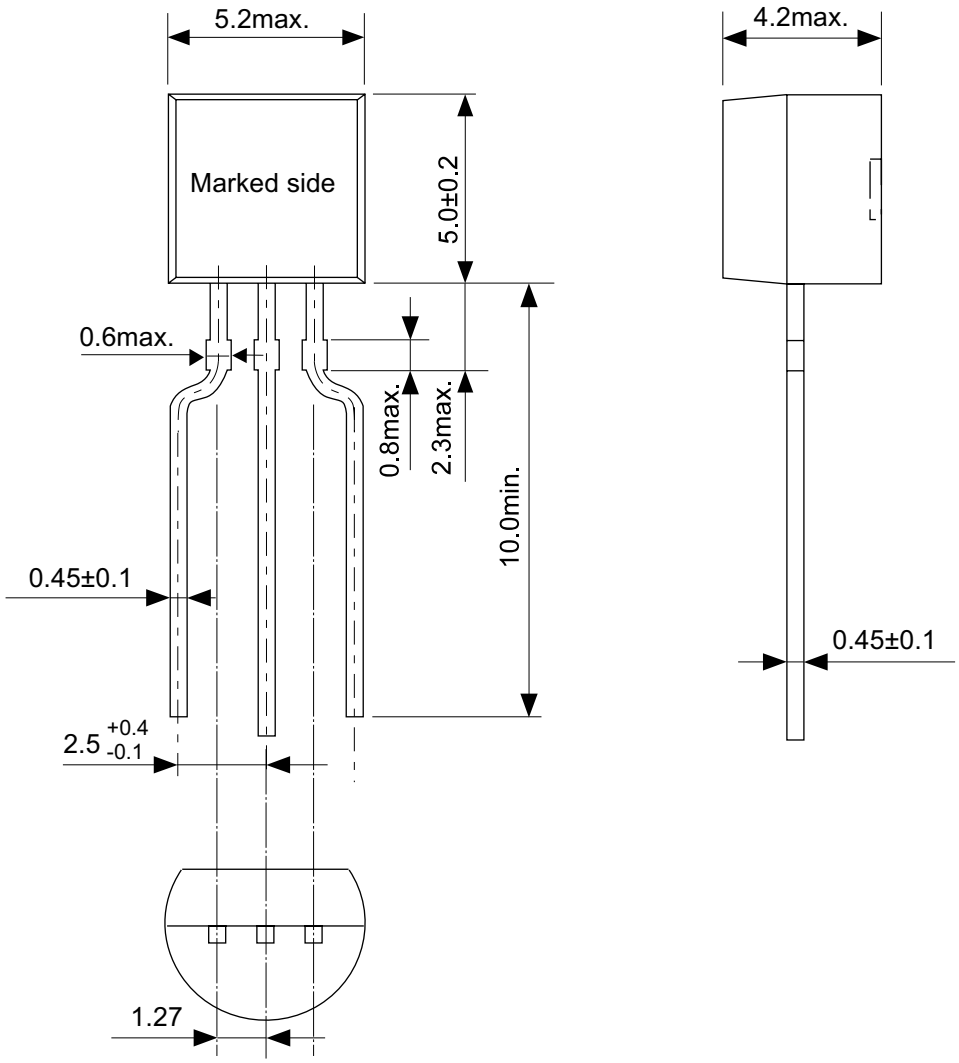

No. YF003-A-P-SD-1.1

TITLE	TO92-A-PKG Dimensions
No.	YF003-A-P-SD-1.1
SCALE	
UNIT	mm
Seiko Instruments Inc.	

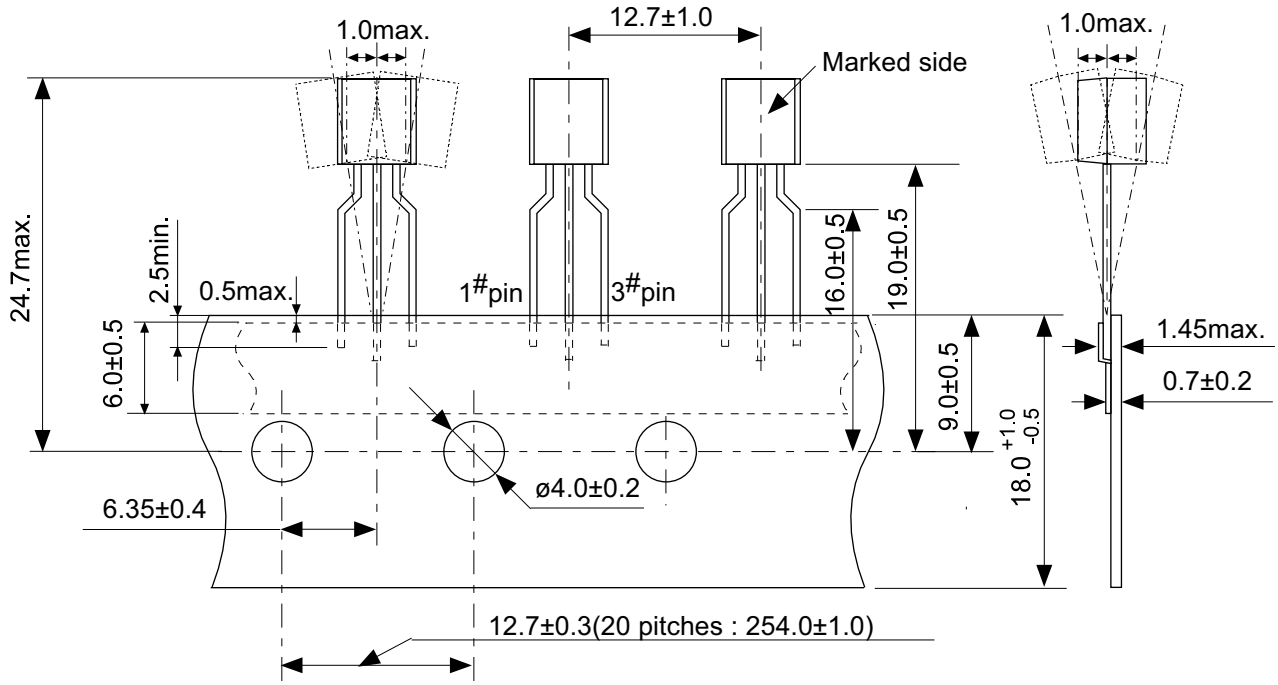

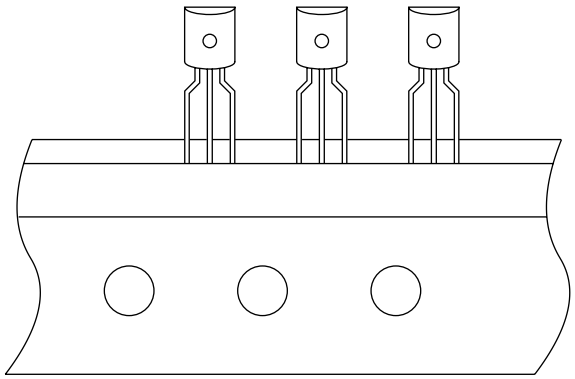

Feed direction

No. YZ003-C-C-SD-3.1

TITLE	TO92-C-Radial Tape
No.	YZ003-C-C-SD-3.1
SCALE	
UNIT	mm
Seiko Instruments Inc.	

Spacer

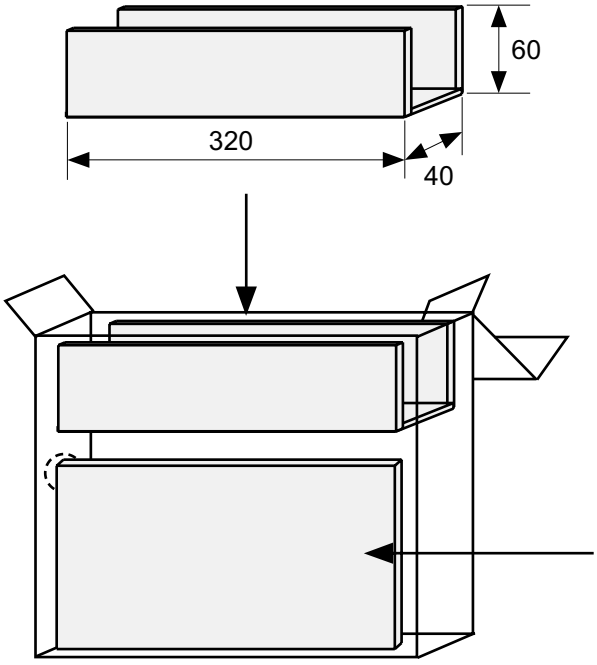

Side spacer placed in front side

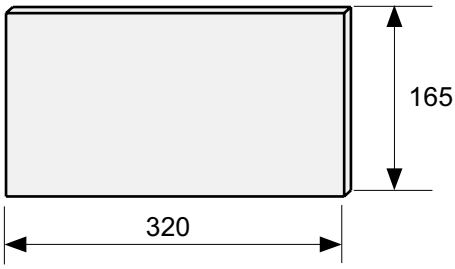

Space more than 4 strokes

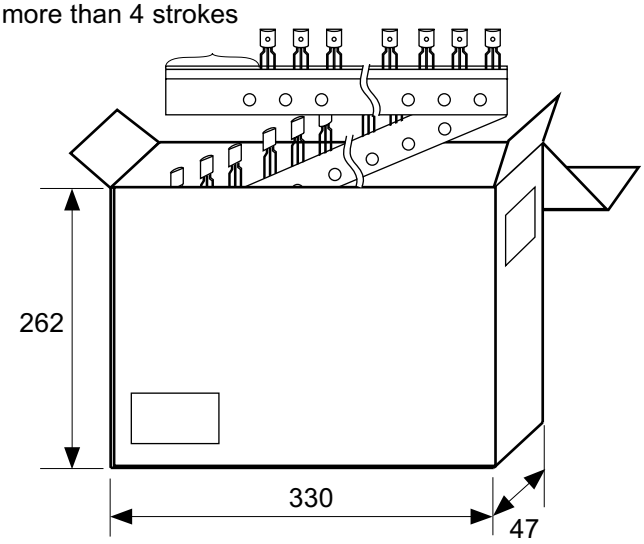

No. YZ003-C-Z-SD-2.1

TITLE	TO92-C-Ammo Packing		
No.	YZ003-C-Z-SD-2.1		
SCALE		QTY.	2,500
UNIT	mm		
Seiko Instruments Inc.			

- The information described herein is subject to change without notice.
- Seiko Instruments Inc. is not responsible for any problems caused by circuits or diagrams described herein whose related industrial properties, patents, or other rights belong to third parties. The application circuit examples explain typical applications of the products, and do not guarantee the success of any specific mass-production design.
- When the products described herein are regulated products subject to the Wassenaar Arrangement or other agreements, they may not be exported without authorization from the appropriate governmental authority.
- Use of the information described herein for other purposes and/or reproduction or copying without the express permission of Seiko Instruments Inc. is strictly prohibited.
- The products described herein cannot be used as part of any device or equipment affecting the human body, such as exercise equipment, medical equipment, security systems, gas equipment, or any apparatus installed in airplanes and other vehicles, without prior written permission of Seiko Instruments Inc.
- Although Seiko Instruments Inc. exerts the greatest possible effort to ensure high quality and reliability, the failure or malfunction of semiconductor products may occur. The user of these products should therefore give thorough consideration to safety design, including redundancy, fire-prevention measures, and malfunction prevention, to prevent any accidents, fires, or community damage that may ensue.