EPSON
EXCEED YOUR VISION

S7R77021

CCD/CIS Signal Processor with Timing Generator

■ OVERVIEW

S7R77021 is an analog front end IC equipped with CCD drive clock generation function that provides high-speed read rate. This IC incorporates three high-resolution 16bit A/D converters and has control function that drives a shutter-less CCD. Since this IC adopts RSDS to image data output, it is able to reduce radiation noise. By using this LSI, it easily provides a scanner system that offers the high quality image.

■ FEATURES

- 16bit, A/D converter 3-channel
- Maximum image data transfer rate (AFE transfer clock): 30MHz
- Maximum 3-channel input (color 3-channel, monochrome 2-channel (odd/even), monochrome 1-channel)
- Analog power input range: 2Vp-p(Full-scale input range to A/D converter: 1Vp-p)
- Programmable gain amp
  Gain adjustable range: -6.9dB(0.45-times) to +12.0dB(4.0-times), 6bit resolution
- Programmable offset range: -250mV to +250mV, 8bit resolution
- Built-in CCD/CIS drive clock and AFE drive clock generation function
- 3-line serial interface
- 8bit x 2 multiplex image data output (Low amplitude differential output)
- Package PFBGA121pin (0.8mm pitch) or QFP100pin (0.5mm pitch)
- 3.3V single power supply
- Includes PLL for clock generation (4 to 16-multiplication)
- Internal reference clock frequency: 75MHz < External clock frequency < 120MHz

■ BLOCK DIAGRAM

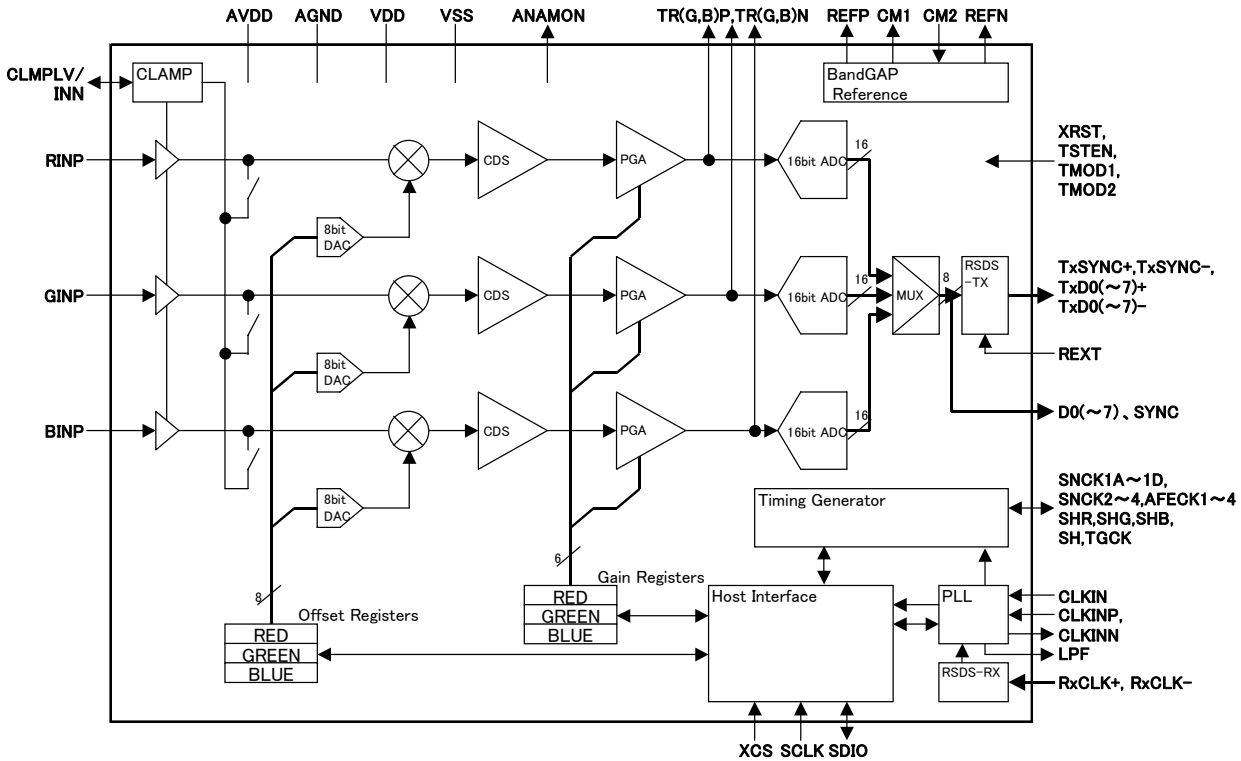

■ APPLICATIONS

Scanner, MFP, Copy-machine, FAX etc.

S7R77021

NOTICE:

No part of this material may be reproduced or duplicated in any form or by any means without the written permission of Seiko Epson. Seiko Epson reserves the right to make changes to this material without notice. Seiko Epson does not assume any liability of any kind arising out of any inaccuracies contained in this material or due to its application or use in any product or circuit and, further, there is no representation that this material is applicable to products requiring high level reliability, such as, medical products. Moreover, no license to any intellectual property rights is granted by implication or otherwise, and there is no representation or warranty that anything made in accordance with this material will be free from any patent or copyright infringement of a third party. This material or portions thereof may contain technology or the subject relating to strategic products under the control of the Foreign Exchange and Foreign Trade Law of Japan and may require an export license from the Ministry of Economy, Trade and Industry or other approval from another government agency.

©Seiko Epson Corporation 2008, All rights reserved.

SEIKO EPSON CORPORATION

SEMICONDUCTOR OPERATIONS DIVISION

IC Sales Department
IC Marketing Group
421-8 Hino, Hino-shi, Tokyo 191-8501, JAPAN
Phone: 042-587-5814 FAX: 042-587-5117

■ EPSON Electronic devices Website

http://www.epson.jp/device/semicon_e/

Document code: 411653100
First issue December, 2008 in Japan