AUK Semiconductor

S78xxD

Fixed Voltage Regulator

Descriptions

The S78xx series are three-terminal positive regulators providing over 1A output current with internal current limiting, thermal shutdown and safe area protection. These regulators are useful in a wide range of applications. Although they are just fixed voltage regulators, the S78xx series can be used with external components to obtain adjustable voltages and currents.

Features

- Output Current of 1A
- Short Circuit Current Limit Protection
- Thermal Shutdown Protection
- Output Transistor Safe Area Protection

Ordering Information

Type NO.	Marking	Package Code
S78xxD	S78□□D	D-Pak

□□:Voltage Code (05:5V, 06:6V, 08:8V, 09:9V, 10:10V,12:12V,15:15V,24:24V)

Outline Dimensions (Unit : mm)

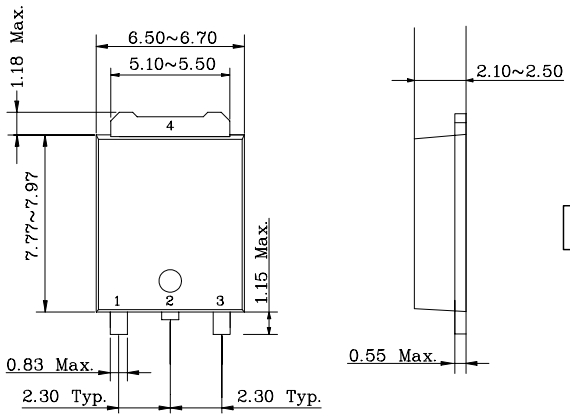

BLOCK DIAGRAM

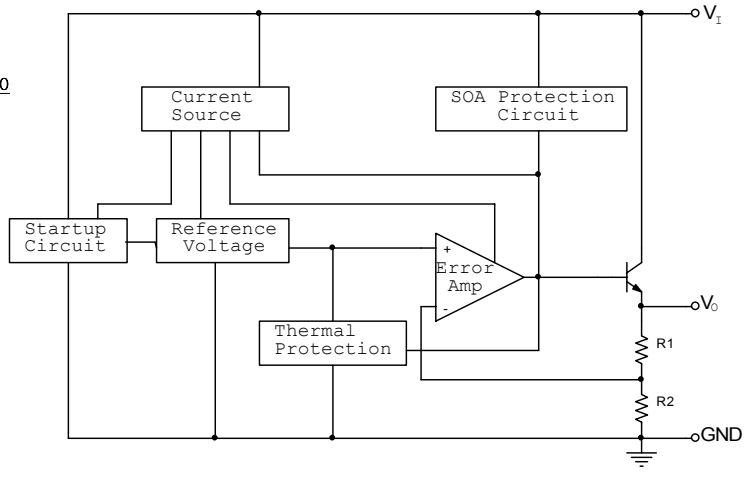

PIN Connections

1. Input
2,4. GND
3. Output

Absolute Maximum Ratings

Ta=25°C

Characteristic	Symbol	Rating	Unit
Input voltage	V_I	40 (S7824D)	V
		35 (ALL Others)	V
Power dissipation	P_D1 (Note1)	4.5	W
	P_D2 (Note2)	1.5	
Operating temperature range	T_{opr}	-40 ~ +85	°C
Junction temperature	T_J	150	°C
Storage temperature range	T_{stg}	-55 ~ +150	°C

Note 1 : Mounted on a glass epoxy circuit board of 50.8 x 50.8mm. (at 1oz copper area)

Note 2 : No Heat sink

Device Selection Guide

Device	Output Voltage
S7805D	5V
S7806D	6V
S7808D	8V
S7809D	9V
S7810D	10V
S7812D	12V
S7815D	15V
S7824D	24V

Electrical Characteristics

(Electrical Characteristics at 0℃≤T_J≤125℃ and V_I=10V, I_O=500 ㎃, Unless otherwise specified)

Characteristic	Symbol	Test Condition*		S7805D			Unit
				Min.	Typ.	Max.	
Output Voltage**	V_O		T_J =25℃	4.80	5.0	5.20	V
		I_O=5 ㎃ ~ 1000 ㎃ V_I=7.0V ~ 20V	0℃≤T_J≤125℃	4.75	5.0	5.25	
Line Regulation	$\Delta V_{O(\triangle VI)}$	V_I=7.0V ~ 25V	T_J =25℃	-	3	100	㎷
		V_I=8.0V ~ 12V		-	1	50	
Load Regulation	$\Delta V_{O(\triangle IL)}$	I_O=5mA ~ 1000 ㎃	T_J =25℃	-	15	100	㎷
		I_O=250mA ~ 750mA		-	5	50	
Quiescent Current	I_{QC}		T_J =25℃	-	4.2	8.0	㎃
Temperature coefficient of Output voltage	$\triangle V_O$/ $\triangle$Temp	I_O=5 ㎃	0℃≤T_J≤125℃	-	-1.1	-	㎷/℃
Quiescent Current Change	ΔI_{QC}	V_I = 7.0V ~ 25V	0℃≤T_J≤125℃	-	-	1.3	㎃
		I_O = 5 ㎃ ~ 1000 ㎃		-	-	0.5	
Dropout Voltage	V_{DROP}	I_O=1000 ㎃	T_J =25℃	-	2.0	-	V
Ripple Rejection	RR	f=120 ㎐ V_I =8.0V ~ 18V	0℃≤T_J≤125℃	62	78	-	dB
Short-Circuit Current Limit	I_{SO}		T_J =25℃	-	0.75	-	A

* Pulse testing techniques are used to maintain the junction temperature as close to the ambient temperature as possible. Thermal effects must be taken into separately.

** This specification applies only for dc power dissipation permitted by absolute maximum ratings.

Electrical Characteristics

(Electrical Characteristics at $0℃ \leq T_J \leq 125℃$ and V_I=11V, I_O=500 ㎃, Unless otherwise specified)

Characteristic	Symbol	Test Condition*		S7806D			Unit
				Min.	Typ.	Max.	
Output Voltage**	V_O		T_J =25℃	5.75	6	6.25	V
		I_O=5 ㎃ ~ 1000 ㎃ V_I=8.0V ~ 21V	0℃≤T_J≤125℃	5.70	6	6.30	
Line Regulation	$\triangle V_{O(\triangle VI)}$	V_I=8.0V ~ 25V	T_J =25℃	-	5	120	㎷
		V_I=9.0V ~ 13V		-	1.5	60	
Load Regulation	$\triangle V_{O(\triangle IL)}$	I_O=5 ㎃ ~ 1000 ㎃	T_J =25℃	-	14	120	㎷
		I_O=250 ㎃ ~ 750 ㎃		-	4	60	
Quiescent Current	I_{QC}		T_J =25℃	-	4.3	8	㎃
Temperature coefficient of Output voltage	$\triangle V_O$/ $\triangle$Temp	I_O=5 ㎃	0℃≤T_J≤125℃	-	-0.8	-	㎷/℃
Quiescent Current Change	$\triangle I_{QC}$	V_I = 8.0V ~ 25V	0℃≤T_J≤125℃	-	-	1.3	㎃
		I_O = 5 ㎃ ~ 1000 ㎃		-	-	0.5	
Dropout Voltage	V_{DROP}	I_O=1000 ㎃	T_J =25℃	-	2.0	-	V
Ripple Rejection	RR	f=120 ㎐ V_I =9.0V ~ 19V	0℃≤T_J≤125℃	59	75	-	㏈
Short-Circuit Current Limit	I_{SO}		T_J =25℃	-	0.55	-	A

* Pulse testing techniques are used to maintain the junction temperature as close to the ambient temperature as possible. Thermal effects must be taken into separately.

** This specification applies only for dc power dissipation permitted by absolute maximum ratings.

Electrical Characteristics

(Electrical Characteristics at 0℃≤T_J≤125℃ and V_I=14V, I_O=500 ㎃, Unless otherwise specified)

Characteristic	Symbol	Test Condition*		S7808D			Unit
				Min.	Typ.	Max.	
Output Voltage**	V_O		T_J =25℃	7.70	8	8.30	V
		I_O=5 ㎃ ~ 1000 ㎃ V_I=10.5V ~ 23V	0℃≤T_J≤125℃	7.60	8	8.40	
Line Regulation	$\Delta V_{O(\triangle VI)}$	V_I=10.5V ~ 25V	T_J =25℃	-	6	160	㎷
		V_I=11V ~ 17V		-	2	80	
Load Regulation	$\Delta V_{O(\triangle IL)}$	I_O=5 ㎃ ~ 1000 ㎃	T_J =25℃	-	12	160	㎷
		I_O=250 ㎃ ~ 750 ㎃		-	4	80	
Quiescent Current	I_{QC}		T_J =25℃	-	4.3	8	㎃
Temperature coefficient of Output voltage	$\triangle V_O$/ $\triangle$Temp	I_O=5 ㎃	0℃≤T_J≤125℃	-	-0.8	-	㎷/℃
Quiescent Current Change	ΔI_{QC}	V_I = 10.5V ~ 25V	0℃≤T_J≤125℃	-	-	1	㎃
		I_O = 5 ㎃ ~ 1000 ㎃		-	-	0.5	
Dropout Voltage	V_{DROP}	I_O=1000 ㎃	T_J =25℃	-	2.0	-	V
Ripple Rejection	RR	f=120 ㎐ V_I =11.5V ~ 21.5V	0℃≤T_J≤125℃	55	72	-	㏈
Short-Circuit Current Limit	I_{SO}		T_J =25℃	-	0.45	-	A

* Pulse testing techniques are used to maintain the junction temperature as close to the ambient temperature as possible. Thermal effects must be taken into separately.

** This specification applies only for dc power dissipation permitted by absolute maximum ratings.

Electrical Characteristics

(Electrical Characteristics at 0℃≤T_J≤125℃ and V_I=16V, I_O=500 ㎃, Unless otherwise specified)

Characteristic	Symbol	Test Condition*		S7809D			Unit
				Min.	Typ.	Max.	
Output Voltage**	V_O		T_J =25℃	8.65	9	9.35	V
		I_O=5 ㎃ ~ 1000 ㎃ V_I=11.5V ~ 24V	0℃≤T_J≤125℃	8.55	9	9.45	
Line Regulation	$\triangle V_{O(\triangle VI)}$	V_I=11.5V ~ 27V	T_J =25℃	-	7	180	㎷
		V_I=13V ~ 19V		-	2	90	
Load Regulation	$\triangle V_{O(\triangle IL)}$	I_O=5 ㎃ ~ 1000 ㎃	T_J =25℃	-	12	180	㎷
		I_O=250 ㎃ ~ 750 ㎃		-	4	90	
Quiescent Current	I_{QC}		T_J =25℃	-	4.3	8	㎃
Temperature coefficient of Output voltage	$\triangle V_O$/ $\triangle$Temp	I_O=5 ㎃	0℃≤T_J≤125℃	-	-1.0	-	㎷/℃
Quiescent Current Change	$\triangle I_{QC}$	V_I = 11.5V ~ 27V	0℃≤T_J≤125℃	-	-	1	㎃
		I_O = 5 ㎃ ~ 1000 ㎃		-	-	0.5	
Dropout Voltage	V_{DROP}	I_O=1000 ㎃	T_J =25℃	-	2.0	-	V
Ripple Rejection	RR	f=120 ㎐ V_I =12V ~ 22V	0℃≤T_J≤125℃	55	70	-	㏈
Short-Circuit Current Limit	I_{SO}		T_J =25℃	-	0.4	-	A

* Pulse testing techniques are used to maintain the junction temperature as close to the ambient temperature as possible. Thermal effects must be taken into separately.

** This specification applies only for dc power dissipation permitted by absolute maximum ratings.

Electrical Characteristics

(Electrical Characteristics at 0℃≤T_J≤125℃ and V_I=17V, I_O=500 ㎃, Unless otherwise specified)

Characteristic	Symbol	Test Condition*		S7810D			Unit
				Min.	Typ.	Max.	
Output Voltage**	V_O		T_J =25℃	9.60	10	10.4	V
		I_O=5 ㎃ ~ 1000 ㎃ V_I=12.5V ~ 25V	0℃≤T_J≤125℃	9.50	10	10.5	
Line Regulation	$\triangle V_{O(\triangle VI)}$	V_I=12.5V ~ 28V	T_J =25℃	-	7	200	㎷
		V_I=14V ~ 20V		-	2	100	
Load Regulation	$\triangle V_{O(\triangle IL)}$	I_O=5 ㎃ ~ 1000 ㎃	T_J =25℃	-	12	200	㎷
		I_O=250 ㎃ ~ 750 ㎃		-	4	100	
Quiescent Current	I_{QC}		T_J =25℃	-	4.3	8	㎃
Temperature coefficient of Output voltage	$\triangle V_O$/ $\triangle$Temp	I_O=5 ㎃	0℃≤T_J≤125℃	-	-1.0	-	㎷/℃
Quiescent Current Change	$\triangle I_{QC}$	V_I = 12.5V ~ 28V	0℃≤T_J≤125℃	-	-	1	㎃
		I_O = 5 ㎃ ~ 1000 ㎃		-	-	0.5	
Dropout Voltage	V_{DROP}	I_O=1000 ㎃	T_J =25℃	-	2.0	-	V
Ripple Rejection	RR	f=120 ㎐ V_I =13V ~ 23V	0℃≤T_J≤125℃	55	71	-	㏈
Short-Circuit Current Limit	I_{SO}		T_J =25℃	-	0.4	-	A

* Pulse testing techniques are used to maintain the junction temperature as close to the ambient temperature as possible. Thermal effects must be taken into separately.

** This specification applies only for dc power dissipation permitted by absolute maximum ratings.

Electrical Characteristics

(Electrical Characteristics at 0℃≤T_J≤125℃ and V_I=19V, I_O=500 ㎃, Unless otherwise specified)

Characteristic	Symbol	Test Condition*		S7812D			Unit
				Min.	Typ.	Max.	
Output Voltage**	V_O		T_J =25℃	11.5	12	12.5	V
		I_O=5 ㎃ ~ 1000 ㎃ V_I=14.5V ~ 27V	0℃≤T_J≤125℃	11.4	12	12.6	
Line Regulation	$\triangle V_{O(\triangle VI)}$	V_I=14.5V ~ 30V	T_J =25℃	-	10	240	㎷
		V_I=16V ~ 22V		-	3	120	
Load Regulation	$\triangle V_{O(\triangle IL)}$	I_O=5 ㎃ ~ 1000 ㎃	T_J =25℃	-	12	240	㎷
		I_O=250 ㎃ ~ 750 ㎃		-	4	120	
Quiescent Current	I_{QC}		T_J =25℃	-	4.3	8	㎃
Temperature coefficient of Output voltage	$\triangle V_O$/ $\triangle$Temp	I_O=5 ㎃	0℃≤T_J≤125℃	-	-1.0	-	㎷/℃
Quiescent Current Change	$\triangle I_{QC}$	V_I = 14.5V ~ 30V	0℃≤T_J≤125℃	-	-	1	㎃
		I_O = 5 ㎃ ~ 1000 ㎃		-	-	0.5	
Dropout Voltage	V_{DROP}	I_O=1000 ㎃	T_J =25℃	-	2.0	-	V
Ripple Rejection	RR	f=120 ㎐ V_I =15V ~ 25V	0℃≤T_J≤125℃	55	71	-	㏈
Short-Circuit Current Limit	I_{SO}		T_J =25℃	-	0.35	-	A

* Pulse testing techniques are used to maintain the junction temperature as close to the ambient temperature as possible. Thermal effects must be taken into separately.

** This specification applies only for dc power dissipation permitted by absolute maximum ratings.

Electrical Characteristics

(Electrical Characteristics at 0℃≤T_J≤125℃ and V_I=23V, I_O=500 ㎃, Unless otherwise specified)

Characteristic	Symbol	Test Condition*		S7815D			Unit
				Min.	Typ.	Max.	
Output Voltage**	V_O		T_J =25℃	14.40	15	15.60	V
		I_O=5 ㎃ ~ 1000 ㎃ V_I=17.5V ~ 30V	0℃≤T_J≤125℃	14.25	15	15.75	
Line Regulation	$\Delta V_{O(\triangle VI)}$	V_I=17.5V ~ 30V	T_J =25℃	-	12	300	㎷
		V_I=20V ~ 26V		-	3	150	
Load Regulation	$\Delta V_{O(\triangle IL)}$	I_O=5 ㎃ ~ 1000 ㎃	T_J =25℃	-	12	300	㎷
		I_O=250 ㎃ ~ 750 ㎃		-	4	150	
Quiescent Current	I_{QC}		T_J =25℃	-	4.3	8	㎃
Temperature coefficient of Output voltage	$\triangle V_O$/ $\triangle$Temp	I_O=5 ㎃	0℃≤T_J≤125℃	-	-1.0	-	㎷/℃
Quiescent Current Change	ΔI_{QC}	V_I = 17.5V ~ 30V	0℃≤T_J≤125℃	-	-	1	㎃
		I_O = 5 ㎃ ~ 1000 ㎃		-	-	0.5	
Dropout Voltage	V_{DROP}	I_O=1000 ㎃	T_J =25℃	-	2.0	-	V
Ripple Rejection Ratio	RR	f=120 ㎐ V_I =18.5V ~ 28.5V	0℃≤T_J≤125℃	54	70		㏈
Short-Circuit Current Limit	I_{SO}		T_J =25℃	-	0.23	-	A

* Pulse testing techniques are used to maintain the junction temperature as close to the ambient temperature as possible. Thermal effects must be taken into separately.

** This specification applies only for dc power dissipation permitted by absolute maximum ratings.

Electrical Characteristics

(Electrical Characteristics at 0℃≤T_J≤125℃ and V_I=33V, I_O=500 ㎃, Unless otherwise specified)

Characteristic	Symbol	Test Condition*		S7824D			Unit
				Min.	Typ.	Max.	
Output Voltage**	V_O		T_J =25℃	23.0	24	25.0	V
		I_O=5 ㎃ ~ 1000 ㎃ V_I=27V ~ 38V	0℃≤T_J≤125℃	22.8	24	25.2	
Line Regulation	$\Delta V_{O(\triangle VI)}$	V_I=27V ~ 38V	T_J =25℃	-	18	480	㎷
		V_I=30V ~ 36V		-	6	240	
Load Regulation	$\Delta V_{O(\triangle IL)}$	I_O=5 ㎃ ~ 1000 ㎃	T_J =25℃	-	12	480	㎷
		I_O=250 ㎃ ~ 750 ㎃		-	4	240	
Quiescent Current	I_{QC}		T_J =25℃	-	4.6	8	㎃
Temperature coefficient of Output voltage	$\triangle V_O$/ $\triangle$Temp	I_O=5 ㎃	0℃≤T_J≤125℃	-	-1.5	-	㎷/℃
Quiescent Current Change	ΔI_{QC}	V_I = 27V ~ 38V	0℃≤T_J≤125℃	-	-	1	㎃
		I_O = 5 ㎃ ~ 1000 ㎃		-	-	0.5	
Dropout Voltage	V_{DROP}	I_O=1000 ㎃	T_J =25℃	-	2.0	-	V
Ripple Rejection Ratio	RR	f=120 Hz V_I =28V ~ 38V	0℃≤T_J≤125℃	50	66	-	dB
Short-Circuit Current Limit	I_{SO}		T_J =25℃	-	0.15	-	A

* Pulse testing techniques are used to maintain the junction temperature as close to the ambient temperature as possible. Thermal effects must be taken into separately.

** This specification applies only for dc power dissipation permitted by absolute maximum ratings.

The AUK Corp. products are intended for the use as components in general electronic equipment (Office and communication equipment, measuring equipment, home appliance, etc.).

Please make sure that you consult with us before you use these AUK Corp. products in equipments which require high quality and / or reliability, and in equipments which could have major impact to the welfare of human life(atomic energy control, airplane, spaceship, transportation, combustion control, all types of safety device, etc.). AUK Corp. cannot accept liability to any damage which may occur in case these AUK Corp. products were used in the mentioned equipments without prior consultation with AUK Corp..

Specifications mentioned in this publication are subject to change without notice.