Silicon Standard Recovery Diode

V_{RRM} = 100 V - 600 V
I_F =70 A

Features

- High Surge Capability
- Types from 100 V to 600 V V_{RRM}
- Not ESD Sensitive

Note:

1. Standard polarity: Stud is cathode.
2. Reverse polarity (R): Stud is anode.
3. Stud is base.

DO-5 Package



RoHS COMPLIANT

REACH COMPLIANCE

Maximum ratings, at T_j = 25 °C, unless otherwise specified ("R" devices have leads reversed)

Parameter	Symbol	Conditions	S70B (R)	S70D (R)	S70G (R)	S70J (R)	Unit
Repetitive peak reverse voltage	V_{RRM}		100	200	400	600	V
RMS reverse voltage	V_{RMS}		70	140	280	420	V
DC blocking voltage	V_{DC}		100	200	400	600	V
Continuous forward current	I_F	$T_C \leq 140$ °C	70	70	70	70	A
Surge non-repetitive forward current, Half Sine Wave	$I_{F,SM}$	T_C = 25 °C, t_p = 8.3 ms	1250	1250	1250	1250	A
Operating temperature	T_j		-55 to 150	-55 to 150	-55 to 150	-55 to 150	°C
Storage temperature	T_{stg}		-55 to 150	-55 to 150	-55 to 150	-55 to 150	°C

Electrical characteristics, at Tj = 25 °C, unless otherwise specified

Parameter	Symbol	Conditions	S70B (R)	S70D (R)	S70G (R)	S70J (R)	Unit
Diode forward voltage	V_F	I_F = 70 A, T_j = 25 °C	1.1	1.1	1.1	1.1	V
Reverse current	I_R	V_R = 100 V, T_j = 25 °C	10	10	10	10	µA
		V_R = 100 V, T_j = 180 °C	15	15	15	9	mA
Thermal characteristics							
Thermal resistance, junction - case	R_{thJC}		0.65	0.65	0.65	0.65	°C/W

Figure .1-Typical Forward Characteristics

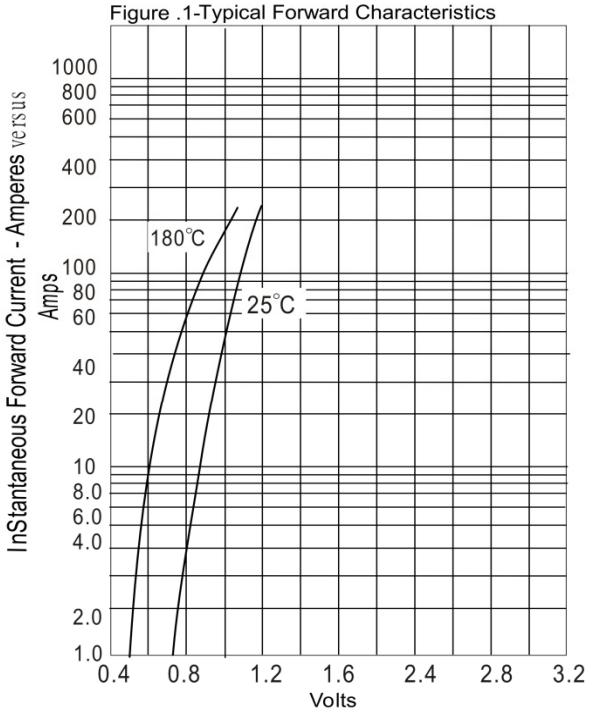

Instantaneous Forward Voltage - Volts

Figure .2-Forward Derating Curve

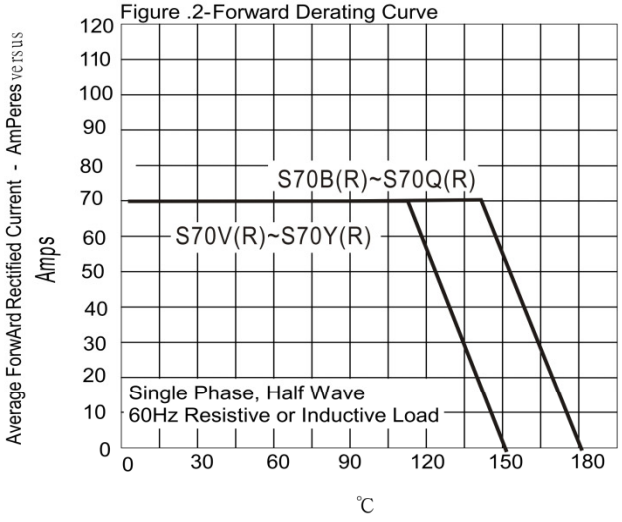

Case Temperature - °C

Figure .3-Peak Forward Surge Current

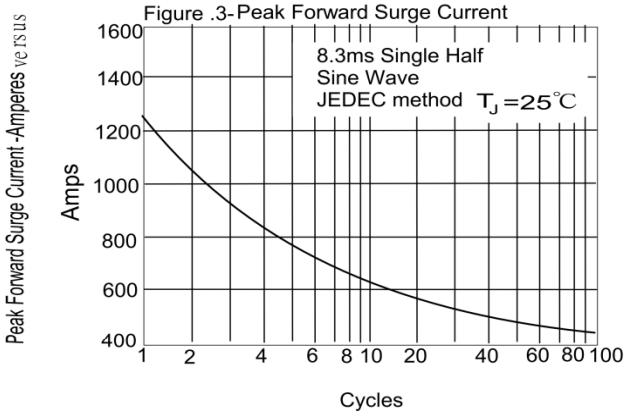

Number Of Cycles At 60Hz - Cycles

Figure .4-Typical Reverse Characteristics

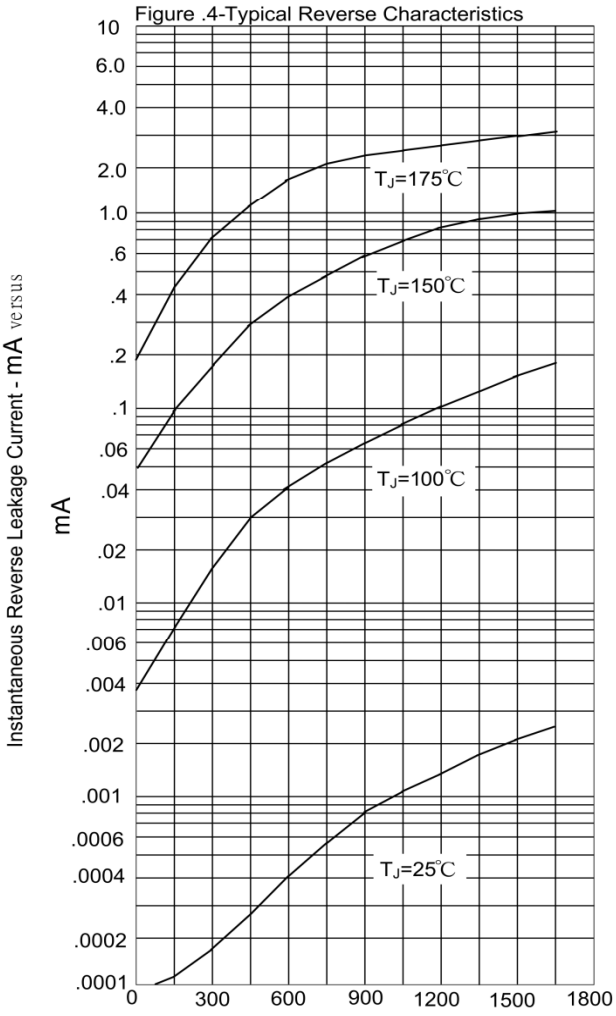

Reverse Voltage - Volts

Package dimensions and terminal configuration

Product is marked with part number and terminal configuration.

DO- 5 (DO-203AB)

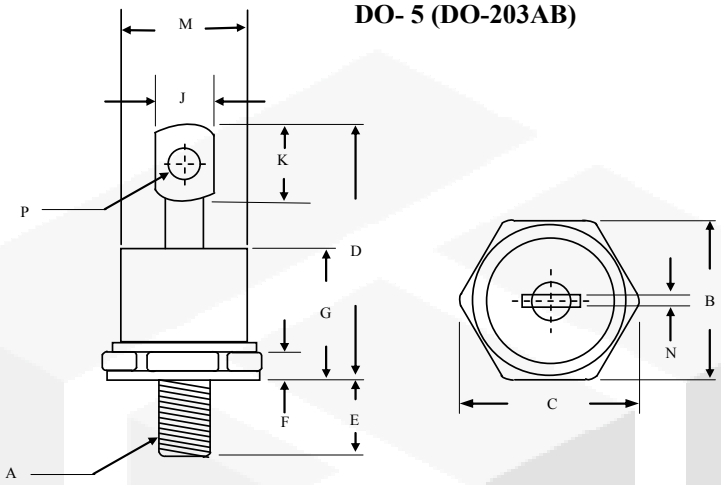

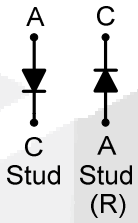

	Inches		Millimeters	
	Min	Max	Min	Max
A	1/4 –28 UNF			
B	0.669	0.687	17.19	17.44
C	-----	0.794	-----	20.16
D	-----	1.020	-----	25.91
E	0.422	0.453	10.72	11.50
F	0.115	0.200	2.93	5.08
G	-----	0.460	-----	11.68
J	-----	0.280	-----	7.00
K	0.236	-----	6.00	-----
M	-----	0.589	-----	14.96
N	-----	0.063	-----	1.60
P	0.140	0.175	3.56	4.45