Photo IC for optical switch
S6841, S8119

Photo IC with optical switch functions

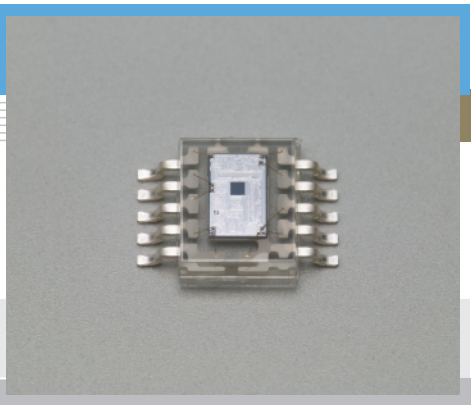

S6841 and S8119 are specifically designed for optical switches. A transmission mode or reflection mode optical switch can be easily configured when used in combination with an LED.

Features

- Miniature transparent plastic package (4.5 × 5.5 mm)
- Having following function at each terminal
  - · Operation and margin display terminal
  - · Synchronous/asynchronous switching terminal
  - · Output logic switching terminal
- Built-in short-circuit protective circuit
- S6841: High sensitivity (0.05 μW/mm² Typ.)
  S8119: Large allowable background light level (10000 *lx* Typ.)

Applications

- Optical switch

■ Absolute maximum ratings (Ta=25 °C)

Parameter		Symbol	Value	Unit
Supply voltage		Vcc	-0.3 to +7	V
Power dissipation *1		P	250	mW
Output voltage	Terminal ②④⑤⑩	Vout	-0.3 to Vcc	V
Input voltage	Terminal ③⑧⑨	Vin	-0.3 to +6	
Operating temperature		Topr	-25 to +60	°C
Storage temperature		Tstg	-40 to +100	°C
Soldering		-	230 °C , 3 s	-

*1: Derate power dissipation at a rate of 3.3 mW/°C above Ta=25 °C

■ Electrical and optical characteristics (Ta=25 °C, Vcc=5 V, unless otherwise noted)

Parameter		Symbol	Condition	S6841			S8119			Unit
				Min.	Typ.	Max.	Min.	Typ.	Max.	
Spectral response range		λ		-	380 to 1120	-	-	380 to 1120	-	nm
Peak sensitivity wavelength		λp		-	820	-	-	820	-	nm
Supply voltage		Vcc		4.5	5.0	5.5	4.5	5.0	5.5	V
Current consumption		Icc	OUT · LED terminals open	-	5.0	7.0	-	5.0	7.0	mA
OUT terminal output current	ON	Ion	SOURCE, Vout=2.5 V	60	-	-	60	-	-	μA
	OFF	Ioff	SOURCE, Vout=0 V	-	-	1.0	-	-	1.0	μA
LED terminal output	Current (LED is on)	Iledn	SOURCE, Vled=2.5 V	570	650	725	570	650	725	μA
	Current (LED is off)	Iledf	SOURCE, Vled=0 V	-	-	10	-	-	10	μA
	Pulse cycle	Tp1	*2	112	160	208	112	160	208	μs
	Pulse width	Tw1		3.5	5	6.5	3.5	5	6.5	μs
Signal light (in asynchronous mode)	Pulse cycle	Tp2		60	-	100	60	-	100	μs
	Pulse width	Tw2		4	-	6	4	-	6	μs
DSP terminal output current		Idsp	SINK, Vdsp=1.0 V	0.8	-	1.6	0.8	-	1.6	mA
MRG terminal	Setup level	M		-	200	-	-	200	-	%
	Output current	Imrg	SINK, Vmrg=1.0 V	2.0	-	3.6	2.0	-	3.6	mA
SW terminal	Input L current	Iswl	SOURCE, Vsw=0 V	-	-	100	-	-	100	μA
	Input H current	Iswh	SINK, Vsw=5 V	-	-	100	-	-	100	μA
	Input H voltage	Vswh		2	-	-	2	-	-	V
	Input L voltage	Vswl		-	-	0.8	-	-	0.8	V
INV terminal	Input L current	Iinvl	SOURCE, Vinv=0 V	-	-	100	-	-	100	μA
	Input H current	Iinvh	SINK, Vinv=5 V	-	-	100	-	-	100	μA
	Input H voltage	Vinvh		2	-	-	2	-	-	V
	Input L voltage	Vinvl		-	-	0.8	-	-	0.8	V
Threshold light level		Eep	No background light λ=850 nm	-	0.05	0.1	-	0.1	0.2	μW/mm²
Hysterisis		Hys		0.7	0.8	0.9	0.7	0.8	0.9	-
Allowable background light level		Ex	*3	3500	5000	-	6000	10000	-	*lx*
Propagation delay time	Synchronous	Tpd1on	*4 Shield to input	-	-	1100	-	650	900	μs
		Tpd1of	*4 Input to shield	-	-	1100	-	650	900	μs
	Asynchronous	Tpd2on	Shield to input	-	-	1200	-	-	1000	μs
		Tpd2of	Input to shield	-	-	1300	-	-	1300	μs
Input signal level		Eepp	*5	-	-	1				μW/mm²

SOLID STATE DIVISION

*2: Pulse cycle, pulse width: See below.

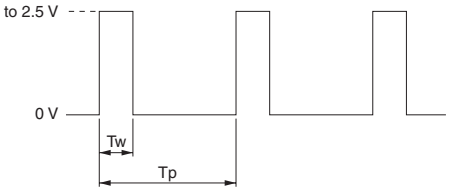

LED terminal output waveform

KPICC0060EA

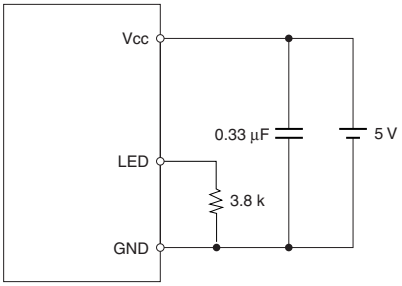

Measurement circuit

KPICC0061EA

*3: Allowable background light level

This is defined as the background light level on the active area at which the photo IC sensitivity* drops by 20 %.

* Sensitivity is the reciprocal of light level, which is constantly detected as a signal.

If background disturbance light strikes a part on the package (other than the active area) of S6841, this may lower the allowable background light level. Use light-impervious tape to provide light-shielding over the shaded area of the package as shown below. Light-shielding is unnecessary for S8119.

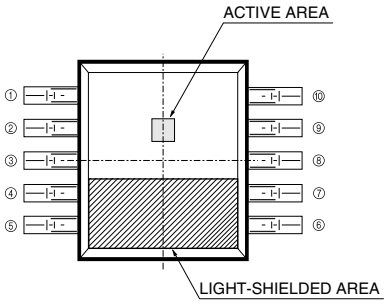

KPICC0067EA

Light-shielded area (S6841)

*4: H→L, L→H propagation delay time

The optical system is adjusted so that the Vo terminal output becomes “Low” voltage when the switch shown in the circuit below is off. (S6841 is then measured with a signal light input of 1 µW/mm^2 illuminance.)

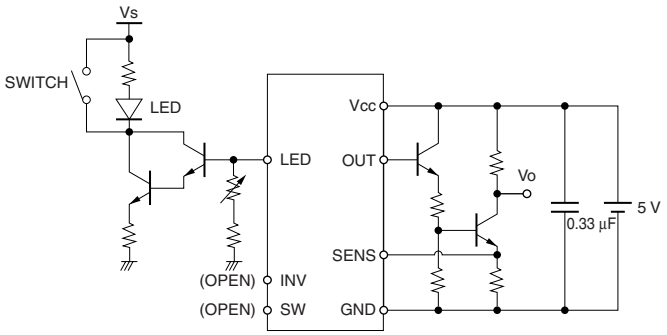

Measurement circuit

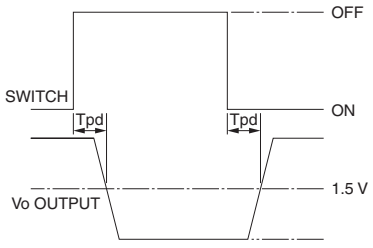

KPICC0062EA

*5: This is the input signal light level for the propagation delay time to stay within specifications.

If the input signal light exceeds this level, the propagation delay time may increase.

■ Block diagram

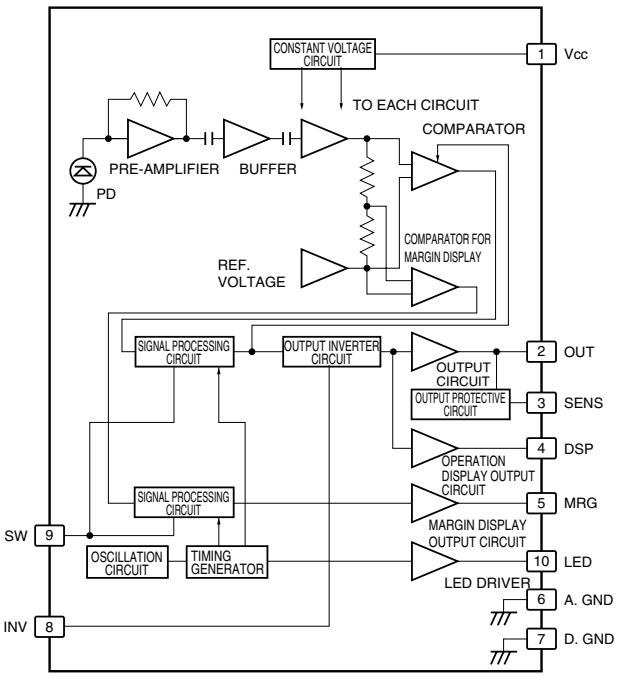

KPICC0048EA

■ Truth table

INV terminal: HIGH

Input	OUT output	DSP output	MRG output
Light ON	ON	ON	ON
Light OFF	OFF	OFF	OFF

INV terminal: LOW

Input	OUT output	DSP output	MRG output
Light ON	OFF	OFF	ON
Light OFF	ON	ON	OFF

SW terminal	Detection Method
High	Synchronous
Low	Asynchronous

■ Terminal configuration

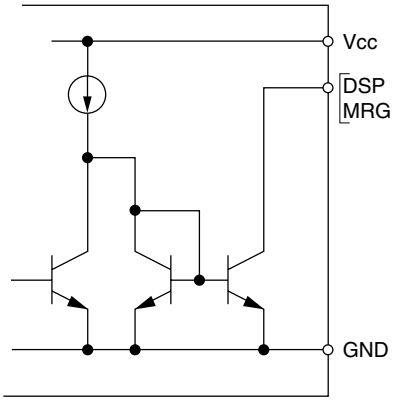

OPERATION DISPLAY TERMINAL
MARGIN DISPLAY TERMINAL

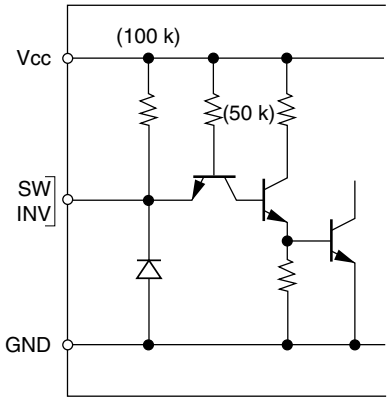

DETECTION METHOD SWITCHING TERMINAL
OUTPUT SWITCHING TERMINAL

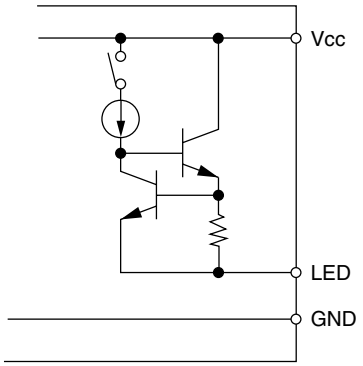

LED TERMINAL

KPICC0063EA

■ OUT terminal and SENS terminal configurations and recommended external short-circuit protective circuit

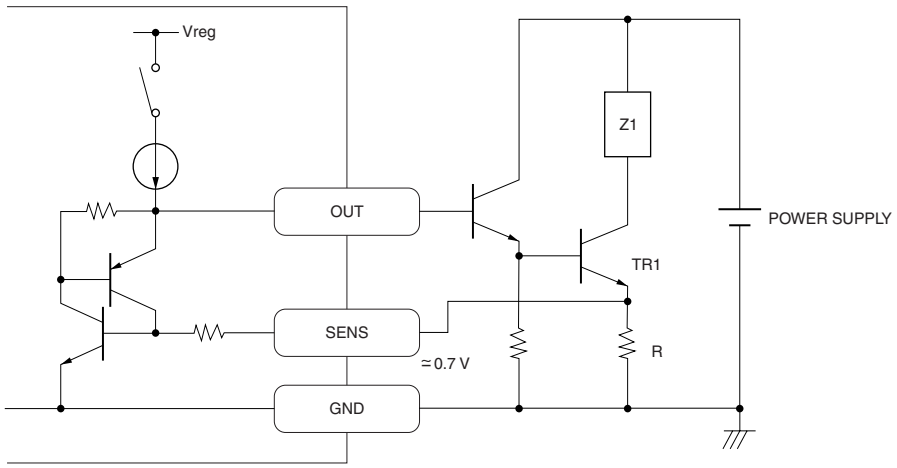

KPICC0064EA

■ Dimensional outline (unit: mm)

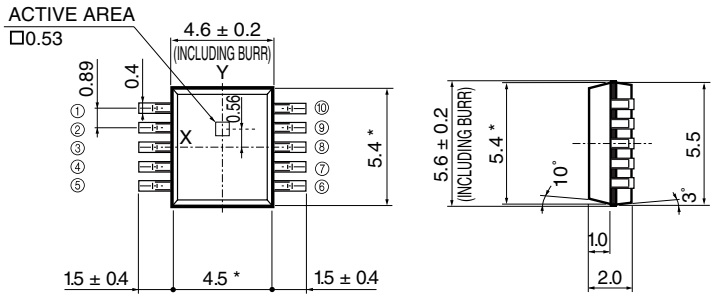

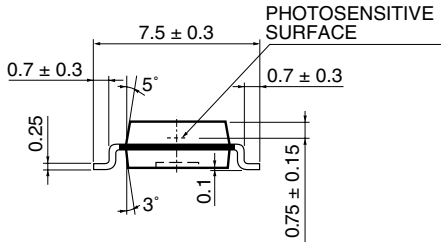

① Vcc
② OUT (OUTPUT)
③ SENS (SHORT-CIRCUIT PROTECTIVE INPUT FOR OUTPUT TERMINAL LOAD)
④ DSP (OPERATION DISPLAY)
⑤ MRG (MARGIN DISPLAY)
⑥ A. GND
⑦ D. GND
⑧ INV (OUTPUT LOGIC SWITCHING)
⑨ SW (SYNCHRONOUS, ASYNCHRONOUS SWITCHING)
⑩ LED

Tolerance unless otherwise noted: ±0.1, ±2°
Shaded area indicates burr.
Chip position accuracy
This chip is mounted with the following accuracy with respect to the package dimensions marked *
X, Y ≤ ±0.2

KPICA0020EB

HAMAMATSU
Information furnished by HAMAMATSU is believed to be reliable. However, no responsibility is assumed for possible inaccuracies or omissions.
Specifications are subject to change without notice. No patent rights are granted to any of the circuits described herein. ©2001 Hamamatsu Photonics K.K.

HAMAMATSU PHOTONICS K.K., Solid State Division
1126-1 Ichino-cho, Higashi-ku, Hamamatsu City, 435-8558 Japan, Telephone: (81) 53-434-3311, Fax: (81) 53-434-5184, http://www.hamamatsu.com
U.S.A.: Hamamatsu Corporation: 360 Foothill Road, P.O.Box 6910, Bridgewater, N.J. 08807-0910, U.S.A., Telephone: (1) 908-231-0960, Fax: (1) 908-231-1218
Germany: Hamamatsu Photonics Deutschland GmbH: Arzbergerstr. 10, D-82211 Herrsching am Ammersee, Germany, Telephone: (49) 08152-3750, Fax: (49) 08152-2658
France: Hamamatsu Photonics France S.A.R.L.: 19, Rue du Saule Trapu, Parc du Moulin de Massy, 91882 Massy Cedex, France, Telephone: 33-(1) 69 53 71 00, Fax: 33-(1) 69 53 71 10
United Kingdom: Hamamatsu Photonics UK Limited: 2 Howard Court, 10 Tewin Road, Welwyn Garden City, Hertfordshire AL7 1BW, United Kingdom, Telephone: (44) 1707-294888, Fax: (44) 1707-325777
North Europe: Hamamatsu Photonics Norden AB: Smidesvägen 12, SE-171 41 Solna, Sweden, Telephone: (46) 8-509-031-00, Fax: (46) 8-509-031-01
Italy: Hamamatsu Photonics Italia S.R.L.: Strada della Moia, 1/E, 20020 Arese, (Milano), Italy, Telephone: (39) 02-935-81-733, Fax: (39) 02-935-81-741

Cat. No. KPIC1019E02
Jul. 2001 DN