# Si photodiode
# S5668-11/-34

## High sensitivity X-ray detectors



### Features

- 16-element photodiode array with scintillator
  S5668-11: CsI
  S5668-34: ceramic scintillator
- High sensitivity compared with CWO
  S5668-11: 3.2 times
  S5668-34: 1.8 times
- S5668-34: high reliability
  less afterglow, low cross-talk, low capacitance

### Applications

- X-ray fluorescence analysis
- X-ray detection

■ Absolute maximum ratings (Ta=25 °C)

| Parameter | Symbol | Value | Unit |
|---|---|---|---|
| Reverse voltage | $V_R$ Max. | 10 | V |
| Operating temperature | Topr | -10 to +60 | °C |
| Storage temperature | Tstg | -20 to +70 | °C |

■ Photodiode electrical and optical characteristics (Ta=25 °C, per element)

| Parameter | Symbol | Condition | S5668-11 | | S5668-34 | | Unit |
|---|---|---|---|---|---|---|---|
| | | | Typ. | Max. | Typ. | Max. | |
| Spectral response range | λ | | 320 to 1100 | - | 320 to 1000 | - | nm |
| Peak sensitivity wavelength | λp | | 960 | - | 800 | - | nm |
| Photo sensitivity | S | λ=540 nm | 0.31 | - | 0.38 | - | A/W |
| | | λ=λp | 0.56 | - | 0.54 | - | A/W |
| X-ray sensitivity | Sx | X-ray tube voltage= 120 kV * | 5.8 | - | 2.5 | - | nA |
| Dark current | $I_D$ | $V_R$=10 mV | 1 | 10 | 1 | 30 | pA |
| Terminal capacitance | Ct | $V_R$=0 V, f=10 kHz | 300 | 550 | 35 | 70 | pF |

* Tube current=1.0 mA, aluminum filter: t=6 mm, distance=830 mm

Note) Sensitivity values are just for your reference. Actual sensitivity values may vary depending on an equipment type and measurement conditions.

SOLID STATE DIVISION

■ Dimensional outlines (unit: mm)

S5668-11

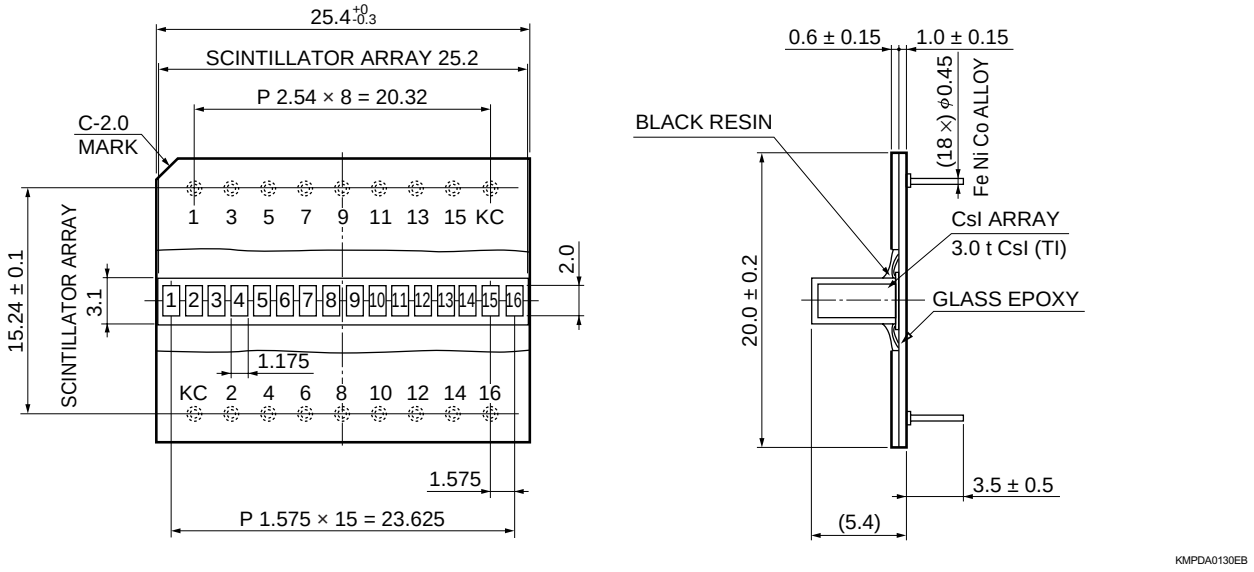


KMPDA0130EB

S5668-34

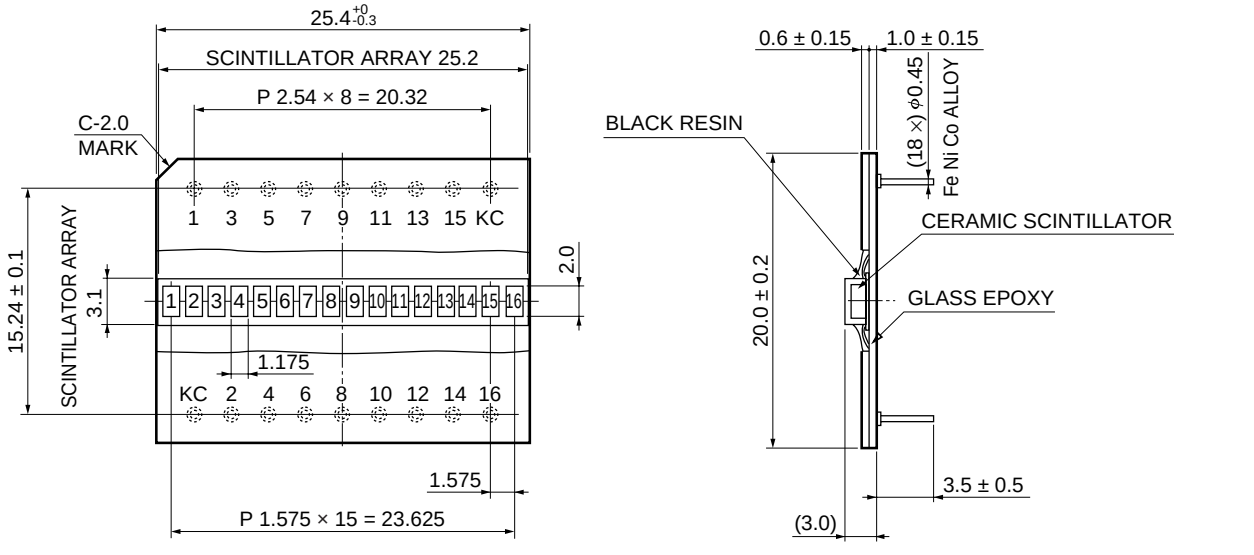


KMPDA0096EB

HAMAMATSU

Information furnished by HAMAMATSU is believed to be reliable. However, no responsibility is assumed for possible inaccuracies or omissions.
Specifications are subject to change without notice. No patent rights are granted to any of the circuits described herein. ©2007 Hamamatsu Photonics K.K.

HAMAMATSU PHOTONICS K.K., Solid State Division
1126-1 Ichino-cho, higashi-ku, Hamamatsu City, 435-8558 Japan, Telephone: (81) 53-434-3311, Fax: (81) 53-434-5184, www.hamamatsu.com
U.S.A.: Hamamatsu Corporation: 360 Foothill Road, P.O.Box 6910, Bridgewater, N.J. 08807-0910, U.S.A., Telephone: (1) 908-231-0960, Fax: (1) 908-231-1218
Germany: Hamamatsu Photonics Deutschland GmbH: Arzbergerstr. 10, D-82211 Herrsching am Ammersee, Germany, Telephone: (49) 08152-3750, Fax: (49) 08152-2658
France: Hamamatsu Photonics France S.A.R.L.: 19, Rue du Saule Trapu, Parc du Moulin de Massy, 91882 Massy Cedex, France, Telephone: 33-(1) 69 53 71 00, Fax: 33-(1) 69 53 71 10
United Kingdom: Hamamatsu Photonics UK Limited: 2 Howard Court, 10 Tewin Road, Welwyn Garden City, Hertfordshire AL7 1BW, United Kingdom, Telephone: (44) 1707-294888, Fax: (44) 1707-325777
North Europe: Hamamatsu Photonics Norden AB: Smidesvägen 12, SE-171 41 Solna, Sweden, Telephone: (46) 8-509-031-00, Fax: (46) 8-509-031-01
Italy: Hamamatsu Photonics Italia S.R.L.: Strada della Moia, 1/E, 20020 Arese, (Milano), Italy, Telephone: (39) 02-935-81-733, Fax: (39) 02-935-81-741

Cat. No. KMPD1050E06
May 2007 DN