TAYCHIPST

FAST RECOVERY RECTIFIERS

S5295B THRU S5295J

100V-600V 0.5A

FEATURES

* High current capability
* High surge current capability
* High reliability
* Low reverse current
* Low forward voltage drop
* Pb / RoHS Free

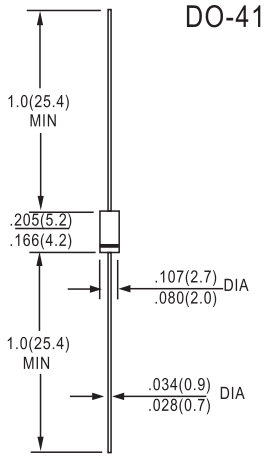

Dimensions in inches and (millimeters)

Mechanical Data

* Case : DO-41 Molded plastic
* Epoxy : UL94V-O rate flame retardant
* Lead : Axial lead solderable per MIL-STD-202, Method 208 guaranteed
* Polarity : Color band denotes cathode end
* Mounting position : Any
* Weight : 0.339 gram

MAXIMUM RATINGS AND ELECTRICAL CHARACTERISTICS

Rating at 25 °C ambient temperature unless otherwise specified.
Single phase, half wave, 60 Hz, resistive or inductive load.
For capacitive load, derate current by 20%.

RATING	SYMBOL	S5295B	S5295G	S5295J	UNIT
Maximum Repetitive Peak Reverse Voltage	V_{RRM}	100	400	600	V
Maximum Reverse Voltage (DC)	V_R	75	300	500	V
Maximum Average Forward Current	$I_{F(AV)}$	0.5			A
Maximum Peak One Cycle Surge Forward Current (50 Hz, Non-Repetitive)	I_{FSM}	30			A
Maximum Peak Forward Voltage at I_F = 1.0 A	V_F	1.5			V
Maximum Repetitive Peak Reverse Current at V_{RRM}	I_R	10			µA
Maximum Reverse Recovery Time (Note 1)	Trr	1.5			µs
Junction Temperature Range	T_J	- 40 to + 125			°C
Storage Temperature Range	T_{STG}	- 40 to + 125			°C

Notes :

(1) Reverse Recovery Test Condition : I_F = 20 mA, I_R = 1mA

FIG.1 - REVERSE RECOVERY TIME CHARACTERISTIC AND TEST CIRCUIT DIAGRAM

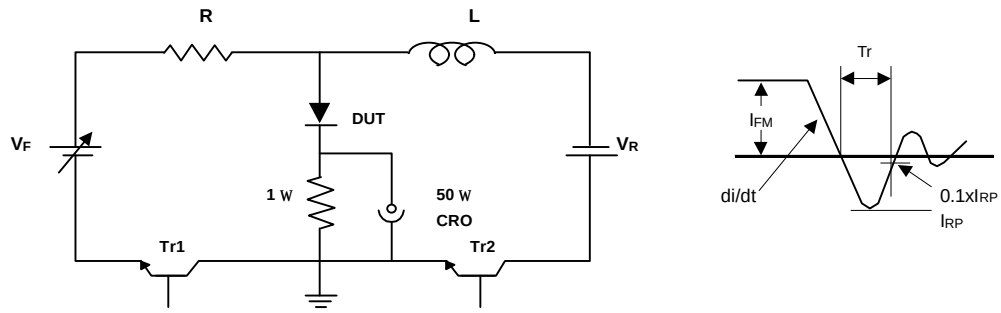

FIG.2 - DERATING CURVE FOR OUTPUT RECTIFIED CURRENT

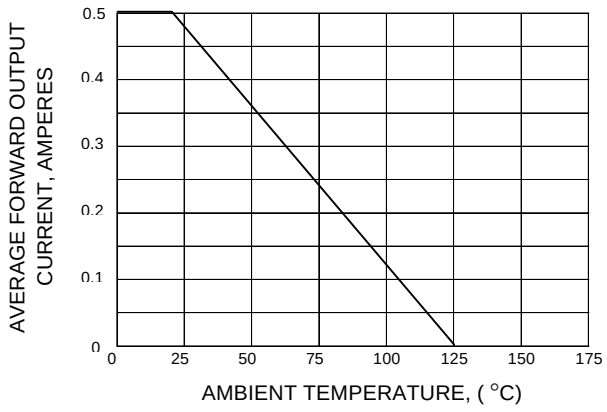

FIG.3 - MAXIMUM NON-REPETITIVE PEAK FORWARD SURGE CURRENT

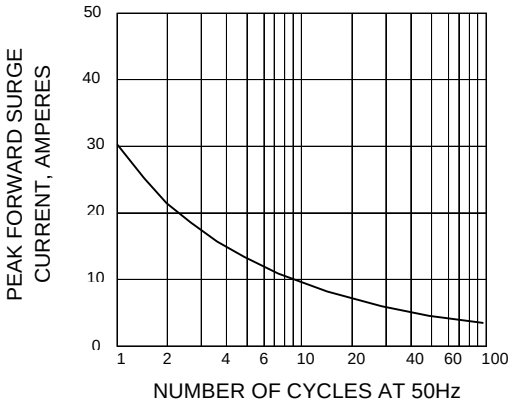

FIG.4 - TYPICAL FORWARD CHARACTERISTICS

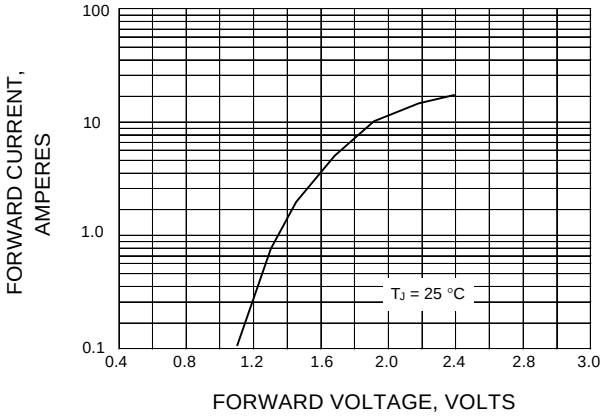

FIG.5 - TYPICAL REVERSE CHARACTERISTICS

