S3C852B/P852B

8-BIT CMOS
MICROCONTROLLERS
USER'S MANUAL

Revision 0

SAMSUNG ELECTRONICS

Important Notice

Information in this publication has been carefully checked and is believed to be entirely accurate at the time of publication. SAMSUNG assumes no responsibility, however, for possible errors or omissions, or for any consequences resulting from the use of the information contained herein.

SAMSUNG reserves the right to make changes in its products or product specifications with the intent to improve function or design at any time and without notice and is not required to update this documentation to reflect such changes.

This publication does not convey to a purchaser of semiconductor devices described herein any license under the patent rights of SAMSUNG or others.

SAMSUNG makes no warranty, representation, or guarantee regarding the suitability of its products for any particular purpose, nor does SAMSUNG assume any liability arising out of the application or use of any product or circuit and specifically disclaims any and all liability, including without limitation any consequential or incidental damages.

"Typical" parameters can and do vary in different applications. All operating parameters, including "Typicals" must be validated for each customer application by the customer's technical experts.

SAMSUNG products are not designed, intended, or authorized for use as components in systems intended for surgical implant into the body, for other applications intended to support or sustain life, or for any other application in which the failure of the SAMSUNG product could create a situation where personal injury or death may occur.

Should the Buyer purchase or use a SAMSUNG product for any such unintended or unauthorized application, the Buyer shall indemnify and hold SAMSUNG and its officers, employees, subsidiaries, affiliates, and distributors harmless against all claims, costs, damages, expenses, and reasonable attorney fees arising out of, either directly or indirectly, any claim of personal injury or death that may be associated with such unintended or unauthorized use, even if such claim alleges that SAMSUNG was negligent regarding the design or manufacture of said product.

S3C852B/P852B 8-Bit CMOS Microcontrollers
User's Manual, Revision 0
Publication Number: 20-S3-C852B/P852B-092002

© 2002 Samsung Electronics

All rights reserved. No part of this publication may be reproduced, stored in a retrieval system, or transmitted in any form or by any means, electric or mechanical, by photocopying, recording, or otherwise, without the prior written consent of Samsung Electronics.

All semiconductor products are designed and manufactured in accordance with the highest quality standards and objectives.

Samsung Electronics Co., Ltd.
San #24 Nongseo-Ri, Giheung-Eup
Yongin-City, Gyeonggi-Do, Korea
C.P.O. Box #37, Suwon 440-900

TEL: (82)-(31)-209-1934
FAX: (82)-(31)-209-1899
Home Page: http://www.samsungsemi.com

Printed in the Republic of Korea

Preface

The *S3C852B/P852B Microcontroller User's Manual* is designed for application designers and programmers who are using the S3C852B/P852B microcontroller for application development.
It is organized in two main parts:

Part I Programming Model

Part II Hardware Descriptions

Part I contains software-related information to familiarize you with the microcontroller's architecture, programming model, instruction set, and interrupt structure. It has six chapters:

Chapter 1	Product Overview	Chapter 4	Control Registers
Chapter 2	Address Spaces	Chapter 5	Interrupt Structure
Chapter 3	Addressing Modes	Chapter 6	Instruction Set

Chapter 1, "Product Overview," is a high-level introduction to S3C851B/P851B with general product descriptions, as well as detailed information about individual pin characteristics and pin circuit types.

Chapter 2, "Address Spaces," describes program and data memory spaces, the internal register file, and register addressing. Chapter 2 also describes working register addressing, as well as system stack and user-defined stack operations.

Chapter 3, "Addressing Modes," contains detailed descriptions of the addressing modes that are supported by the S3C8-series CPU.

Chapter 4, "Control Registers," contains overview tables for all mapped system and peripheral control register values, as well as detailed one-page descriptions in a standardized format. You can use these easy-to-read, alphabetically organized, register descriptions as a quick-reference source when writing programs.

Chapter 5, "Interrupt Structure," describes the S3C852B/P852B interrupt structure in detail and further prepares you for additional information presented in the individual hardware module descriptions in Part II.

Chapter 6, "Instruction Set," describes the features and conventions of the instruction set used for all KS88-series microcontrollers. Several summary tables are presented for orientation and reference. Detailed descriptions of each instruction are presented in a standard format. Each instruction description includes one or more practical examples of how to use the instruction when writing an application program.

A basic familiarity with the information in Part I will help you to understand the hardware module descriptions in Part II. If you are not yet familiar with the S3C8-series microcontroller family and are reading this manual for the first time, we recommend that you first read Chapters 1–3 carefully. Then, briefly look over the detailed information in Chapters 4, 5, and 6. Later, you can reference the information in Part I as necessary.

Part II "hardware Descriptions," has detailed information about specific hardware components of the S3C851B/P851B microcontroller. Also included in Part II are electrical, mechanical, and OTP. It has 13 chapters:

Chapter 7	Clock Circuits	Chapter 14	Caller ID Block
Chapter 8	RESET and Power-Down	Chapter 15	A/D Converter
Chapter 9	I/O Ports	Chapter 16	Extermal Interface
Chapter 10	Basic Timer and Timer 0	Chapter 17	Electrical Data
Chapter 11	Timer 1	Chapter 18	Mechanical Data
Chapter 12	Watch Timer	Chapter 19	S3P852B OTP
Chapter 13	Serial I/O Port		

Two order forms are included at the back of this manual to facilitate customer order for S3C852B/P852B microcontrollers: the Mask ROM Order Form, and the Mask Option Selection Form. You can photocopy these forms, fill them out, and then forward them to your local Samsung Sales Representative.

Table of Contents

Part I — Programming Model

Chapter 1 Product Overview

SAM87RC Product Family 1-1
S3C852B Microcontroller 1-1
OTP 1-2
Features 1-3
Block Diagram 1-4
Pin Assignments 1-5
Pin Descriptions 1-6
Pin Circuits 1-10

Chapter 2 Address Spaces

Overview 2-1
Program Memory (ROM) 2-2
Register Architecture 2-4
    Working Registers 2-8
    Using the Register Pointers 2-9
Register Addressing 2-12
    Common Working Register Area (C0H–CFH) 2-14
    4-Bit Working Register Addressing 2-16
    8-Bit Working Register Addressing 2-18
System and User Stacks 2-20

Chapter 3 Addressing Modes

Overview 3-1
    Register Addressing Mode (R) 3-2
    Indirect Register Addressing Mode (Ir) 3-3
    Indexed Addressing Mode (X) 3-7
    Direct Address Mode (DA) 3-10
    Indirect Address Mode (IA) 3-12
    Relative Address Mode (RA) 3-13
    Immediate Mode (IM) 3-14

Table of Contents (Continued)

Chapter 4 Control Registers

Overview 4-1

Chapter 5 Interrupt Structure

Overview 4-1
- Interrupt Types 4-2
- S3C852B/P852B Interrupt Structure 4-3
- Interrupt Vector Addresses 4-4
- Enable/Disable Interrupt Instructions (EI, DI) 4-6
- System-Level Interrupt Control Registers 4-6
- Interrupt Processing Control Points 4-7

System Mode Register (SYM) 4-8
- Interrupt Mask Register (IMR) 4-9
- Interrupt Priority Register (IPR) 4-10
- Interrupt Request Register (IRQ) 4-12
- Interrupt Pending Function Types 4-13
- Interrupt Source Polling Sequence 4-14
- Interrupt Service Routines 4-14
- Generating Interrupt Vector Addresses 4-15
- Nesting of Vectored Interrupts 4-15
- Instruction Pointer (IP) 4-15
- Fast Interrupt Processing 4-16

Chapter 6 Instruction Set

Overview 6-1
- Data Types 6-1
- Register Addressing 6-1
- Addressing Modes 6-1
- Flags Register (FLAGS) 6-6
- Flag Descriptions 6-7
- Instruction Set Notation 6-8
- Condition Codes 6-12
- Instruction Descriptions 6-13

Table of Contents (Continued)

Part II Hardware Descriptions

Chapter 7 Clock Circuits

Overview 7-1
- System Clock Circuit 7-1
- Main Oscillator Circuits 7-2
- Sub Oscillator Circuits 7-2
- Clock Status During Power-Down Modes 7-2
- System Clock Control Register (CLKCON) 7-4
- Oscillator Control Register (OSCCON) 7-5
- Switching the CPU Clock 7-6
- Stop Control Register (STPCON) 7-7

Phase Locked Loop (PLL) 7-8
- Main Clock Generation 7-8
- Doubling Main Clock Frequency 7-8

Chapter 8 RESET and Power-Down

System Reset 8-1
- Overview 8-1
- Normal Mode Reset Operation 8-2
- Rom-Less Mode Reset Operation 8-2
- Hardware RESET Values 8-3

Power-Down Modes 8-6
- Stop Mode 8-6
- Idle Mode 8-7

Chapter 9 I/O Ports

Overview 9-1
- Port Data Registers 9-3
- Port 0 9-4
- Port 1 9-7
- Port 2 9-10
- Port 3 9-11
- Port 4 9-13
- Port 5 9-14
- Port 6 9-15
- Port 7 9-16
- Port 8 9-17
- Port 9 9-18
- Port 10 9-19

Table of Contents (Continued)

Chapter 10 Basic Timer & Timer 0

Module Overview....10-1
Basic Timer Control Register (BTCON)....10-2
Basic Timer Function Description....10-3
Timer 0 Control Register (T0CON)....10-5
Timer 0 Function Description....10-7

Chapter 11 Timer 1

One 16-Bit Timer Mode (Timer 1)....11-1
Overview....11-1
Function Description....11-1
Block Diagram....11-3
Two 8-Bit Timers Mode (Timer A and B)....11-4
Overview....11-4
Function Description....11-7

Chapter 12 Watch Timer

Overview....12-1
Watch Timer Control Register (WTCON)....12-2
Watch Timer Circuit Diagram....12-3

Chapter 13 Serial I/O Port

Overview....13-1
Programming Procedure....13-1
Sio Control Register (SIOCON)....13-2
Sio Prescaler Register (SIOPS)....13-3
Block Diagram....13-3
Serial I/O Timing Diagrams....13-4

Table of Contents (Continued)

Chapter 14Caller ID Block

Overview....14-1
Function Description of CID Block....14-3
Analog Input and Preprocessor....14-3
CAS Tone Detection....14-5
FSK Data Reception....14-6
Stutter Dial Tone(SDT) Detector....14-8
Ring or Line Reversal Detector....14-9
Tone Generator....14-11
Melody Generator....14-16
Power-Down Mode of CID Block....14-18
Interrupt of CID Block....14-18
Register Maps of CID Block....14-19

Chapter 15 A/D Converter

Overview....15-1
Function Description....15-1
A/D Converter Control Register (ADCON)....15-2
Internal Reference Voltage Levels....15-3
Conversion Timing....15-4
Internal A/D Conversion Procedure....15-5

Chapter 16 External Interface

Overview....16-1
Configuration Options for External Program Memory....16-3
External Interface Control Registers....16-4
System Mode Register (SYM)....16-4
External Memory Timing Register (EMT)....16-5
Port 3 Alternative Function Select Register (P3AFS)....16-6
Port 4 Control Register (P4CON)....16-6
Port 5 Control Register (P5CON)....16-6
Port 6 Control Register (P6CON)....16-6
Configuring Separate External Program and Data Memory Areas....16-8
External Bus Operations....16-9
Sam8 Instruction Execution Timing Diagrams....16-15

Table of Contents (Concluded)

Chapter 17 Electrical Data

Overview 17-1

Chapter 18 Mechanical Data

Overview 18-1

Chapter 19 S3P852B OTP

Overview 19-1
Operating Mode Characteristics 19-3

List of Figures

Figure Number	Title	Page Number
1-1	Block Diagram	1-4
1-2	Pin Assignment (100-Pin QFP Package)	1-5
1-3	Pin Circuit Type 1	1-10
1-4	Pin Circuit Type 2 (RESET)	1-10
1-5	Pin Circuit Type 3 (Port 0)	1-10
1-6	Pin Circuit Type 4 (Port 1.0-Port 1.3)	1-11
1-7	Pin Circuit Type 5 (Port 3)	1-12
1-8	Pin Circuit Type 6 (Port 4, 5, 6)	1-12
2-1	Program Memory Address Space	2-2
2-2	Internal Register File Organization	2-4
2-3	Register Page Pointer (PP)	2-6
2-4	Map of Set 1, Set 2, and Prime Register Spaces	2-7
2-5	8-Byte Working Register Areas (Slices)	2-8
2-6	Contiguous 16-Byte Working Register Block	2-10
2-7	Non-Contiguous 16-Byte Working Register Block	2-10
2-8	16-Bit Register Pairs	2-12
2-9	Register File Addressing	2-13
2-10	Common Working Register Area	2-14
2-11	4-Bit Working Register Addressing	2-17
2-13	4-Bit Working Register Addressing Example	2-17
2-13	8-Bit Working Register Addressing	2-18
2-14	8-Bit Working Register Addressing Example	2-19
2-15	Stack Operations	2-20
3-1	Register Addressing	3-2
3-2	Working Register Addressing	3-2
3-3	Indirect Register Addressing to Register File	3-3
3-4	Indirect Register Addressing to Program Memory	3-4
3-5	Indirect Working Register Addressing to Register File	3-5
3-6	Indirect Working Register Addressing to Program or Data Memory	3-6
3-7	Indexed Addressing to Register File	3-7
3-8	Indexed Addressing to Program or Data Memory with Short Offset	3-8
3-9	Indexed Addressing to Program or Data Memory	3-9
3-10	Direct Addressing for Load Instructions	3-10
3-11	Direct Addressing for Call and Jump Instructions	3-11
3-12	Indirect Addressing	3-12
3-13	Relative Addressing	3-13
3-14	Immediate Addressing	3-14

List of Figures (Continued)

Figure Number	Title	Page Number
4-1	Register Description Format	4-4
5-1	SAM8-Series Interrupt Types	5-2
5-2	S3C852B Interrupt Structure	5-3
5-3	Vector Address Area in Program Memory (ROM)	5-4
5-4	Interrupt Function Diagram	5-7
5-5	System Mode Register (SYM)	5-8
5-6	Interrupt Mask Register (IMR)	5-9
5-7	Interrupt Request Priority Groups	5-10
5-8	Interrupt Priority Register (IPR)	5-11
5-9	Interrupt Request Register (IRQ)	5-12
6-1	System Flags Register (FLAGS)	6-6
7-1	Crystal Oscillator	7-2
7-2	Crystal Oscillator	7-2
7-3	System Clock Circuit Diagram	7-3
7-4	System Clock Control Register (CLKCON)	7-4
7-5	Oscillator Control Register (OSCCON)	7-5
7-6	STOP Control Register (STPCON)	7-7
9-1	S3C852B I/O Port Data Register Format	9-3
9-2	Port 0 Control Register (P0CONH)	9-5
9-3	Port 0 Control Register (P0CONL)	9-5
9-4	Port 0 Interrupt Enable Register (P0INT)	9-6
9-5	Port 0 Interrupt Pending Register (P0PND)	9-6
9-6	Port 0 Interrupt State Register (P0STA)	9-6
9-7	Port 1 High-Byte Control Register (P1CONH)	9-8
9-8	Port 1 Low-Byte Control Register (P1CONL)	9-8
9-9	Port 1 Alternative Function Select Register (P1AFS)	9-9
9-10	Port 2 Control Register (P2CON)	9-10
9-11	Port 3 Control Register (P3CON)	9-12
9-12	Port 3 Alternative Function Select Register (P3AFS)	9-12
9-13	Port 4 Control Register (P4CON)	9-13
9-14	Port 5 Control Register (P5CON)	9-14
9-15	Port 6 Control Register (P6CON)	9-15
9-16	Port 7 High-Byte Control Register (P7CONH)	9-16
9-17	Port 7 Low-Byte Control Register (P7CONL)	9-16
9-18	Port 8 High-Byte Control Register (P8CONH)	9-17
9-19	Port 8 Low-Byte Control Register (P8CONL)	9-17
9-20	Port 9 High-Byte Control Register (P9CONH)	9-18
9-21	Port 9 Low-Byte Control Register (P9CONL)	9-18
9-22	Port 10 High-Byte Control Register (P10CONH)	9-19
9-23	Port 10 Low-Byte Control Register (P10CONL)	9-19

List of Figures (Continued)

Page Number	Title	Page Number
10-1	Basic Timer Control Register (BTCON)	10-2
10-2	Basic Timer Block Diagram	10-4
10-3	Timer 0 Control Register (T0CON)	10-6
10-4	Simplified Timer 0 Function Diagram: Interval Timer Mode	10-7
10-5	Simplified Timer 0 Function Diagram: PWM Mode	10-8
10-6	Simplified Timer 0 Function Diagram: Capture Mode	10-9
10-7	Timer 0 Block Diagram	10-10
11-1	Timer 1 Control Register (TACON)	11-2
11-2	Timer 1 Functional Block Diagram	11-3
11-3	Timer A Control Register (TACON)	11-5
11-4	Timer B Control Register (TBCON)	11-6
11-5	Timer A and B Function Block Diagram	11-8
11-6	Timer B PWM Function Block Diagram	11-9
12-1	Watch Timer Control Register (WTCON)	12-2
12-2	Watch Timer Circuit Diagram	12-3
13-1	Serial I/O Module Control Registers (SIOCON)	13-2
13-2	SIO Prescaler Register (SIOPS)	13-3
13-3	SIO Functional Block Diagram	13-3
13-4	SIO Timing in Transmit/Receive Mode (Tx at falling edge, SIOCON.4=0)	13-4
13-5	SIO Timing in Transmit/Receive Mode (Tx at rising edge, SIOCON.4=1)	13-4
13-6	SIO Timing in Receive-Only Mode (Rising edge start)	13-5
14-1	CID Part Functional Block Diagram	14-2
14-2	Differential Input Buffer of the S3C852B	14-3
14-3	Single Ended Buffer of the S3C852B	14-4
14-4	CASdetect, CASint and INT Related to the CAS Tone	14-5
14-5	Sequence to Receive an FSK Data Byte	14-6
14-6	Interrupt behavior of the FSK receiver with BOMDC = 1	14-7
14-7	Interrupt behavior of the FSK receiver with BOMDC = 0	14-7
14-8	SDT Detector Operation	14-8
14-9	External Component to Generate LRin	14-9
14-10	Behavior of Signals on a Line Reversal	14-10
14-11	Behavior of Signals During Ring	14-10
14-12	Tone Generator Block	14-11
14-13	Block Diagram of NCO	14-12
14-14	Block Diagram of Melody Generator	14-17

List of Figures (Continued)

Page Number	Title	Page Number
15-1	A/D Converter Control Register (ADCON)	15-2
15-2	A/D Converter Data Register (ADDATAH/ADDATAL)	15-2
15-3	A/D Converter Circuit Diagram	15-3
15-4	A/D Converter Timing Diagram	15-4
15-5	Recommended A/D Converter Circuit for Highest Absolute Accuracy	15-5
16-1	S3C852B External Memory Interface Function diagram	16-2
16-2	Internal and External Program Memory Options	16-3
16-3	System Mode Register (SYM)	16-4
16-4	External Memory Timing Control Register (EMT)	16-5
16-5	External Bus Write Cycle Timing Diagram (Address, and Data Separated)	16-10
16-6	External Bus Read Cycle Timing Diagram	16-11
16-7	External Interface Function Diagram (with SRAM and EPROM or EEPROM)	16-13
16-8	External Interface Function Diagram (External ROM Only)	16-14
16-9	External Bus Timing Diagram for 1-Byte Fetch Instructions	16-15
16-10	External Bus Timing Diagram for 2-Byte Fetch Instructions	16-15
16-11	External Bus Timing Diagram for 3-Byte Fetch Instructions	16-16
16-12	External Bus Timing Diagram for 4-Byte Fetch Instructions	16-16
17-1	Stop Mode Release Timing When Initiated by an External Interrupt	17-5
17-2	Stop Mode Release Timing When Initiated by a RESET	17-6
17-3	Input Timing for External Interrupts (P0.0–P0.7)	17-7
17-4	Input Timing for RESET	17-7
17-5	Clock Timing Measurement at X_{IN}	17-9
17-6	Clock Timing Measurement at XT_{IN}	17-9
17-7	Serial Data Transfer Timing	17-11
17-8	Waveform for CAS Timing Characteristics	17-14
18-1	100-Pin QFP Package Mechanical Data	18-2
19-1	S3P852B Pin Assignments (100-Pin QFP Package)	19-2

List of Tables

Table Number	Title	Page Number
1-1	Pin Descriptions	1-6
2-1	S3C852B Register Type Summary	2-4
4-1	Set 1, Bank 0 Registers	4-2
4-2	Set 1, Bank 1 Registers	4-3
5-1	S3C852B/P852B Interrupt Vectors	5-5
5-2	Interrupt Control Register Overview	5-6
6-1	Instruction Group Summary	6-2
6-2	Flag Notation Conventions	6-8
6-3	Instruction Set Symbols	6-8
6-4	Instruction Notation Conventions	6-9
6-5	Opcode Quick Reference	6-10
6-6	Condition Codes	6-12
8-1	S3C851B/P852B Set 1 Register and Values after RESET (Masked ROM Mode)	8-3
8-2	S3C851B/P852B Set 1, Bank 0 Register and Values after RESET (Masked ROM Mode)	8-4
8-3	S3C851B/P852B Set 1, Bank 1 Register Values after RESET (Masked ROM Mode)	8-5
9-1	S3C851B Port Configuration Overview	9-2
9-2	Port Data Register Summary	9-3
14-1	CAS detector parameters	14-5
14-2	FSK Receiver Parameters	14-6
14-3	Stutter dial Tone Parameters	14-8
14-4	DTMF Frequencies Code and Phase Input Data	14-14
14-5	Dual Tone Frequency of CAS and Phase Input Data	14-14
14-6	FSK Parameters	14-15
14-7	The Frequencies and MREF1 Register Values for 3 Octave Musical Scale	14-16
14-8	Interrupt Sources of the CID Block	14-18
14-9	Register Overview	14-19

List of Tables (Continued)

Table Number	Title	Page Number
16-1	Control Register Overview for the External Interface	16-6
16-2	External Interface Control Register Values after a RESET (Normal Mode)	16-7
16-3	External Interface Control Register Values after a RESET (ROM-less Mode)	16-7
16-4	S3C852B External Memory Interface Signal Descriptions	16-12
17-1	Absolute Maximum Ratings	17-2
17-2	D.C. Electrical Characteristics	17-3
17-3	Data Retention Supply Voltage in Stop Mode	17-5
17-4	Input/Output Capacitance	17-7
17-5	A.C. Electrical Characteristics	17-7
17-6	Main Oscillation Characteristics	17-8
17-7	Sub Oscillation Characteristics	17-8
17-8	Main Oscillation Stabilization Time	17-9
17-9	Sub Oscillation Stabilization Time	17-9
17-10	Phase Locked Loop Characteristics	17-10
17-11	Serial I/O Timing Characteristics	17-11
17-12	A/D Converter Electrical Characteristics	17-12
17-13	Electrical Characteristics of CID Block (Receiver & Detectors)	17-13
17-14	CAS Timing Characteristics	17-14
17-15	Electrical Characteristics of CID Block (Tone Generator)	17-14
17-16	SDT Timing Characteristics	17-15
19-1	Descriptions of Pins Used to Read/Write the EPROM	19-3
19-2	Comparison of S3P852B and S3C852B Features	19-3

List of Programming Tips

Description **Page Number**

Chapter 2: Address Spaces

Setting the Register Pointers 2-9
Addressing the Common Working Register Area 2-15
Standard Stack Operations Using PUSH and POP 2-21

Chapter 5: Interrupt Structure

Setting Up the S3C852B Interrupt Control Structure 5-18

Chapter 7: Clock Circuits

Switching the CPU clock 7-6

Chapter 8: RESET and Power-Down

Sample S3C852B Initialization Routine 8-8

Chapter 10: Basic Timer and Timer 0

Configuring the BASIC Timer 10-11
Programming Timer 0 10-12

Chapter 13: Serial I/O Port

Use Internal Clock to Transfer and Receive Serial Data 13-5

Chapter 15: A/D Converter

Configuring A/D Converter 15-6

List of Register Descriptions

Register Identifier	Full Register Name	Page Number
ADCON	A/D Converter Control Register	4-5
BTCON	Basic Timer Control Register	4-6
CLKCON	System Clock Control Register	4-7
CLKMOD	Clock Output Mode Register	4-8
EMT	External Memory Timing Register	4-9
FLAGS	System Flags Register	4-10
IMR	Interrupt Mask Register	4-11
INTPND	Interrupt Pending Register	4-12
IPH	Instruction Pointer (High Byte)	4-13
IPL	Instruction Pointer (Low Byte)	4-13
IPR	Interrupt Priority Register	4-14
IRQ	Interrupt Request Register	4-15
OSCCON	Oscillator Control Register	4-16
P0CONH	Port 0 Control Register (High byte)	4-17
P0CONL	Port 0 Control Register(Low byte)	4-18
P0INT	Port 0 Interrupt Enable Register	4-19
P0PND	Port 0 Interrupt Pending Register	4-20
P0STA	Port 0 Interrupt State Register	4-21
P1AFS	Port 1 Function Select Register	4-22
P1CONH	Port 1 Control Register(High byte)	4-23
P1CONL	Port 1 Control Register(Low byte)	4-24
P2CON	Port 2 Control Register	4-25
P3AFS	Port 3 Function Select Register	4-26
P3CON	Port 3 Control Register	4-27
P4CON	Port 4 Control Register	4-28
P5CON	Port 5 Control Register	4-29
P6CON	Port 4 Control Register	4-30
P7CONH	Port 7 Control Register(High byte)	4-31
P7CONL	Port 7 Control Register(Low byte)	4-32
P8CONH	Port 8 Control Register(High byte)	4-33
P8CONL	Port 8 Control Register(Low byte)	4-34
P9CONH	Port 9 Control Register(High byte)	4-35
P9CONL	Port 9 Control Register(Low byte)	4-36
P10CONH	Port 10 Control Register(High byte)	4-37
P10CONL	Port 10 Control Register(Low byte)	4-38

List of Register Descriptions (Continued)

Register Identifier	Full Register Name	Page Number
PP	Register Page Pointer	4-39
RP0	Register Pointer 0	4-40
RP1	Register Pointer 1	4-40
SIOCON	SIO Control Register	4-41
SIOPS	SIO Prescaler Register	4-42
SPH	Stack Pointer (High Byte)	4-43
SPL	Stack Pointer (Low Byte)	4-43
STPCON	Stop Control Register	4-44
SYM	System Mode Register	4-45
T0CON	Timer A Control Register	4-46
TACON	Timer A Control Register	4-47
TBCON	Timer B Control Register	4-48
WTCON	Watch Timer Control Register	4-49

List of Instruction Descriptions

Instruction Mnemonic	Full Register Name	Page Number
ADC	Add with Carry	6-14
ADD	Add	6-15
AND	Logical AND	6-16
BAND	Bit AND	6-17
BCP	Bit Compare	6-18
BITC	Bit Complement	6-19
BITR	Bit Reset	6-20
BITS	Bit Set	6-21
BOR	Bit OR	6-22
BTJRF	Bit Test, Jump Relative on False	6-23
BTJRT	Bit Test, Jump Relative on True	6-24
BXOR	Bit XOR	6-25
CALL	Call Procedure	6-26
CCF	Complement Carry Flag	6-27
CLR	Clear	6-28
COM	Complement	6-29
CP	Compare	6-30
CPIJE	Compare, Increment, and Jump on Equal	6-31
CPIJNE	Compare, Increment, and Jump on Non-Equal	6-32
DA	Decimal Adjust	6-33
DEC	Decrement	6-35
DECW	Decrement Word	6-36
DI	Disable Interrupts	6-37
DIV	Divide (Unsigned)	6-38
DJNZ	Decrement and Jump if Non-Zero	6-39
EI	Enable Interrupts	6-40
ENTER	Enter	6-41
EXIT	Exit	6-42
IDLE	Idle Operation	6-43
INC	Increment	6-44
INCW	Increment Word	6-45
IRET	Interrupt Return	6-46
JP	Jump	6-47
JR	Jump Relative	6-48
LD	Load	6-49
LDB	Load Bit	6-51

List of Instruction Descriptions (Continued)

Instruction Mnemonic	Full Register Name	Page Number
LDC/LDE	Load Memory	6-52
LDCD/LDED	Load Memory and Decrement	6-54
LDCI/LDEI	Load Memory and Increment	6-55
LDCPD/LDEPD	Load Memory with Pre-Decrement	6-56
LDCPI/LDEPI	Load Memory with Pre-Increment	6-57
LDW	Load Word	6-58
MULT	Multiply (Unsigned)	6-59
NEXT	Next	6-60
NOP	No Operation	6-61
OR	Logical OR	6-62
POP	Pop from Stack	6-63
POPUD	Pop User Stack (Decrementing)	6-64
POPUI	Pop User Stack (Incrementing)	6-65
PUSH	Push to Stack	6-66
PUSHUD	Push User Stack (Decrementing)	6-67
PUSHUI	Push User Stack (Incrementing)	6-68
RCF	Reset Carry Flag	6-69
RET	Return	6-70
RL	Rotate Left	6-71
RLC	Rotate Left through Carry	6-72
RR	Rotate Right	6-73
RRC	Rotate Right through Carry	6-74
SB0	Select Bank 0	6-75
SB1	Select Bank 1	6-76
SBC	Subtract with Carry	6-77
SCF	Set Carry Flag	6-78
SRA	Shift Right Arithmetic	6-79
SRP/SRP0/SRP1	Set Register Pointer	6-80
STOP	Stop Operation	6-81
SUB	Subtract	6-82
SWAP	Swap Nibbles	6-83
TCM	Test Complement under Mask	6-84
TM	Test under Mask	6-85
WFI	Wait for Interrupt	6-86
XOR	Logical Exclusive OR	6-87

1 PRODUCT OVERVIEW

SAM87RC PRODUCT FAMILY

Samsung's new SAM87RC family of 8-bit single-chip CMOS microcontrollers offers a fast and efficient CPU, a wide range of integrated peripherals, and various mask-programmable ROM sizes. Timer/counters with selectable operating modes are included to support real-time operations. Many SAM87RC microcontrollers have an external interface that provides access to external memory and other peripheral devices. The sophisticated interrupt structure recognizes up to eight interrupt levels. Each level can have one or more interrupt sources and vectors. Fast interrupt processing (within a minimum six CPU clocks) can be assigned to specific interrupt levels.

S3C852B MICROCONTROLLER

The S3C852B is a low power CMOS 8-bit micro controller, which has a micro control unit (MCU), Caller ID on Call Waiting (CIDCW) receiver, tone generator, etc. The S3C852B single-chip microcontroller is fabricated using a highly advanced CMOS process. Its design is based on the powerful SAM87RC CPU core. Stop and Idle power-down modes were implemented to reduce power consumption. The S3C852B is used for receiving physical layer signals like Bellcore's CPE Alerting Signal (CAS) and similar evolving systems and also meets the requirements of emerging Caller ID on Call Waiting (CIDCW) services. In addition, two different signal inputs are available to support Tip/Ring and Hybrid connectivity. The device also includes a 1200 baud Bell 202/V.23 compatible FSK data demodulator, a ring or line reversal detector, a Stutter Dial Tone detector and a tone generator. Tone generator is capable of generating FSK signal and dual tone signals such as CAS, DTMF to support various applications such as short messaging service (SMS). The size of the internal register file is logically expanded, increasing the addressable on-chip register space to 1808 bytes. A flexible yet sophisticated external interface is used to access up to 64-Kbytes of program and data memory. The S3C852B is a versatile microcontroller that is ideal for use in a wide range of following applications.

- Bellcore CID and CIDCW systems
- CID and CIDCW feature phones and adjunct boxes
- Voice-Mail and Short Messaging Service (SMS) Equipment

Using the S3C852B modular design approach, the following peripherals were integrated with the SAM87RC CPU core:

- Large number of programmable I/O ports (Total 80 pins)
- One synchronous SIO module
- One 8-bit timer/counter (Including Interval mode, Capture mode, PWM mode)
- One 16-bit timer/counter (Including One 16-bit Timer/Counter mode and Two 8-bit Timer/Counter mode)
- A/D converter with 4 selectable input pins

OTP

The S3C852B microcontroller is also available in OTP(One Time Programmable) version, S3P852B.
The S3P852B microcontroller has an on-chip 64K-byte one-time-programmable EPROM instead of masked ROM. The S3P852B is comparable to S3C852B, both in function and in pin configuration.

FEATURES

CPU

- SAM87RC CPU core

Memory

- 1808-byte of internal register file
- 64-Kbyte internal program memory area

External Interface

- 64-Kbyte external data memory area
- 64-Kbyte external program memory (ROMless)

Instruction Set

- 78 instructions
- IDLE and STOP instructions

Instruction Execution Time

- 558ns at 7.15909MHz fx (minimum)
- 122us at 32.768kHz (sub clock)

Interrupts

- Seven interrupt levels
- Eight external interrupt pins

Timer / Counters

- One 8-bit Basic Timer for watchdog function
- One 8-bit Timer/Counter (Timer 0) with three operating mode; Interval, Capture, PWM
- One 16-bit Timer/Counter
  - – One 16-bit Timer/Counter mode
  - – Two 8-bit Timer/Counters A/B mode
  - – Timer/Counter B including PWM mode (6, 7, 8-bit PWM with 1-channel output : push-pull type)

Watch Timer

- Interval Time:3.91ms, 0.25s, 0.5s, 1s at 32.768 kHz
- Four frequency outputs to BUZ pin

8-bit Serial I/O

- 8-bit transmit/receive mode
- 8-bit receive mode
- Selectable baud rate or external clock source

General I/O

- 80-bit I/O pins

Analog to Digital Converter

- Four analog input pins
- 10-bit conversion resolution
- Internal AV_{REF}, AV_{SS} only

Caller ID Receiver

- FSK demodulator with sensitivity -45dBm (in 600Ω) conforms to Bell 202 and CCITT V.23 standards
- Receive sensitivity of –38dBm (in 600Ω) for CAS
- Stutter Dial Tone detector with sensitivity –38dBm (in 600Ω)
- Ring or Line Reversal detector
- On-hook and off-hook applications according to Bellcore GR-30-CORE and SR-TSV-002476
- Compatible with ETSI standards ETS 300 659-1 and ETS 300 659-2

Tone Generators

- Dual tone generator with gain controller
- FSK tone sequence generator with 1200bps
- 3 Octave melody generator

Power-Down Modes

- Main Idle Mode (only CPU clock stops)
- Sub Idle Mode (only CPU clock stops)
- Stop Mode (main or sub oscillation stops)

Oscillation Sources

- Crystal for main clock (fx)
- Crystal for sub clock (fxt: 32.768kHz)
- PLL for 7.159090Mhz
- PLL for generating fx (3.579545MHz) from fxt

Operating Temperature Range

- 0°C to + 70°C

Operating Voltage Range

- 2.7 V to 5.5 V

Package Type

- 100-pin QFP package

BLOCK DIAGRAM

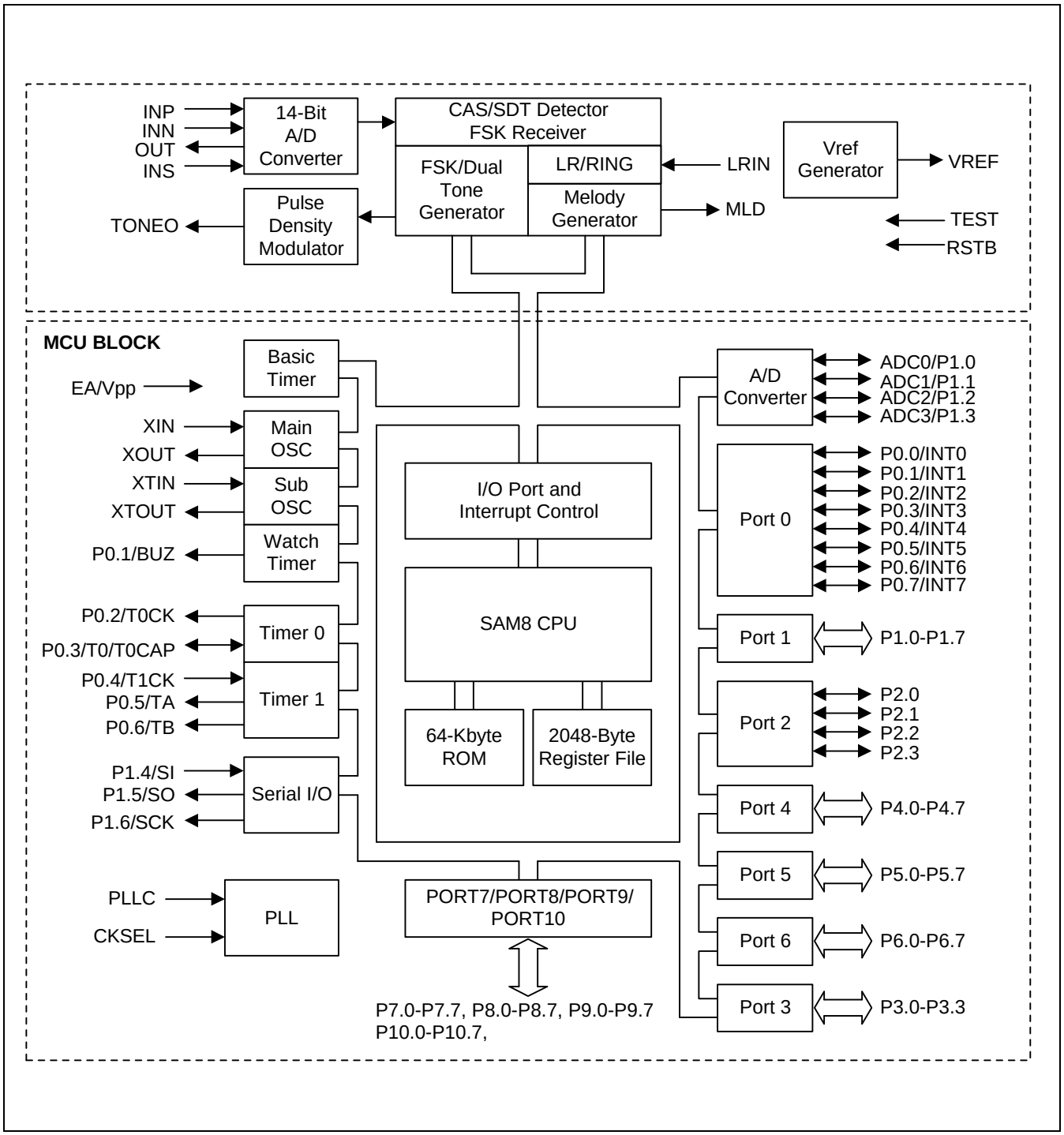

Figure 1-1. Block Diagram

PIN ASSIGNMENTS

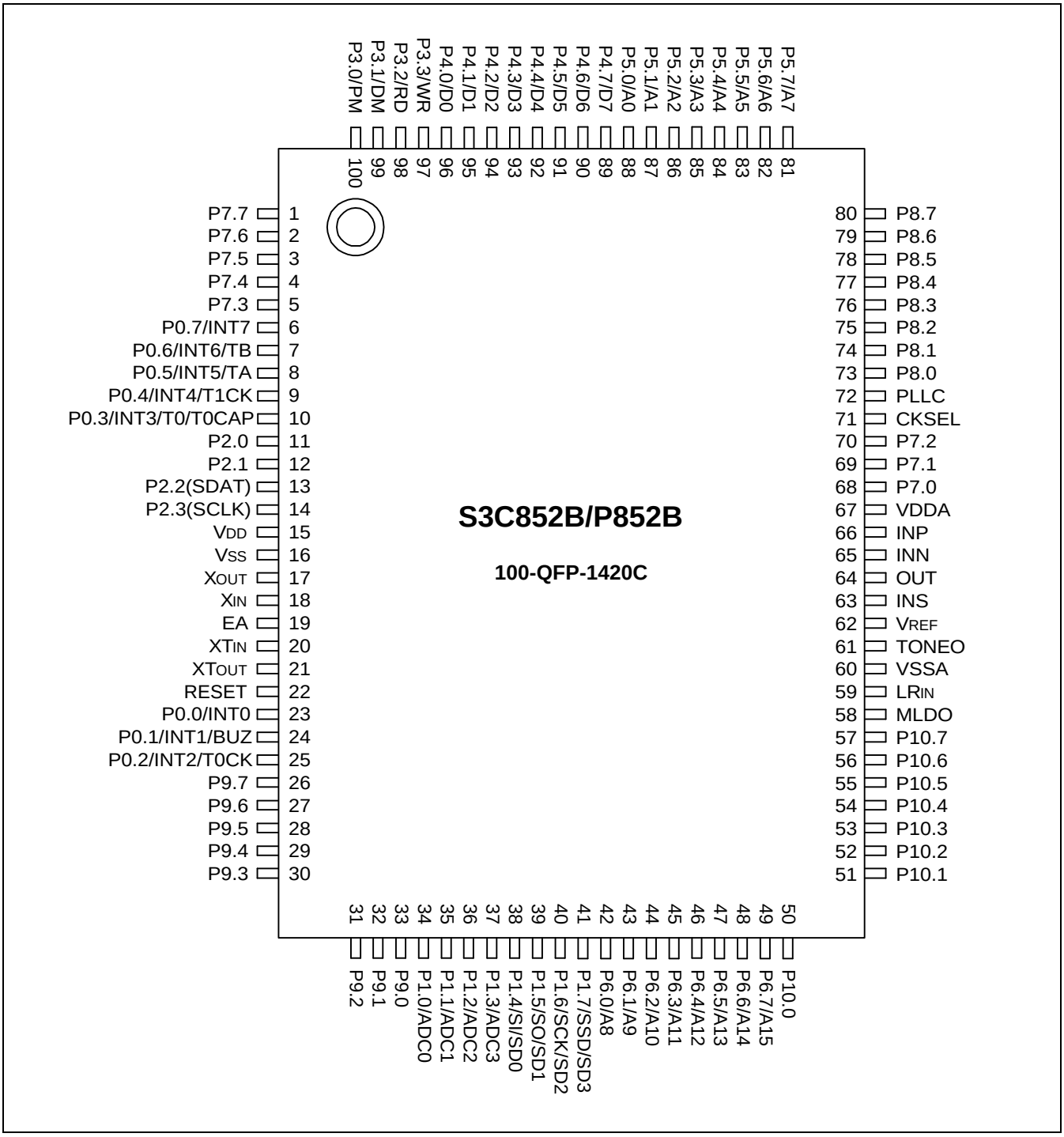

Figure 1-2. Pin Assignment (100-Pin QFP Package)

PIN DESCRIPTIONS

Table 1-1. Pin Descriptions

Pin Names	Pin Type	Pin No.	Pin Description
VDDA	Supply	67	Positive supply voltage for analog operation
INP	Analog Input	66	Input op-amp positive signal input for CAS, FSK and SDT
INN	Analog Input	65	Input op-amp negative signal input for CAS, FSK and SDT
OUT	Analog Output	64	Input op-amp output signal for CAS, FSK and SDT
INS	Analog Input	63	Input op-amp single ended input signal for CAS
V_{REF}	Analog Output	62	Reference voltage for Input signal
TONEO	Analog Output	61	FSK and dual tone signal output
VSSA	Supply	60	Negative supply pin for analog operation (ground)
LR_{IN}	Schmitt Input	59	Input for line reversal or ring detection
TEST	Input	71	Test pin, must be connected to ground
V_{DD}	Supply	15	Positive supply voltage
V_{SS}	Supply	16	Negative supply voltage (ground)
X_{OUT}, X_{IN}	–	17,18	3.579545 MHz crystal input/output
EA/V_{PP}	–	19	Must be connected to ground (in case of OTP writing, It should be connected to V_{PP})
XT_{IN}, XT_{OUT}	–	20,21	Crystal oscillator pins for sub clock (32.768kHz)
RSTB	Input	22	Resets the S3C852B to known state
MLDO	output	58	Melody output
CKSEL	–	71	PLL output/X_{IN} selection
PLLC	Analog Input	72	PLL capacitor
P0.0/INT0 P0.1/INT1/BUZ P0.2/INT2/T0CK P0.3/INT3/T0CAP/T0 P0.4/INT4/T1CK P0.5/INT5/TA P0.6/INT6/TB P0.7/INT7	I/O	23 24 25 10 9 8 7 6	I/O port with bit-programmable pins; Schmitt trigger input or push-pull output and software assignable pull-up; Alternative usage: P0.1-P0.7 : external interrupt input (P0.0 used for CID interrupt handling); P0.1 : buzzer signal output pin; P0.2 : timer0 clock input pin; P0.3 : timer0 capture input or interval/PWM output pin; P0.4 : tomer1 external clock input pin; P0.5 & P0.6 : timer A & timer B clock output pin;

Table 1-1. Pin Descriptions (Continued)

Pin Names	Pin Type	Pin No.	Pin Description
P1.0/ADC0 P1.1/ADC1 P1.2/ADC2 P1.3/ADC3 P1.4/SI /SD0 P1.5/SO/ SD1 P1.6/SCK/SD2 P1.7/SSD/SD3	I/O	34 35 36 37 38 39 40 41	I/O port with bit-programmable pins; Schmitt trigger input or push-pull, open-drain output and software assignable pull-up; Alternative usage: P1.0-P1.3 : four channel analog inputs; P1.4 : serial data input P1.5 : serial data output P1.6 : serial I/O interface clock signal
P2.0 P2.1 P2.2/SDAT P2.3/SCLK	I/O	11 12 13 14	I/O port with bit-programmable pins; Schmitt trigger input or push-pull, open-drain output and software assignable pull-up; Alternative usage: P2.2 : serial data pin for OTP writing P2.3 : serial clock pin for OTP writing
P3.0 P3.1 P3.2 P3.3	I/O	100 99 98 97	I/O port with bit-programmable pins; Schmitt trigger input or push-pull, open-drain output and software assignable pull-up; P3.0-P3.4 are configurable for external interface signals
P4.0 P4.1 P4.2 P4.3 P4.4 P4.5 P4.6 P4.7	I/O	96 95 94 93 92 91 90 89	I/O port with bit-programmable pins; Schmitt trigger input or push-pull, open-drain output and software assignable pull-up; Alternative usage: P4 is configurable for external interface data lines D0-D7
P5.0 P5.1 P5.2 P5.3 P5.4 P5.5 P5.6 P5.7	I/O	88 87 86 85 84 83 82 81	I/O port with bit-programmable pins; Schmitt trigger input or push-pull, open-drain output and software assignable pull-up; Alternative usage: P5 is configurable for external interface address lines A0-A7

Table 1-1. Pin Descriptions (Continued)

Pin Names	Pin Type	Pin No.	Pin Description
P6.0	I/O	42	I/O port with bit-programmable pins;
P6.1		43	Schmitt trigger input or push-pull, open-drain output and software assignable pull-up;
P6.2		44	
P6.3		45	Alternative usage:
P6.4		46	P6 is configurable for external interface address lines A8-A15
P6.5		47	
P6.6		48	
P6.7		49	
P7.7	I/O	5	I/O port with bit-programmable pins;
P7.6		4	Schmitt trigger input or push-pull, open-drain output and software assignable pull-up;
P7.5		3	
P7.4		2	
P7.3		1	
P7.2		70	
P7.1		69	
P7.0		68	
P8.0	I/O	73	I/O port with bit-programmable pins;
P8.1		74	Schmitt trigger input or push-pull, open-drain output and software assignable pull-up;
P8.2		75	
P8.3		76	
P8.4		77	
P8.5		78	
P8.6		79	
P8.7		80	
P9.0	I/O	33	I/O port with bit-programmable pins;
P9.1		32	Schmitt trigger input or push-pull, open-drain output and software assignable pull-up;
P9.2		31	
P9.3		30	
P9.4		29	
P9.5		28	
P9.6		27	
P9.7		26	

Table 1-1. Pin Descriptions (Continued)

Pin Names	Pin Type	Pin No.	Pin Description
P10.0	I/O	50	I/O port with bit-programmable pins;
P10.1		51	Schmitt trigger input or push-pull, open-drain output and software assignable pull-up;
P10.2		52	
P10.3		53	
P10.4		54	
P10.5		55	
P10.6		56	
P10.7		57	

PIN CIRCUITS

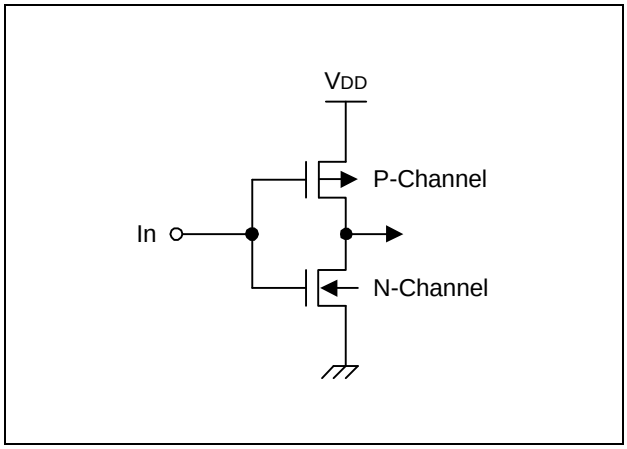

Figure 1-3. Pin Circuit Type 1

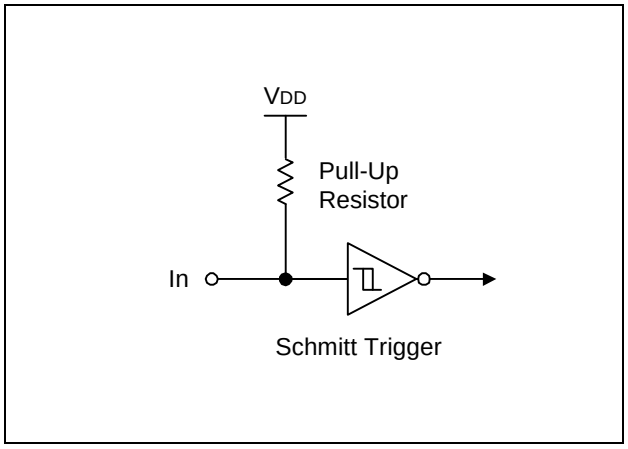

Figure 1-4. Pin Circuit Type 2 (RESET)

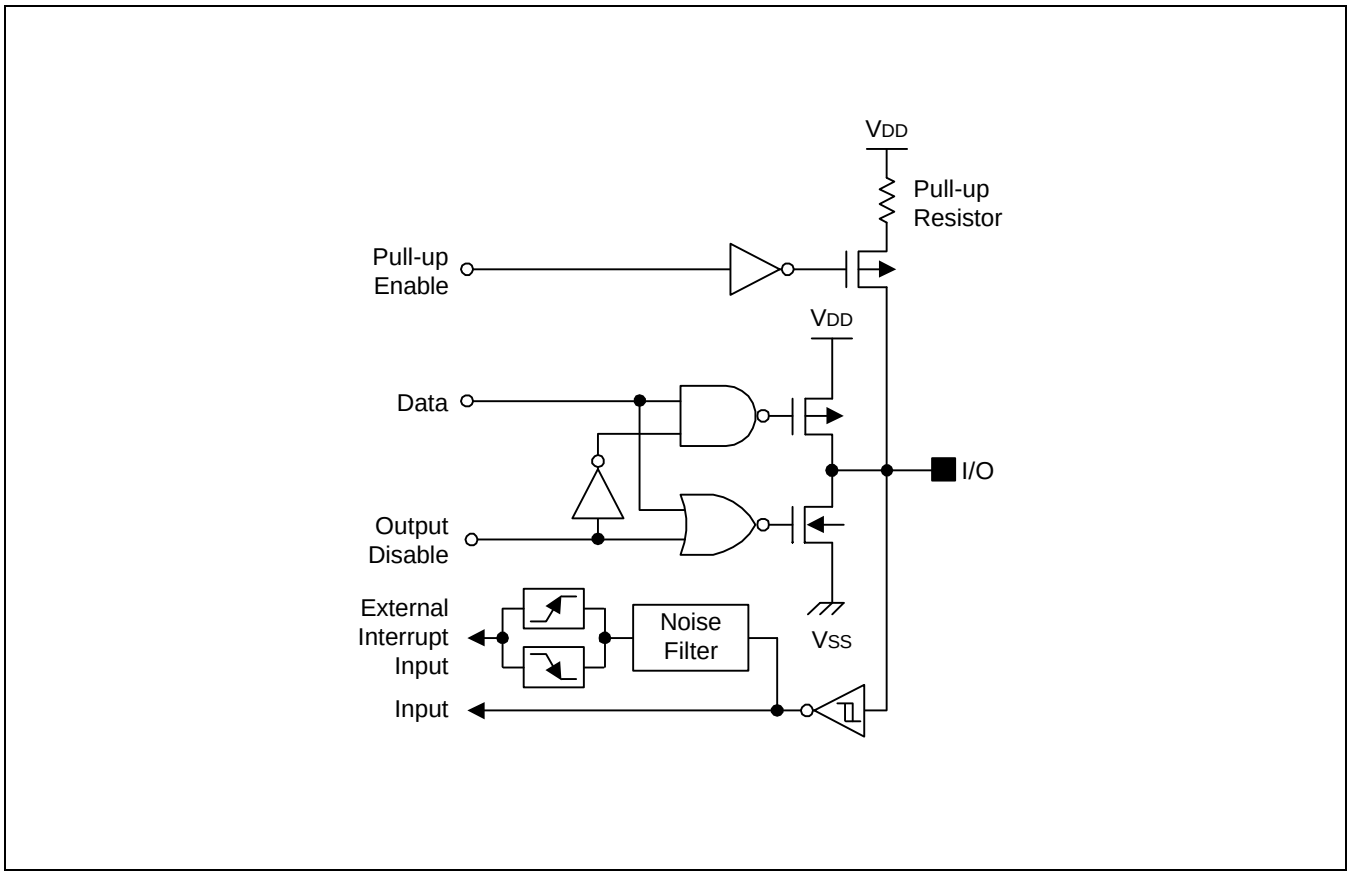

Figure 1-5. Pin Circuit Type 3 (Port 0)

PIN CIRCUITS (Continued)

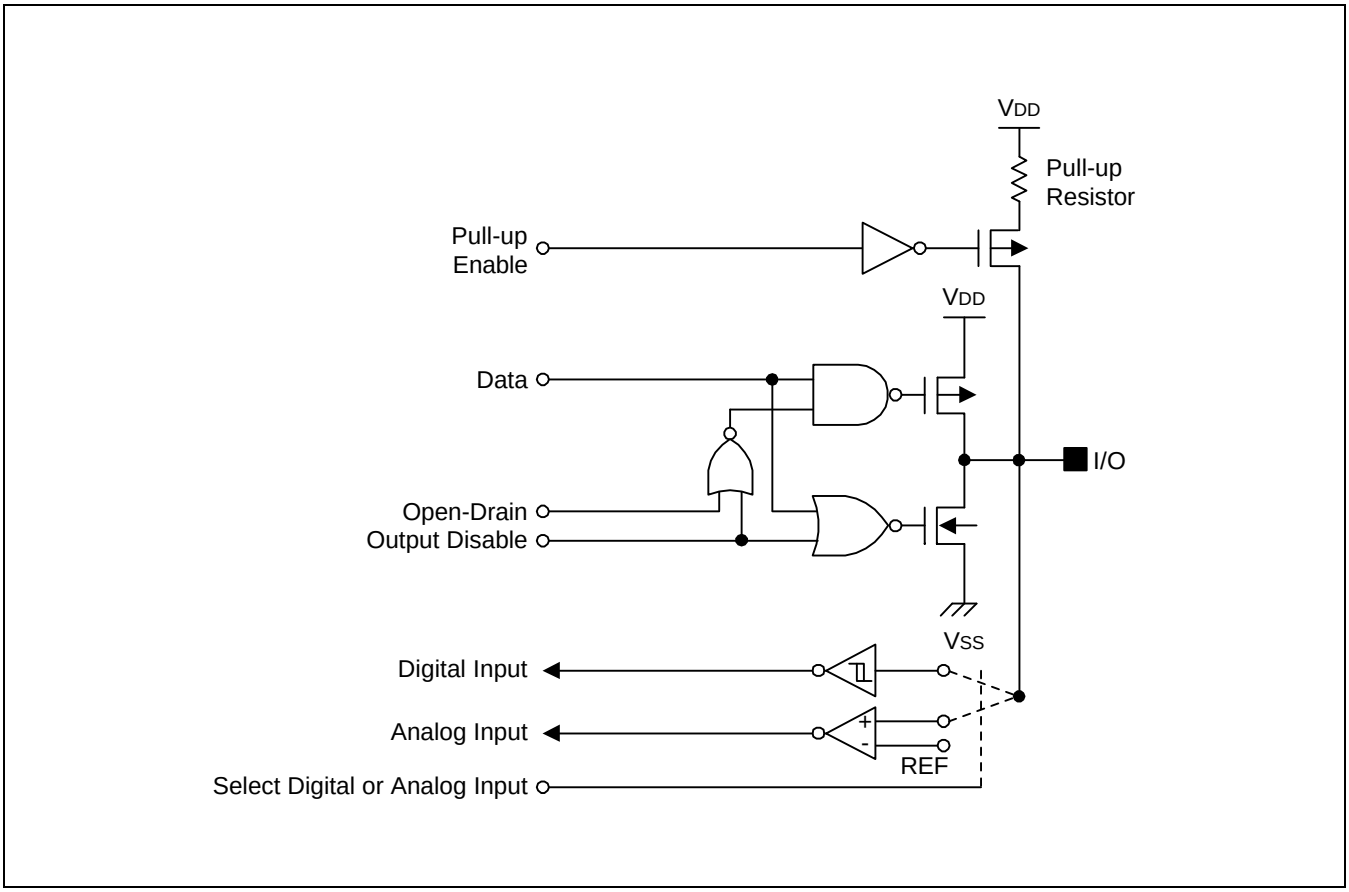

Figure 1-6. Pin Circuit Type 4 (Port 1.0-Port 1.3)

PIN CIRCUITS (Continued)

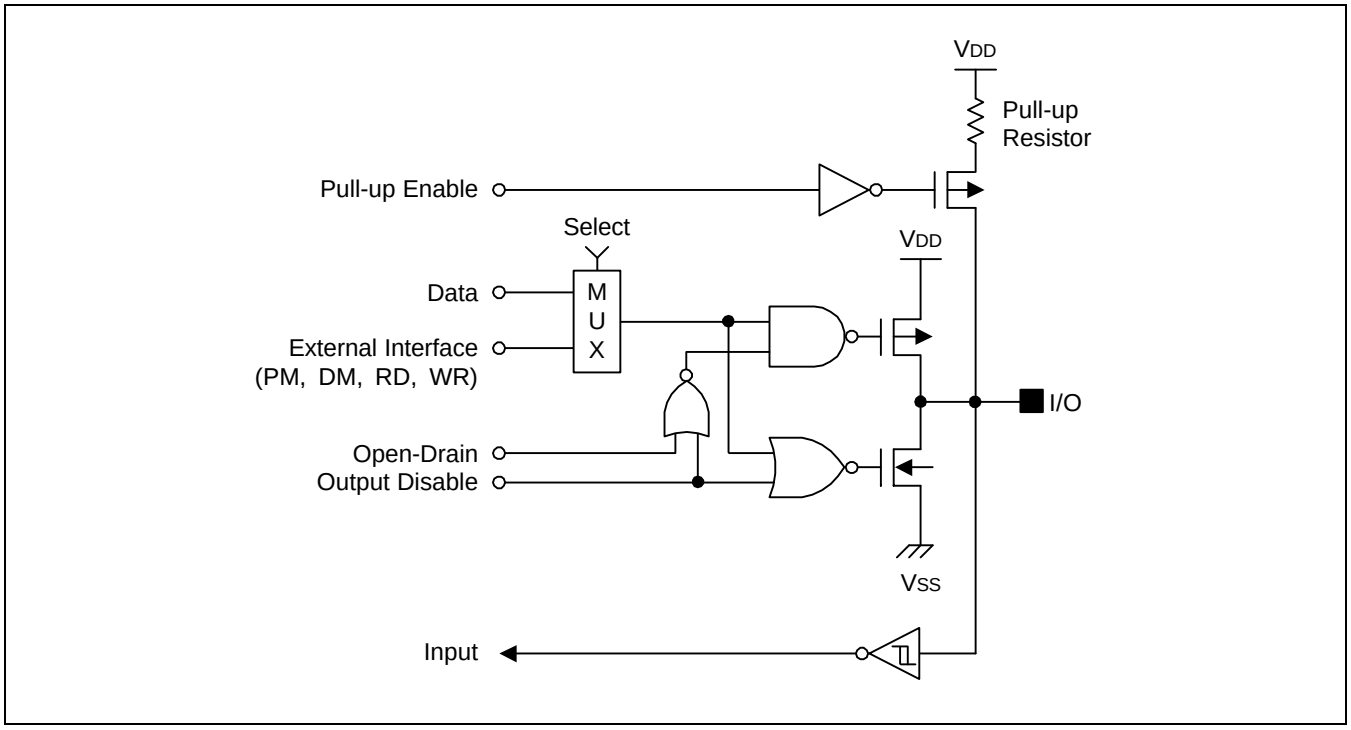

Figure 1-7. Pin Circuit Type 5 (Port 3)

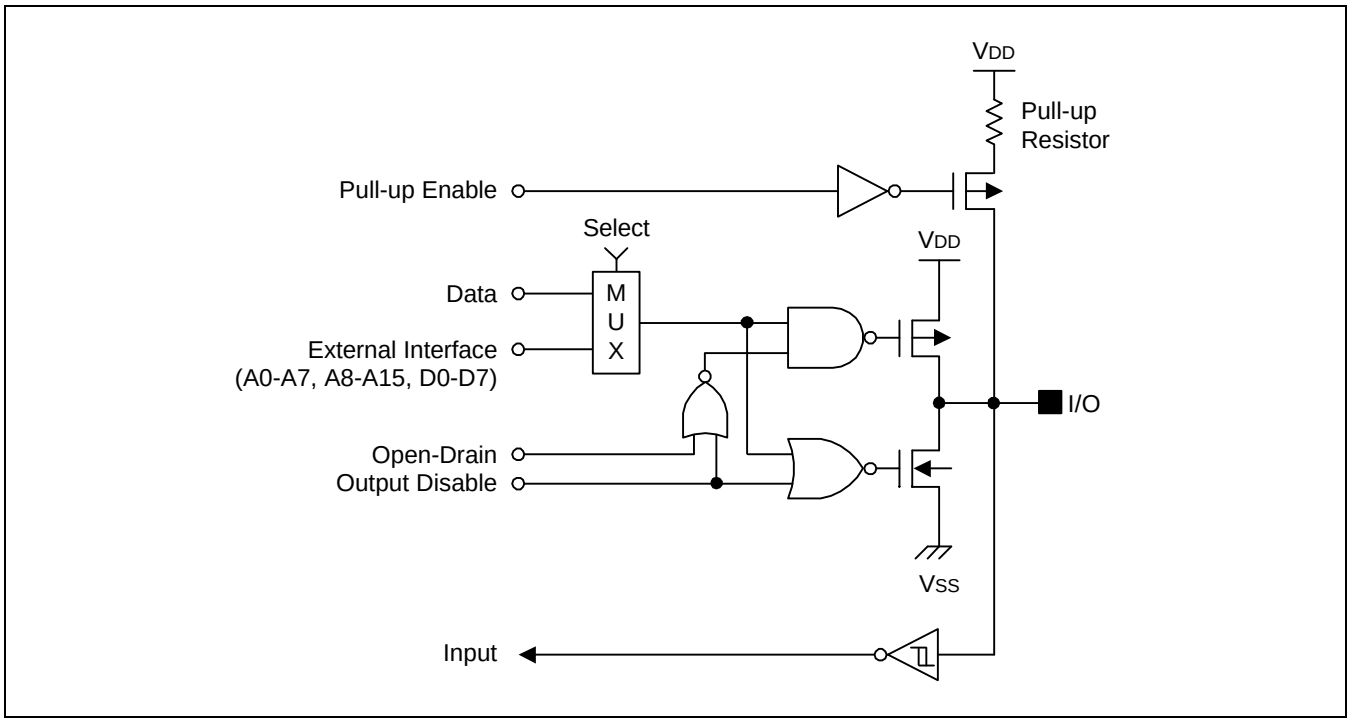

Figure 1-8. Pin Circuit Type 6 (Port 4, 5, 6)

2 ADDRESS SPACES

OVERVIEW

The S3C852B microcontroller has four types of address space:

— Internal program memory (ROM)

— Internal register file

— Internal data memory (RAM)

A 16-bit address bus supports both external program memory and external data memory operations. Special instructions and related internal logic determine when the 16-bit bus carries addresses for external program memory or for external data memory locations. SAM87RC bus architecture therefore supports up to 64 K bytes of program memory (ROM). Using the external interface, you can address up to 64 K bytes of program memory and 64 K bytes of data memory simultaneously. These spaces can be combined or kept separate.

The S3C852B/P852B microcontroller has 1808-byte registers in its internal register file. A separate 8-bit register bus carries addresses and data between the CPU and the internal register file. The most of these registers can serve as either a source or destination address, or as accumulators for data memory operations. Special 85 bytes of the register file are used for working registers, system and peripheral control functions.

PROGRAM MEMORY (ROM)

Normal Operating Mode (Internal ROM)

The S3C852B/P852B has 64 K bytes (locations 0H–FFFFH) of internal mask-programmable program memory. For normal (internal ROM) operation, the EA pin should be connected to V_{SS}.

The first 256 bytes of the ROM (0H–0FFH) are reserved for interrupt vector addresses. Unused locations in this address range can be used as normal program memory. If you do use the vector address area to store program code, be careful to avoid overwriting vector addresses stored in these locations.

The program reset address in the ROM is 0100H.

ROM-Less Operating Mode (External ROM)

For special applications that require external program memory, you can use the ROM-less operating mode to configure an up to 64-Kbyte area externally. Access to the internal 64-Kbyte program memory area is disabled in ROM-less mode.

Mode selection (internal ROM or ROM-less) depends on the voltage that is applied to the EA pin during a power-on reset operation:

— When 0 V is applied to the EA pin, the S3C852B/P852B's internal ROM is configured normally and the 64-Kbyte space (0H–FFFFH) is addressed.

— When 5 V is applied to the EA pin, the S3C852B/P852B operates in ROM-less mode. External memory locations 0000H–FFFFH are accessed over the 16-bit address/8-bit data bus, then the internal 64-Kbyte program memory area is disabled.

When 5 V is applied to the EA pin during a power-on reset, the external peripheral interface is automatically configured as follows:

— The address and data lines for the external interface are configured at Port 4, Port 5 and Port 6 (The control registers P4CON, P5CON and P6CON are set to their initial value for external interface).

— P3AFS register values are set to configure the interface signals (PM, DM, RD, and WR) at Port 3.0–Port 3.3.

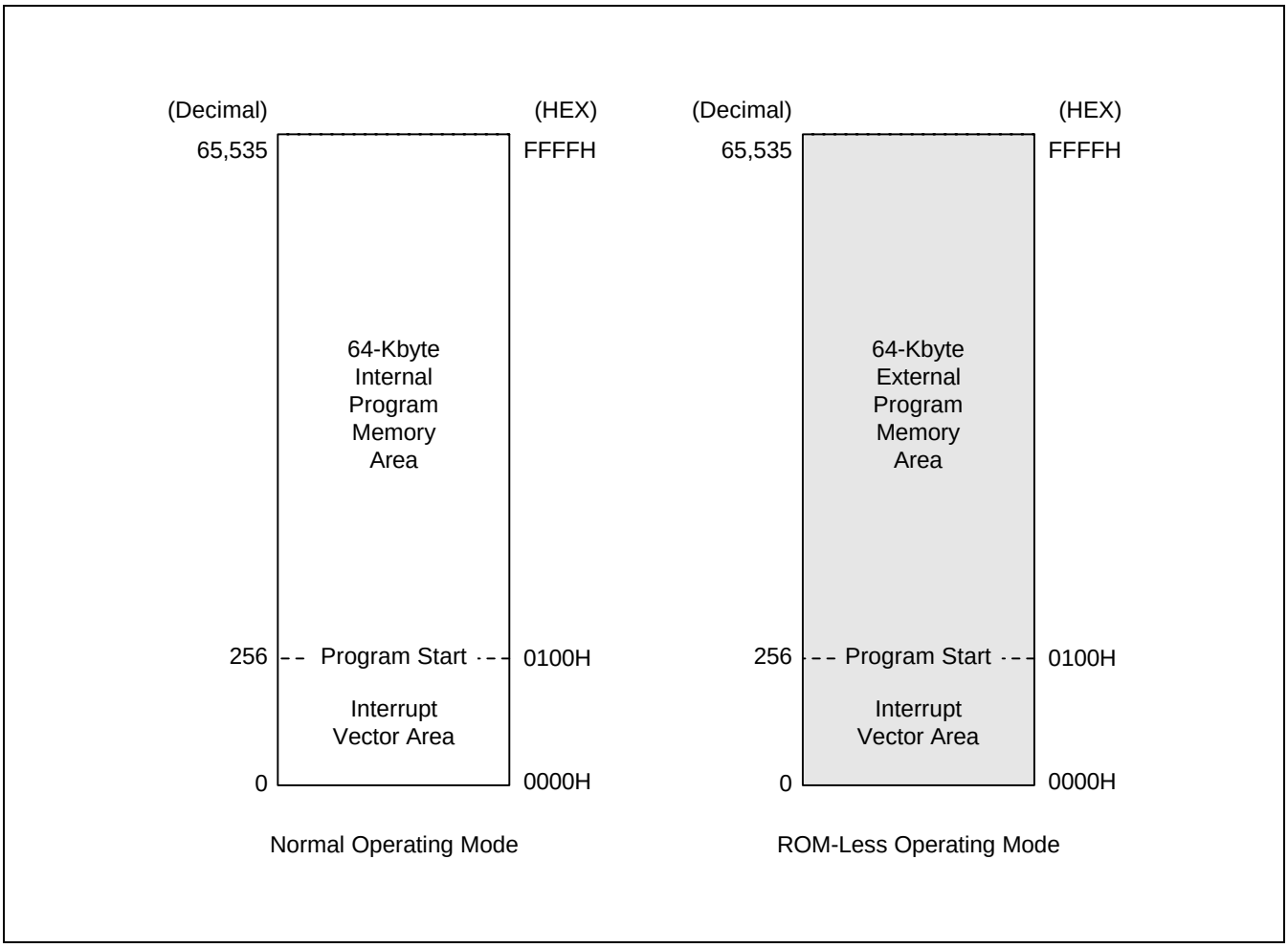

Figure 2-1. Program Memory Address Space

REGISTER ARCHITECTURE

In the S3C852B/P852B implementation, the upper 64 bytes of the 256-byte physical register file is logically divided into two 64-byte areas, called *set 1* and *set 2*. Set 1 is further divided into bank 0(64-byte registers) and bank 1(32-byte registers). In addition, the 256-byte area is logically expanded into seven separately addressable register pages, *page 0–page 6.* This gives a giving a total of 1792 addressable general-purpose registers.

The 8-bit register bus can address up to 256 bytes (0H–FFH) in any one of the seven pages. The register file area is, therefore, 1888-bytes, calculated as 256 bytes × 7 (pages 0–6 in set 2) + 64 bytes (bank 0 in set 1) + 32 bytes (bank 1 in set 1). However, because 11-bytes are not mapped in set 1, the total number of addressable 8-bit registers is 1877. Of these 1877 registers, 69-bytes are for CPU, system control, peripheral control and data registers, 16 bytes are used as a shared working registers, and 1792-byte registers are for general-purpose use.

You can always address set 1 register locations, regardless of which of the seven register pages is currently selected. Set 1 locations can, however, only be addressed using register addressing modes.

The extension of the physical register space into separately addressable areas (sets, banks, and pages) is supported by various addressing mode restrictions, the select bank instructions, SB0 and SB1, and the register page pointer (PP).

Specific register types and the area (in bytes) that they occupy in the register file are summarized in Table 2-1.

Table 2-1. S3C852B Register Type Summary

Register Type	Number of Bytes
CPU and system control registers	19
Peripheral, I/O, and clock control/data registers	50
Reserved working register area	16
General-purpose registers	1,792
Total Addressable Bytes	1,877

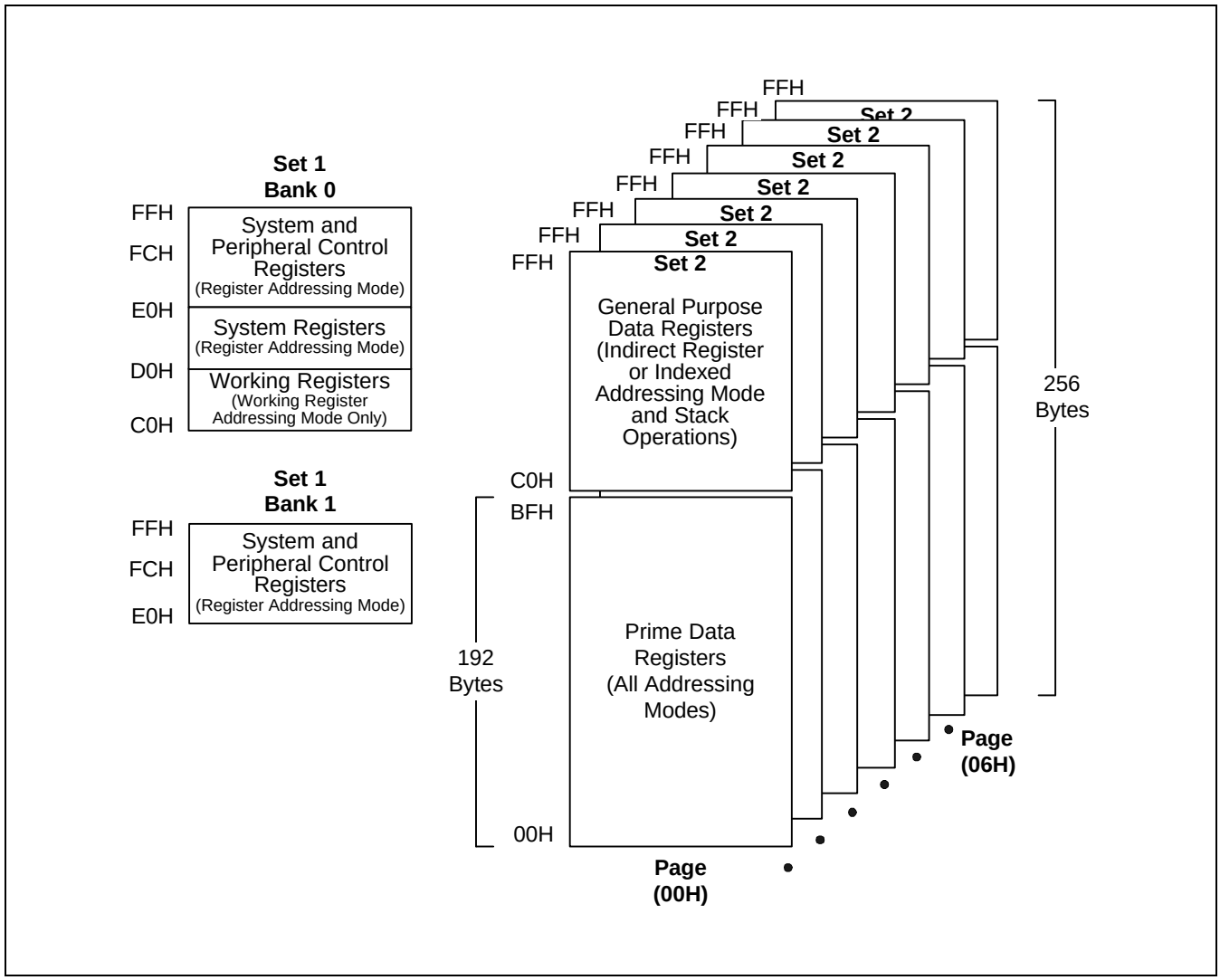

Figure 2-2. Internal Register File Organization

Register Page Pointer (PP)

In the S3C852B/P852B, the physical area of the internal register file is logically expanded by the additional of seven register pages. Page addressing is controlled by the register page pointer (PP, DFH). See Figure 2-3.

Following a reset, the page pointer's source value (lower nibble) and destination value (upper nibble) are always "0000", automatically selecting page 0 as the source and destination page for register addressing.

Whenever you select a different page, the current 256-byte address area (0H–FFH) is logically switched with the address range of the new page (see section 4 "PP" register for more information).

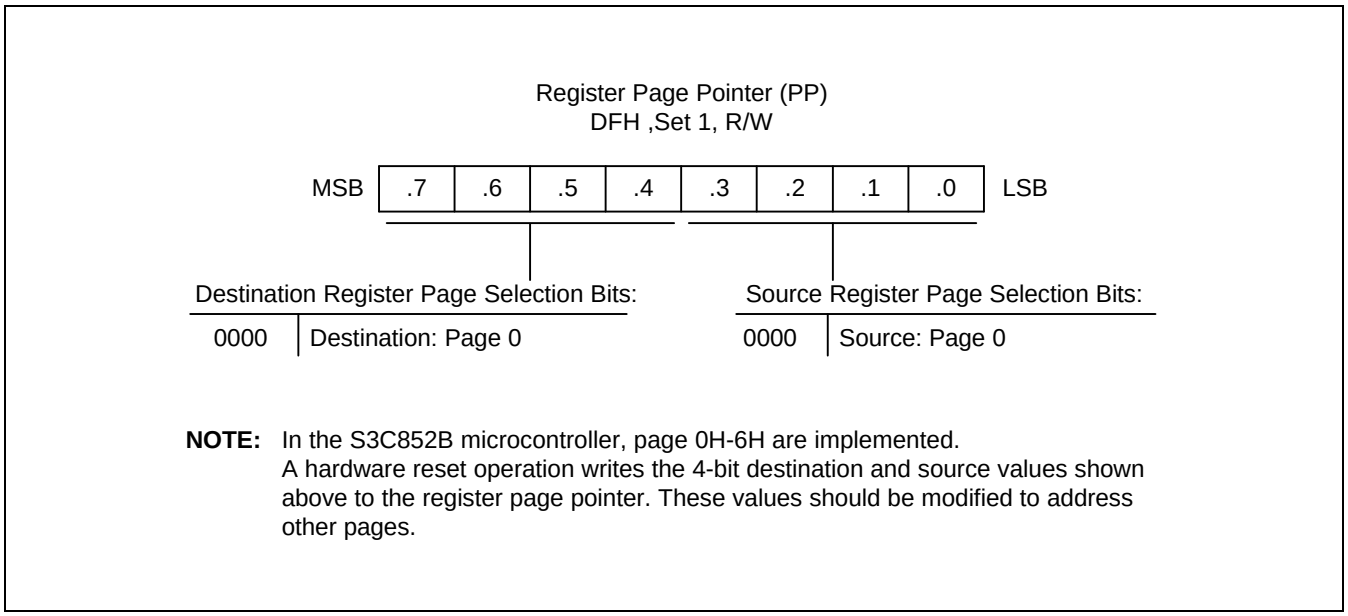

Figure 2-3. Register Page Pointer (PP)

Register Set 1

The term *set 1* refers to the upper 64 bytes of the register file, locations C0H–FFH. This area can be accessed at any time, regardless of which page is currently selected.

The upper 32-byte area of this 64-byte space is divided into two 32-byte register banks, called *bank 0* and *bank 1*. You use the select register bank instructions, SB0 or SB1, to address one bank or the other. A reset operation automatically selects bank 0 addressing.

The lower 32-byte area of set 1 is not banked. This area contains 16 bytes for mapped system registers (D0H–DFH) and a 16-byte common area (C0H–CFH) for working register addressing.

Registers in set 1 are directly accessible at all times using the Register addressing mode. The 16-byte working register area can only be accessed using working register addressing, however.

Working register addressing is a function of Register addressing mode (see Section 3, "Addressing Modes," for more information).

Register Set 2

The same 64-byte physical space that is used for set 1 register locations C0H–FFH is logically duplicated to add another 64 bytes. This expanded area of the register file is called *set 2*. For the S3C852B/P852B, the set 2 address range (C0H–FFH) is accessible on pages 0–6.

The logical division of set 1 and set 2 is maintained by means of addressing mode restrictions: While you can access set 1 using Register addressing mode only, you can only use Register Indirect addressing mode or Indexed addressing mode to access set 2.

Prime Register Space

The lower 192 bytes (00H–BFH) of the S3C852B/P852B's eight 256-byte register pages is called *prime register area.* Prime registers can be accessed using any of the seven addressing modes (see Section 3, "Addressing Modes").

The prime register area on page 0 is immediately addressable following a reset. In order to address prime registers on pages 1, 2, 3, 4, 5 or 6, you must set the register page pointer (PP) to the appropriate source and destination values.

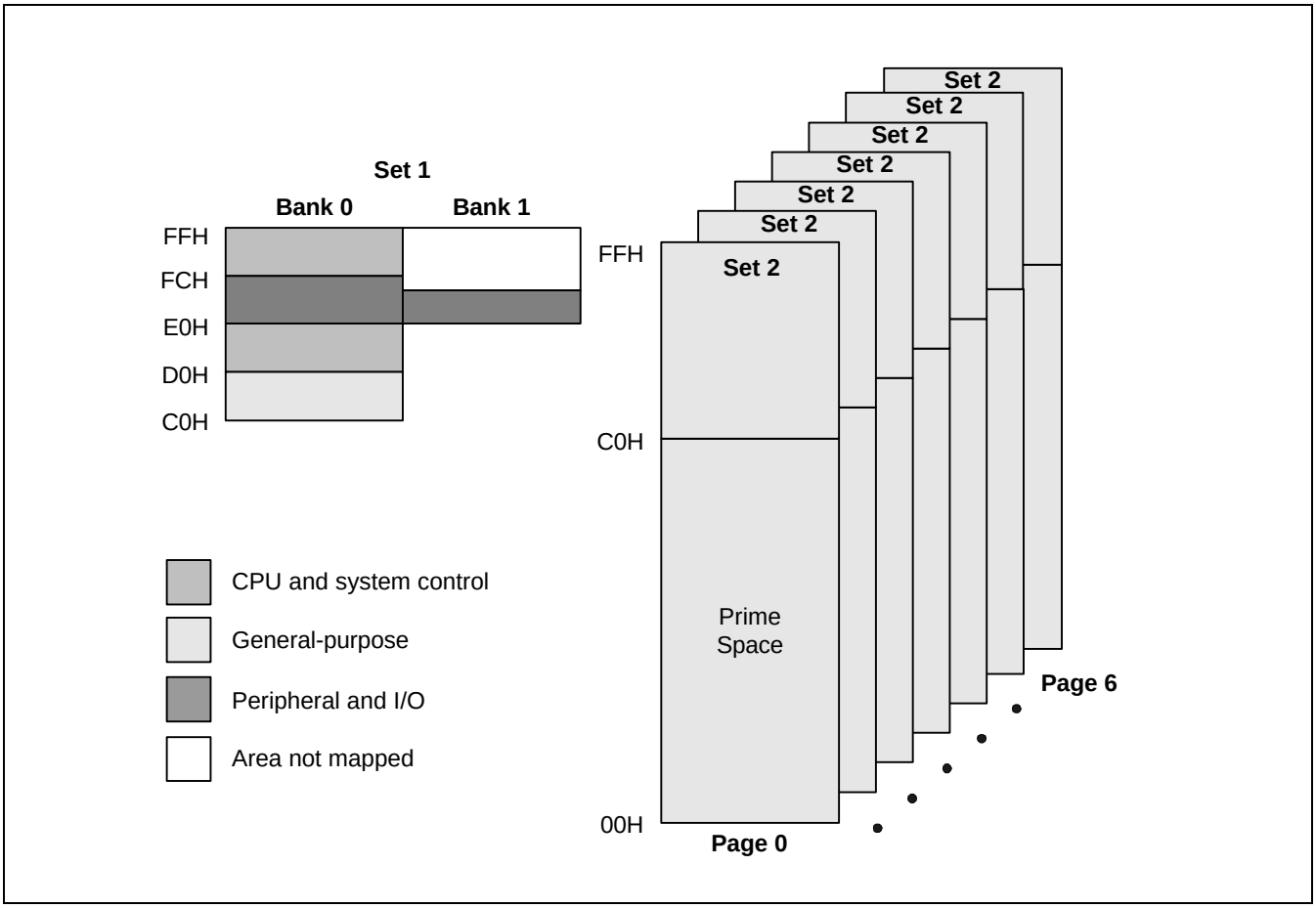

Figure 2-4. Map of Set 1, Set 2, and Prime Register Spaces

WORKING REGISTERS

Instructions can access specific 8-bit registers or 16-bit register pairs using either 4-bit or 8-bit address fields. When 4-bit working register addressing is used, the 256-byte register file can be viewed by the programmer as consisting of 32 8-byte register groups or "slices."

Each slice consists of eight 8-bit registers. Using the two 8-bit register pointers, RP1 and RP0, two working register slices can be selected at any one time to form a 16-byte working register block.

Using the register pointers, you can move this 16-byte register block anywhere in the addressable register file, except for the set 2 area.

The terms slice and block are used in this manual to help you visualize the size and relative locations of selected working register spaces:

— One working register *slice* is 8 bytes (eight 8-bit working registers; R0–R7 or R8–R15)

— One working register *block* is 16 bytes (sixteen 8-bit working registers; R0–R15)

All of the registers in an 8-byte working register slice have the same binary value for their five most significant address bits. This makes it possible for each register pointer to point to one of the 24 slices in the register file.

The base addresses for the two selected 8-byte register slices are contained in register pointers RP0 and RP1. After a reset, RP0 and RP1 always point to the 16-byte common area in set 1 (C0H–CFH).

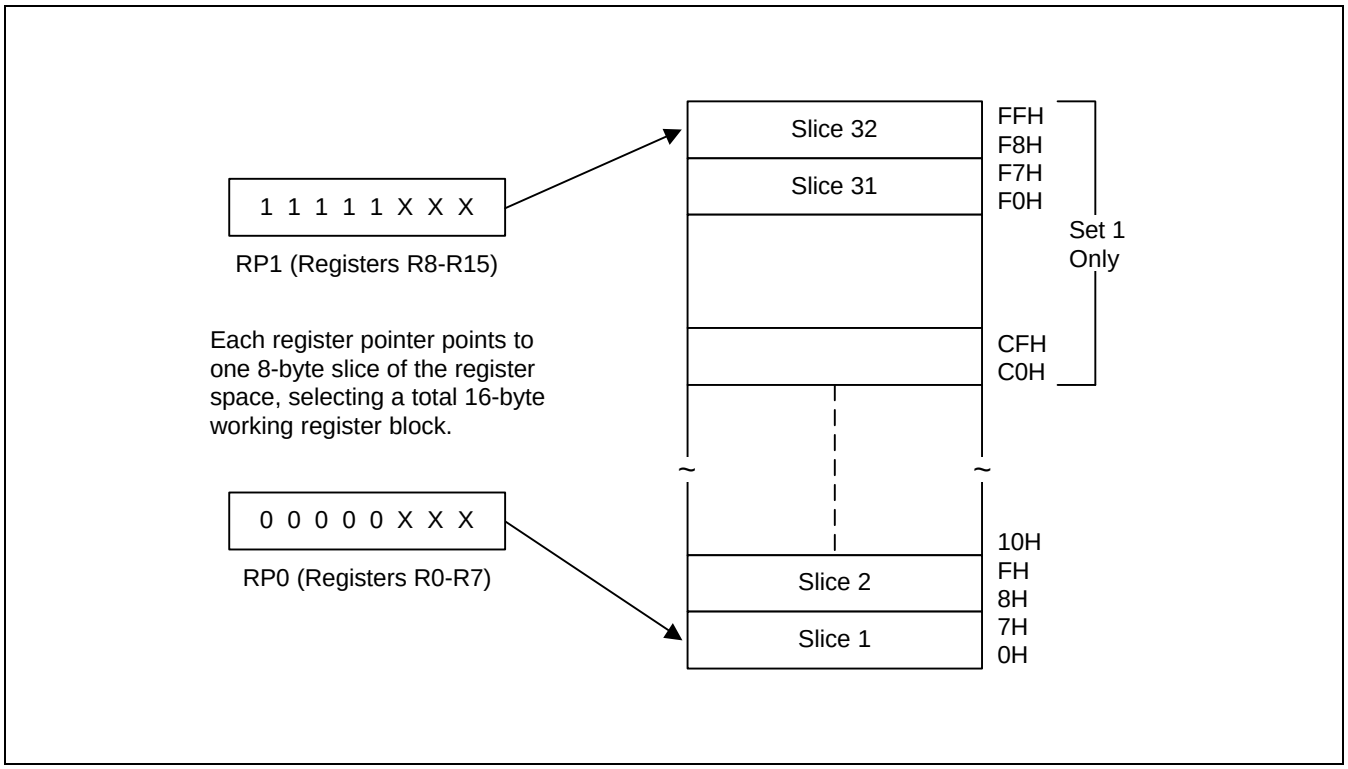

Figure 2-5. 8-Byte Working Register Areas (Slices)

USING THE REGISTER POINTERS

Register pointers RP0 and RP1 are mapped to addresses D6H and D7H in set 1. They are used to select two movable 8-byte working register slices in the register file.

After a reset, they point to the working register common area: RP0 points to addresses C0H–C7H, and RP1 points to addresses C8H–CFH.

To change a register pointer value, you load a new value to RP0 and/or RP1 using an SRP or LD instruction (see Figures 2-6 and 2-7).

With working register addressing, you can only access those locations that are pointed to by the register pointers. Please note that you cannot use the register pointers to select working register area in set 2, C0H–FFH, because these locations are accessible only using the Indirect Register or Indexed addressing modes.

The selected 16-byte working register block usually consists of two contiguous 8-byte slices. As a general programming guideline, we recommend that RP0 point to the "lower" slice and RP1 point to the "upper" slice (see Figure 2-6).

In some cases, you may need to define working register areas in different (non-contiguous) areas of the register file. In Figure 2-7, RP0 points to the "upper" slice and RP1 to the "lower" slice.

Because a register pointer can point to the either of the two 8-byte slices in the working register block, definition of the working register area is very flexible.

☞ PROGRAMMING TIP — Setting the Register Pointers

```
SRP     #70H        ; RP0 ← 70H, RP1 ← 78H
SRP1    #48H        ; RP0 ← no change, RP1 ← 48H
SRP0    #0A0H       ; RP0 ← A0H, RP1 ← no change
CLR     RP0         ; RP0 ← 00H, RP1 ← no change
LD      RP1,#0F8H   ; RP0 ← no change, RP1 ← 0F8H
```

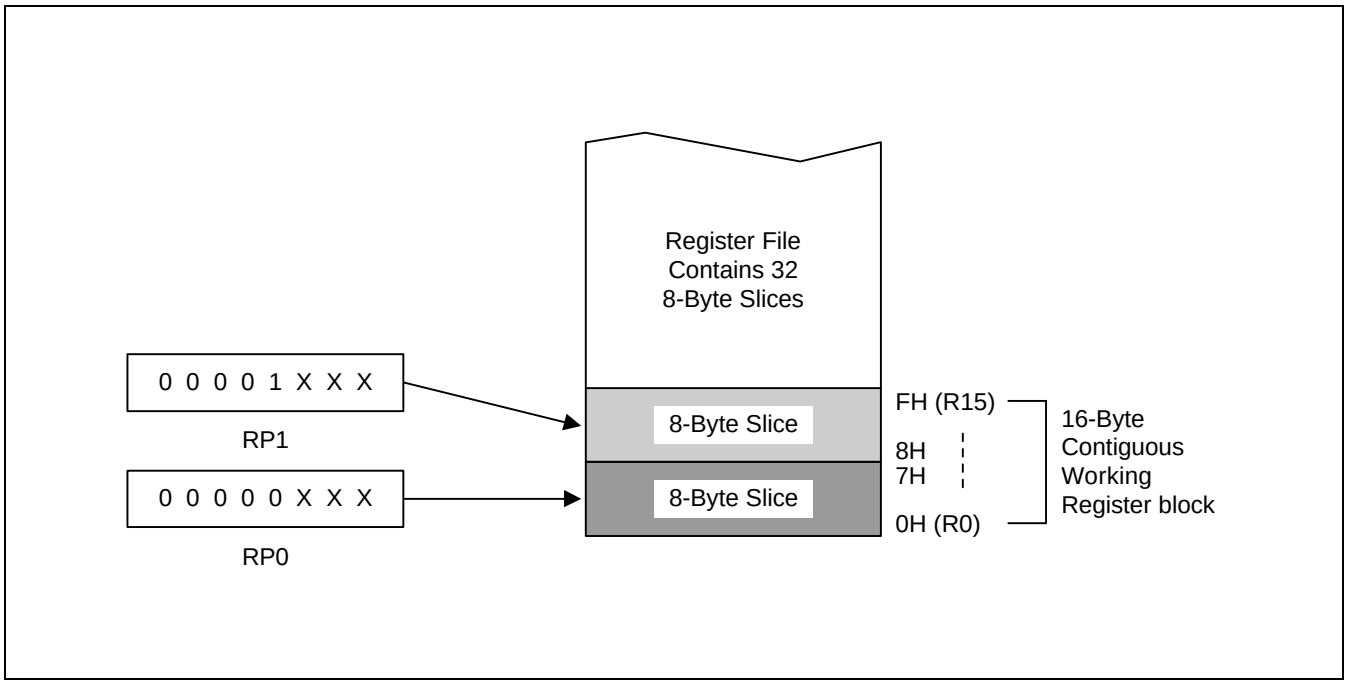

Figure 2-6. Contiguous 16-Byte Working Register Block

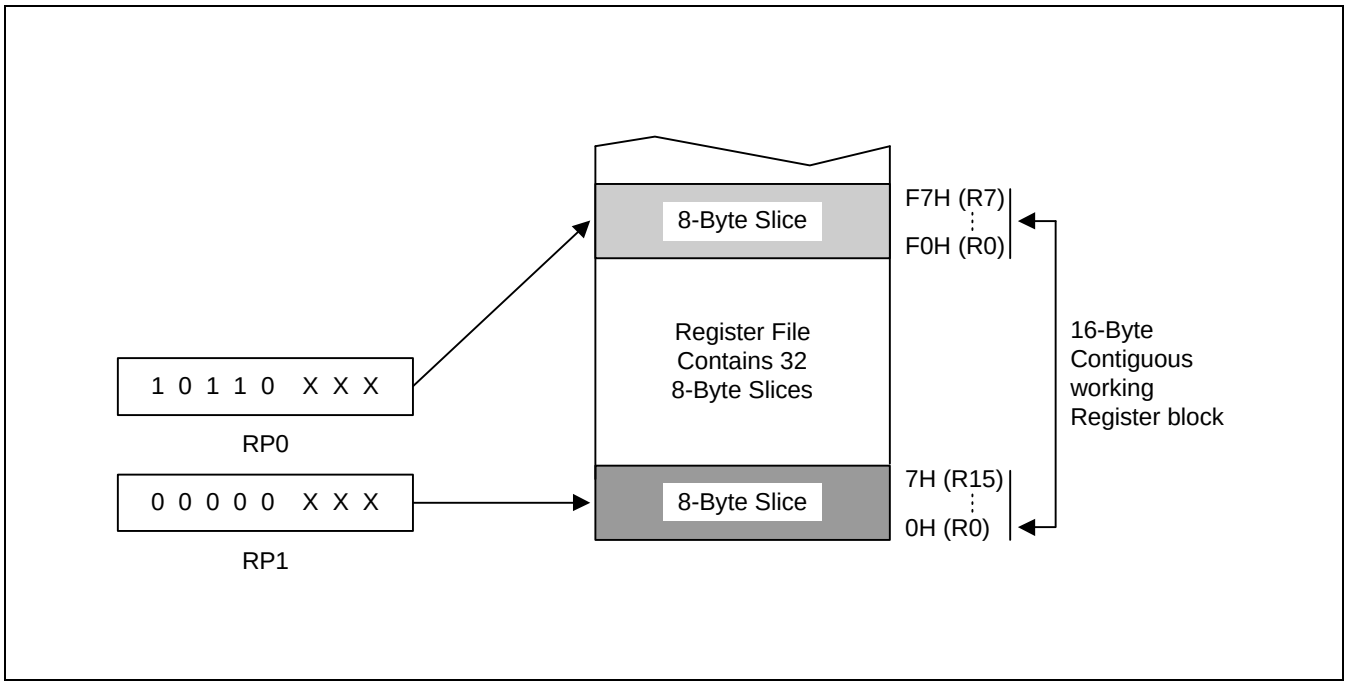

Figure 2-7. Non-Contiguous 16-Byte Working Register Block

Calculate the sum of registers 80H–85H using the register pointer. The register addresses 80H through 85H contains the values 10H, 11H, 12H, 13H, 14H, and 15 H, respectively:

```
SRP0    #80H        ;  RP0 ← 80H
ADD     R0,R1       ;  R0 ← R0 + R1
ADC     R0,R2       ;  R0 ← R0 + R2 + C
ADC     R0,R3       ;  R0 ← R0 + R3 + C
ADC     R0,R4       ;  R0 ← R0 + R4 + C
ADC     R0,R5       ;  R0 ← R0 + R5 + C
```

The sum of these six registers, 6FH, is located in the register R0 (80H). The instruction string used in this example takes 12 bytes of instruction code and its execution time is 24 cycles. If the register pointer is not used to calculate the sum of these registers, the following instruction sequence would have to be used:

```
ADD     80H,81H     ;  80H ← (80H) + (81H)
ADC     80H,82H     ;  80H ← (80H) + (82H) + C
ADC     80H,83H     ;  80H ← (80H) + (83H) + C
ADC     80H,84H     ;  80H ← (80H) + (84H) + C
ADC     80H,85H     ;  80H ← (80H) + (85H) + C
```

Now, the sum of the six registers is also located in register 80H. However, this instruction string takes 15 bytes of instruction code instead of 12 bytes, and its execution time is 30 cycles instead of 24 cycles.

REGISTER ADDRESSING

The SAM8 register architecture provides an efficient method of working register addressing that takes full advantage of shorter instruction formats to reduce execution time.

The Register (R) addressing mode, in which the operand value is the content of a specific register or register pair, can be used to access all locations in the register file except for set 2.

For working register addressing, the register pointers RP0 and RP1 are used to select a specific register within a selected 16-byte working register area. To increase the speed of context switches in an application program, you can use the register pointers to dynamically select different 8-byte "slices" of the register file as the program's active working register space.

Registers are addressed either as a single 8-bit register or as a paired 16-bit register. In 16-bit register pairs, the address of the first 8-bit register is always an even number and the address of the next register is an odd number.

The most significant byte of the 16-bit data is always stored in the even-numbered register; the least significant byte is always stored in the next (+ 1) odd-numbered register.

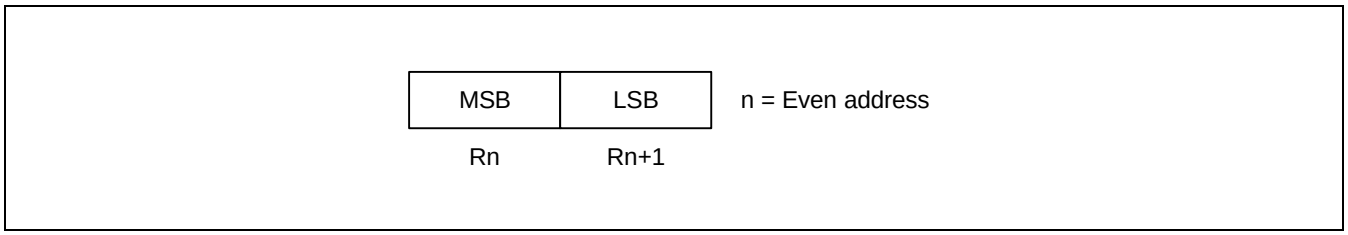

Figure 2-8. 16-Bit Register Pairs

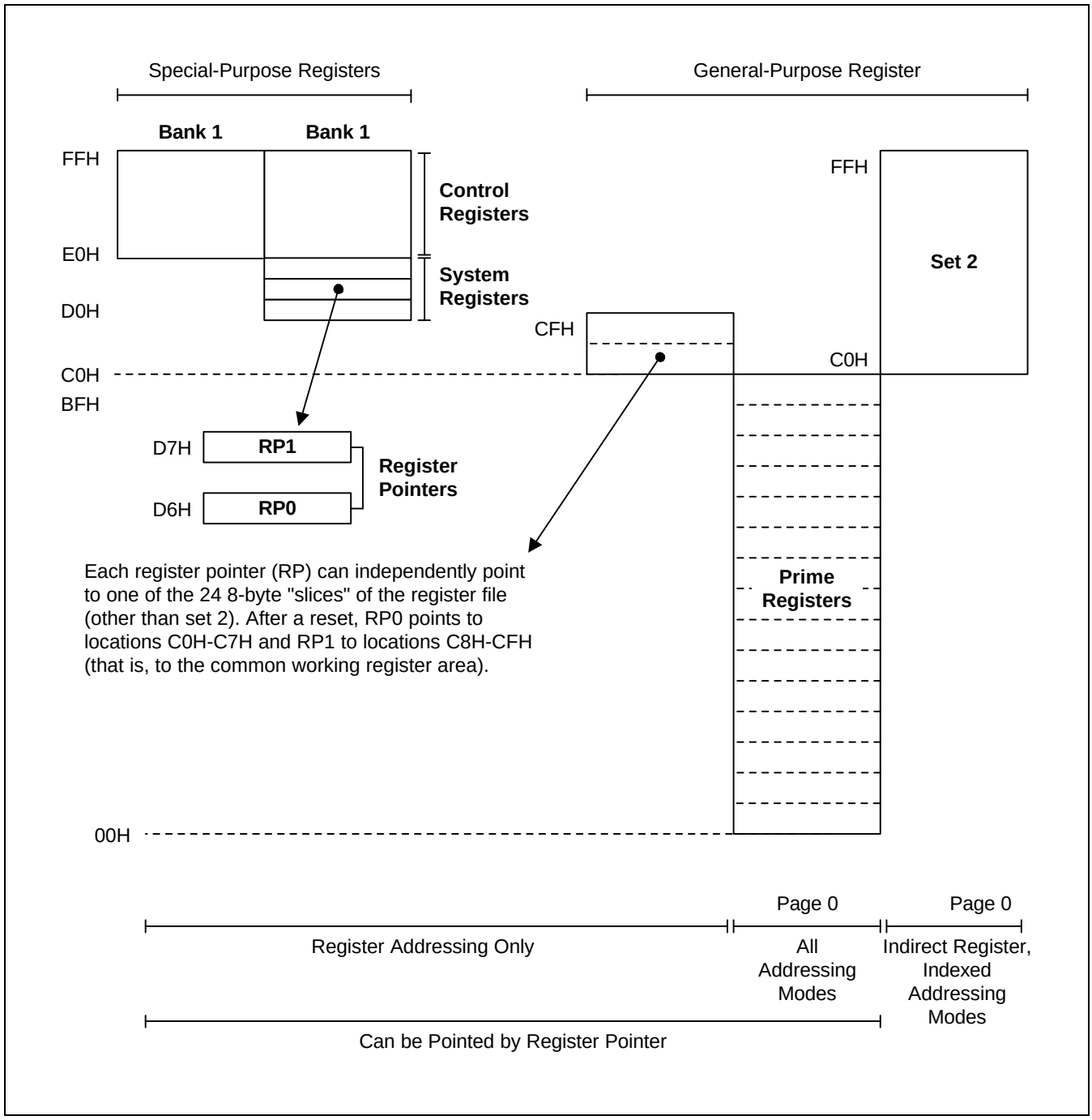

Figure 2-9. Register File Addressing

COMMON WORKING REGISTER AREA (C0H–CFH)

After a reset, register pointers RP0 and RP1 automatically select two 8-byte register slices in set 1, locations C0H–CFH, as the active 16-byte working register block:

RP0 → C0H–C7H
RP1 → C8H–CFH

This 16-byte address range is called the *common area*. You can use common area registers as working registers for operations that address locations on different pages in the register file.

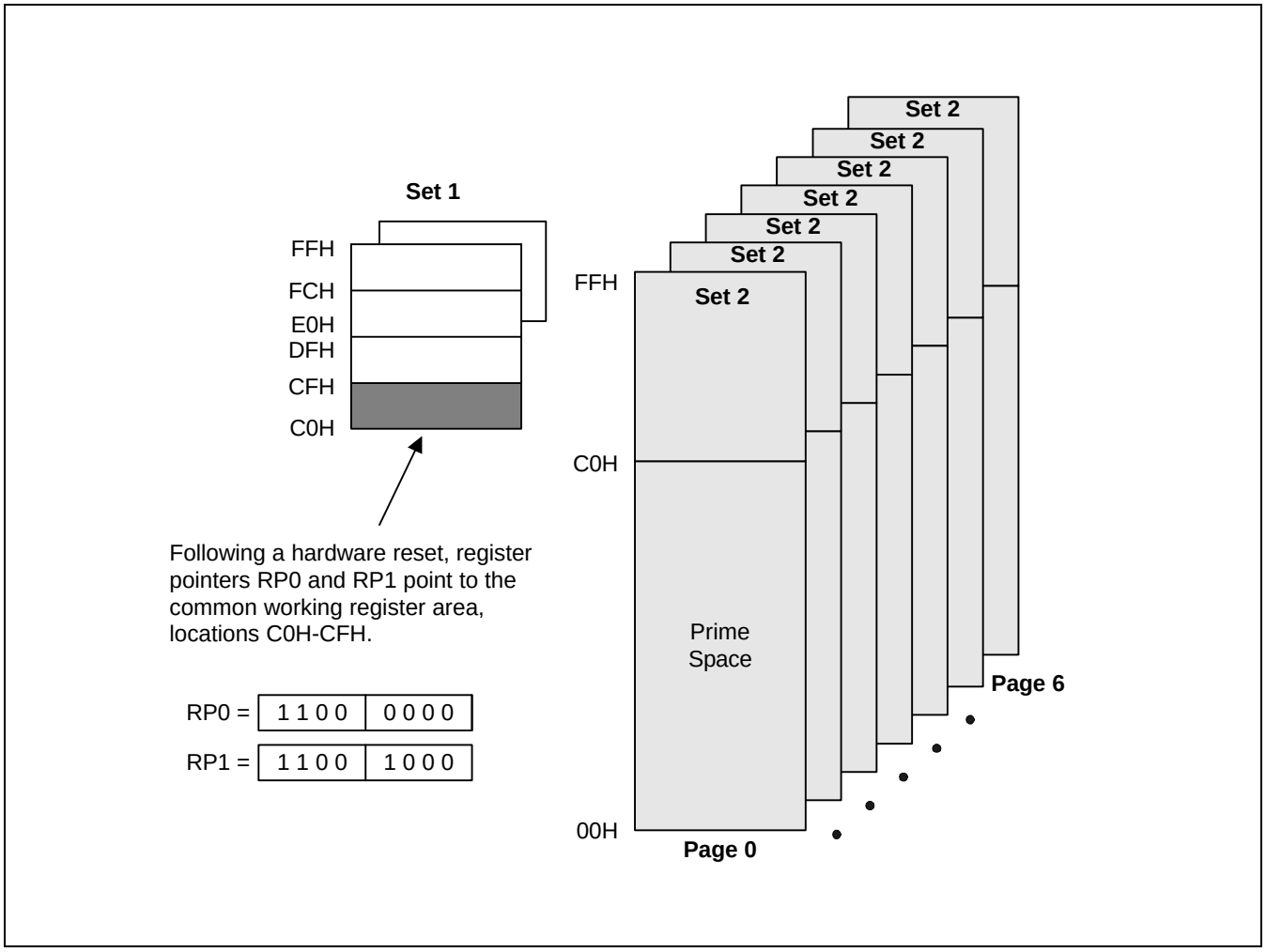

Figure 2-10. Common Working Register Area

☞ PROGRAMMING TIP — Addressing the Common Working Register Area

As the following examples show, you should access working registers in the common area, locations C0H–CFH, using working register addressing mode only.

Example 1:

```
LD      0C2H,40H        ;  Invalid addressing mode!
```

Use working register addressing instead:

```
SRP     #0C0H
LD      R2,40H          ;  R2 (C2H) ← the value in location 40H
```

Example 2:

```
ADD     0C3H,#45H       ;  Invalid addressing mode!
```

Use working register addressing instead:

```
SRP     #0C0H
ADD     R3,#45H         ;  R3 (C3H) ← R3 + 45H
```

4-BIT WORKING REGISTER ADDRESSING

Each register pointer defines a movable 8-byte slice of working register space. The address information stored in a register pointer serves as an addressing "window" that enables instructions to access working registers very efficiently using short 4-bit addresses.

When an instruction addresses a location in the selected working register area, the address bits are concatenated in the following way to form a complete 8-bit address:

— The high-order bit of the 4-bit address selects one of the register pointers ("0" selects RP0; "1" selects RP1);

— The five high-order bits in the register pointer select an 8-byte slice of the register space;

— The three low-order bits of the 4-bit address select one of the eight registers in the slice.

As shown in Figure 2-11, the net effect of this operation is that the five high-order bits from the register pointer are concatenated with the three low-order bits from the instruction address to form the complete address.

As long as the address stored in the register pointer remains unchanged, the three bits from the address will always point to an address in the same 8-byte register slice.

Figure 2-12 shows a typical example of 4-bit working register addressing: The high-order bit of the instruction 'INC R6' is "0", which selects RP0.

The five high-order bits stored in RP0 (01110B) are concatenated with the three low-order bits of the instruction's 4-bit address (110B) to produce the register address 76H (01110110B).

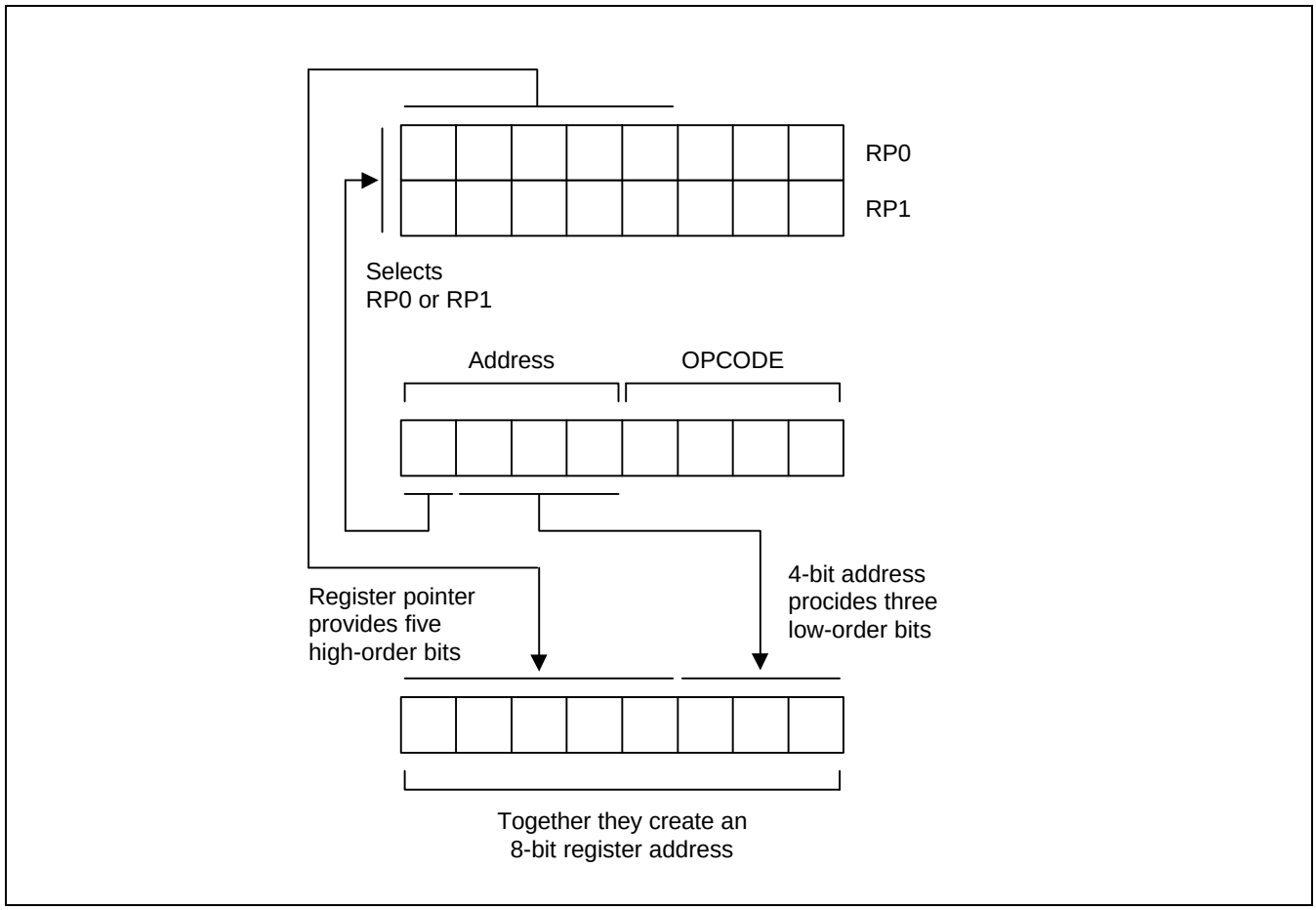

Figure 2-11. 4-Bit Working Register Addressing

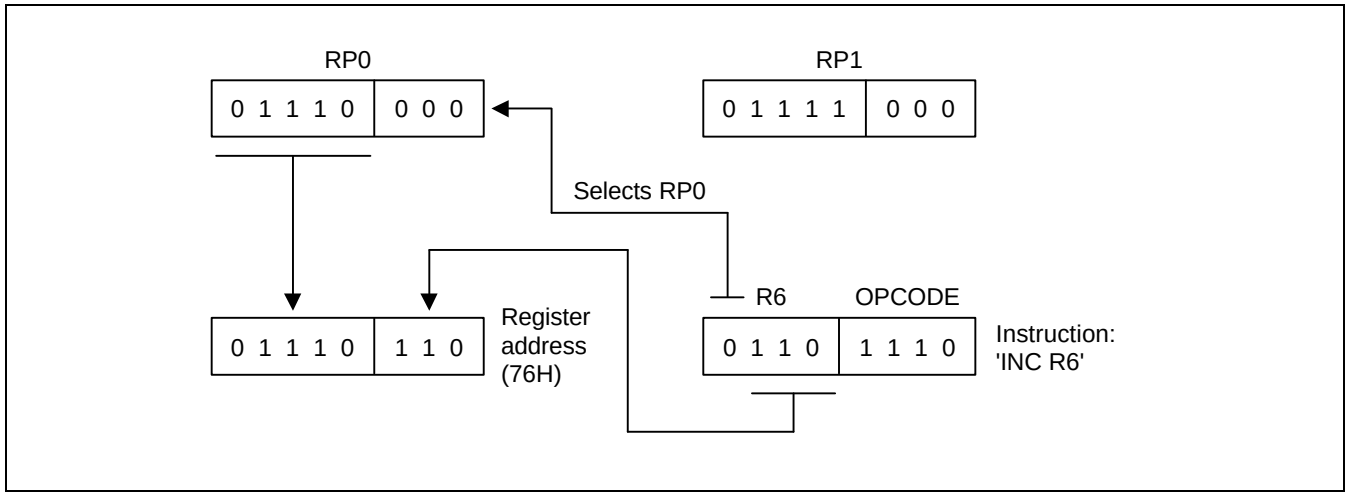

Figure 2-12. 4-Bit Working Register Addressing Example

8-BIT WORKING REGISTER ADDRESSING

You can also use 8-bit working register addressing to access registers in a selected working register area. In order to initiate 8-bit working register addressing, the upper four bits of the instruction address must contain the value 1100B. This 4-bit value (1100B) indicates that the remaining four bits have the same effect as 4-bit working register addressing.

As shown in Figure 2-13, the lower nibble of the 8-bit address is concatenated in much the same way as for 4-bit addressing: Bit 3 selects either RP0 or RP1, which then supplies the five high-order bits of the final address, and the three low-order bits of the complete address are provided by the original instruction.

Figure 2-14 shows an example of 8-bit working register addressing: The four high-order bits of the instruction address (1100B) specify 8-bit working register addressing. The fourth bit ("1") selects RP1 and the five high-order bits in RP1 (10100B) become the five high-order bits of the register address.

The three low-order bits of the register address (011) are provided by the three low-order bits of the 8-bit instruction address. Together, the five address bits from RP1 and the three address bits from the instruction comprise the complete register address, 0ABH (10100011B).

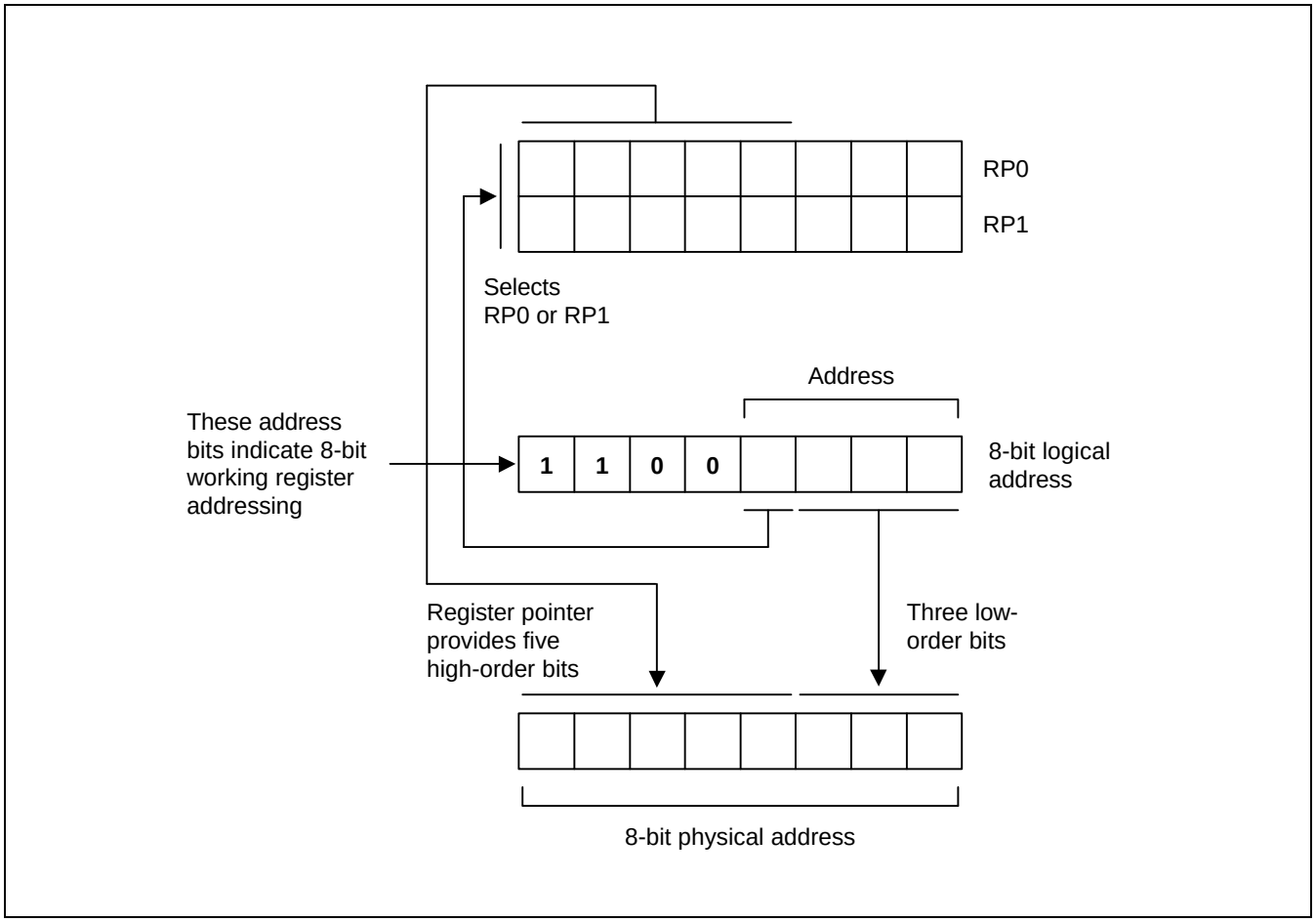

Figure 2-13. 8-Bit Working Register Addressing

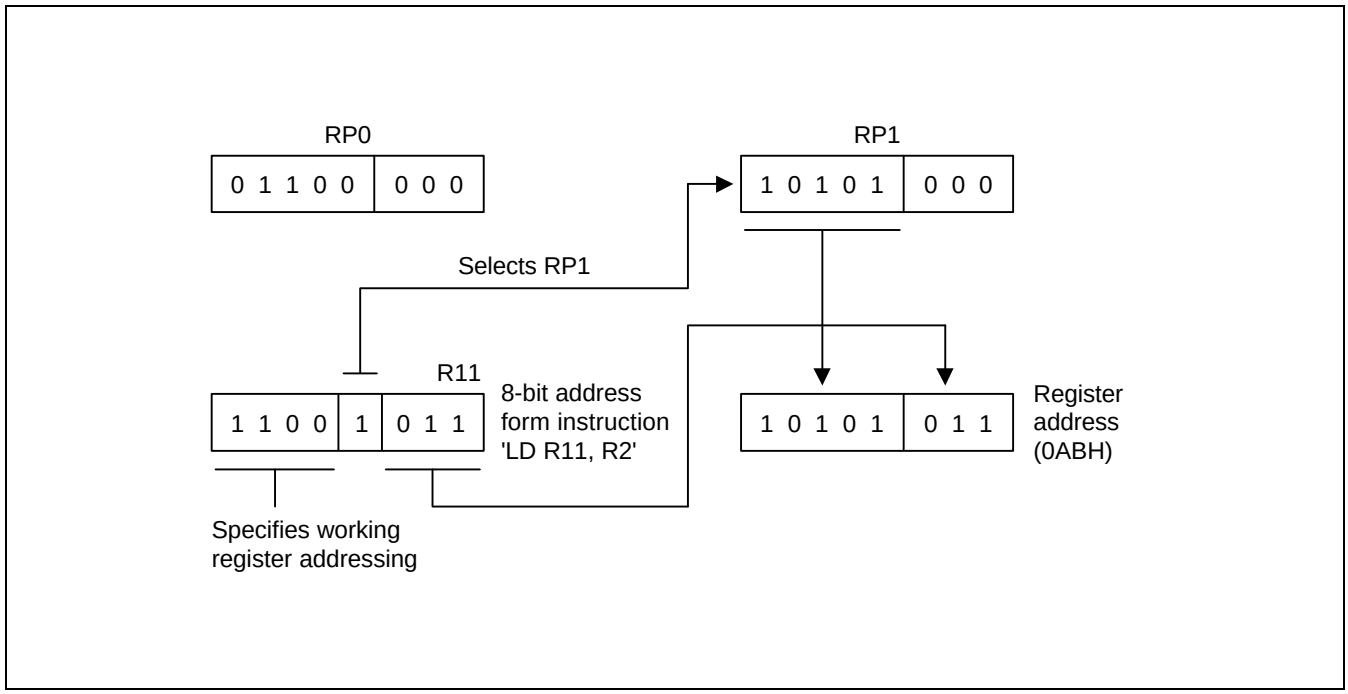

Figure 2-14. 8-Bit Working Register Addressing Example

SYSTEM AND USER STACKS

KS88-series microcontrollers can be programmed to use system stack for subroutine calls, returns, interrupts, and to store data. The PUSH and POP instructions are used to control system stack operations.

The SAM8 architecture supports stack operations in the internal register file as well as in external data memory. To select an internal or external stack area, you set bit 1 of the external memory timing register, EMT.1 to the appropriate value.

Stack Operations

Return addresses for procedure calls and interrupts and data are stored on the stack. The contents of the PC are saved to stack by a CALL instruction and restored by the RET instruction.

When an interrupt occurs, the contents of the PC and the FLAGS register are pushed to the stack. The IRET instruction then pops these values back to their original locations.

The stack address is always decremented *before* a push operation and incremented *after* a pop operation. The stack pointer (SP) always points to the stack frame stored on the top of the stack, as shown in Figure 2-15.

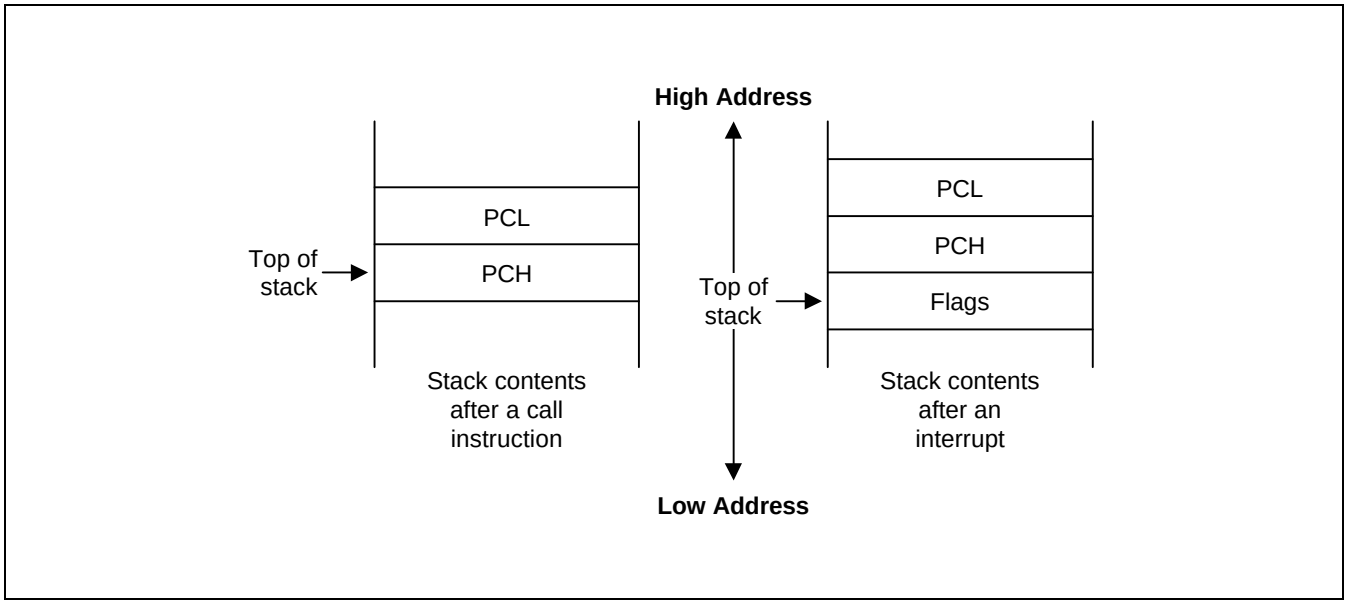

Figure 2-15. Stack Operations

User-Defined Stacks

You can freely define stacks in the internal register file as data storage locations. The instructions PUSHUI, PUSHUD, POPUI, and POPUD support user-defined stack operations.

These instructions cannot address external memory locations. Only PUSH and POP instructions can be used for an externally defined stack.

Stack Pointers (SPL, SPH)

Register locations D8H and D9H contain the 16-bit stack pointer (SP) that is used for system stack operations. The most significant byte of the SP address, SP15–SP8, is stored in the SPH register (D8H); the least significant byte, SP7–SP0, is stored in the SPL register (D9H). After a reset, the SP value is undetermined.

If only internal memory space is implemented, the SPL must be initialized to an 8-bit value in the range 00H–FFH; the SPH register is not needed (and can be used as a general-purpose register, if needed). If external memory is implemented, both SPL and SPH must be initialized with a full 16-bit address.

When the SPL register contains the only stack pointer value (that is, when it points to a system stack in the register file), the SPH register can be used as a general-purpose data register.

However, if an overflow or underflow condition occurs as the result of incrementing or decrementing the stack address in the SPL register during normal stack operations, the value in the SPL register will overflow (or underflow) to the SPH register, overwriting any other data that is currently stored there.

To avoid overwriting data in the SPH register, you can initialize the SPL value to FFH instead of 00H.

Stack operation page is in only *page 0*, regardless the processing page.

☞ PROGRAMMING TIP — Standard Stack Operations Using PUSH and POP

The following example shows you how to perform stack operations in the internal register file using PUSH and POP instructions:

```
LD      SPL,#0FFH       ;  SPL ← FFH (Normally, the SPL is set to 0FFH by the
•                       ;  initialization routine)
•
•
PUSH    PP              ;  Stack address 0FEH ← PP
PUSH    RP0             ;  Stack address 0FDH ← RP0
PUSH    RP1             ;  Stack address 0FCH ← RP1
PUSH    R3              ;  Stack address 0FBH ← R3
•
•
•
POP     R3              ;  R3 ← stack address 0FBH
POP     RP1             ;  RP1 ← stack address 0FCH
POP     RP0             ;  RP0 ← stack address 0FDH
POP     PP              ;  PP ← stack address 0FEH
```

NOTES

3 ADDRESSING MODES

OVERVIEW

Instructions that are stored in program memory are fetched for execution using the program counter. Instructions indicate the operation to be performed and the data to be operated on.

Addressing mode is the method used to determine the location of the data operand. The operands specified in SAM87RC

instructions may be condition codes, immediate data, or a location in the register file, program memory, or data memory.

The SAM87RC instruction set supports seven explicit addressing modes. Not all of these addressing modes are available for each instruction. The addressing modes and their symbols are as follows:

— Register (R)
— Indirect Register (IR)
— Indexed (X)
— Direct Address (DA)
— Indirect Address (IA)
— Relative Address (RA)
— Immediate (IM)

REGISTER ADDRESSING MODE (R)

In Register addressing mode, the operand is the content of a specified register or register pair (see Figure 3-1). Working register addressing differs from Register addressing because it uses a register pointer to specify an 8-byte working register space in the register file and an 8-bit register within that space (see Figure 3-2).

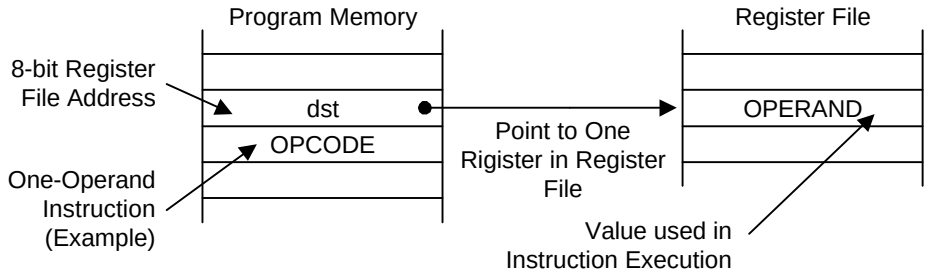

Sample Instruction:

```
DEC     CNTR            ;   Where CNTR is the label of an 8-bit register address
```

Figure 3-1. Register Addressing

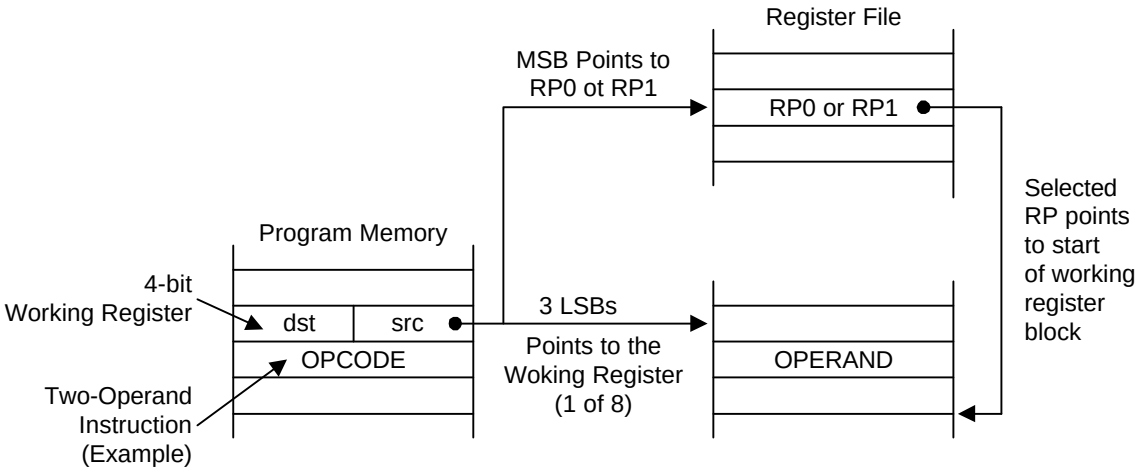

Sample Instruction:

```
ADD     R1, R2          ;   Where R1 and R2 are registers in the currently
                            selected working register area.
```

Figure 3-2. Working Register Addressing

INDIRECT REGISTER ADDRESSING MODE (IR)

In Indirect Register (IR) addressing mode, the content of the specified register or register pair is the address of the operand.

Depending on the instruction used, the actual address may point to a register in the register file, to program memory (ROM), or to an external memory space (see Figures 3-3 through 3-6).

You can use any 8-bit register to indirectly address another register. Any 16-bit register pair can be used to indirectly address another memory location.

You cannot, however, access locations C0H–FFH in set 1 using Indirect Register addressing mode.

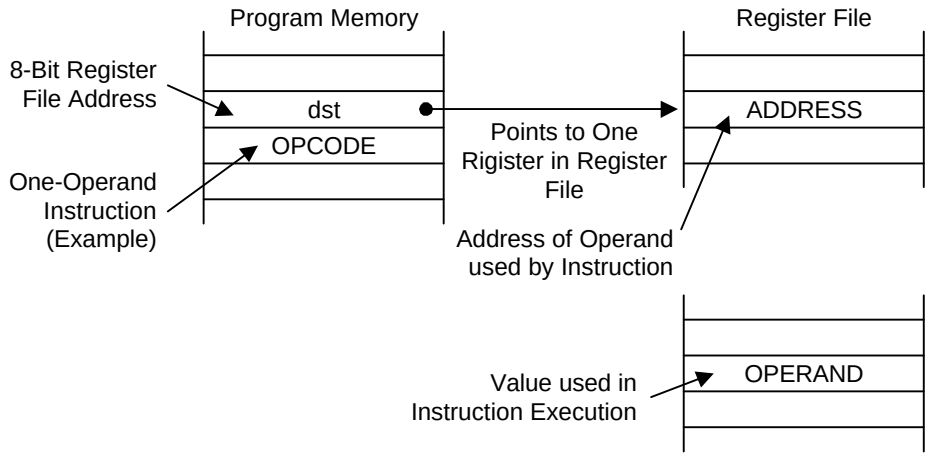

Sample Instruction:

```
RL      @SHIFT          ;   Where SHIFT is the label of an 8-bit register address
```

Figure 3-3. Indirect Register Addressing to Register File

INDIRECT REGISTER ADDRESSING MODE (Continued)

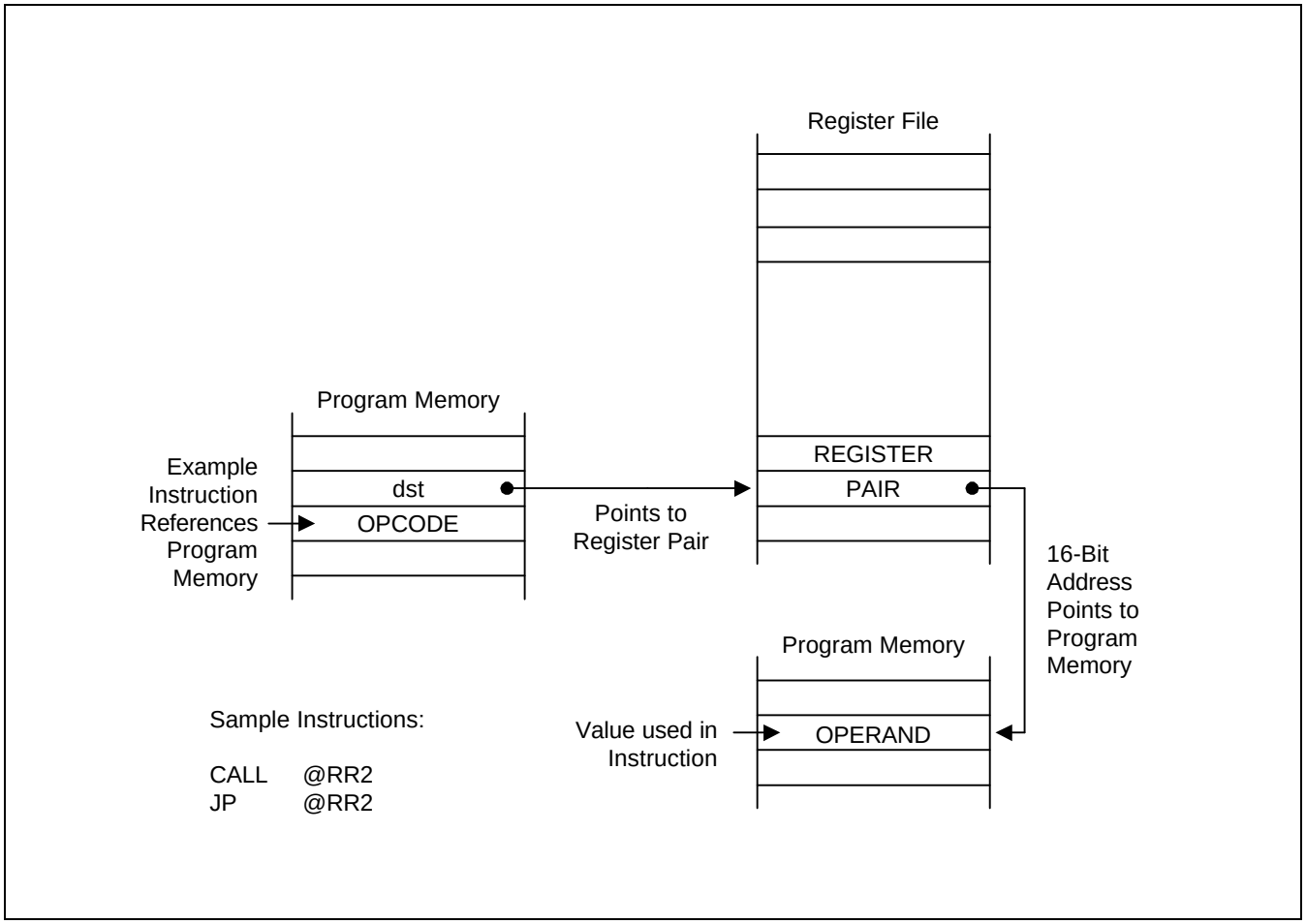

Figure 3-4. Indirect Register Addressing to Program Memory

INDIRECT REGISTER ADDRESSING MODE (Continued)

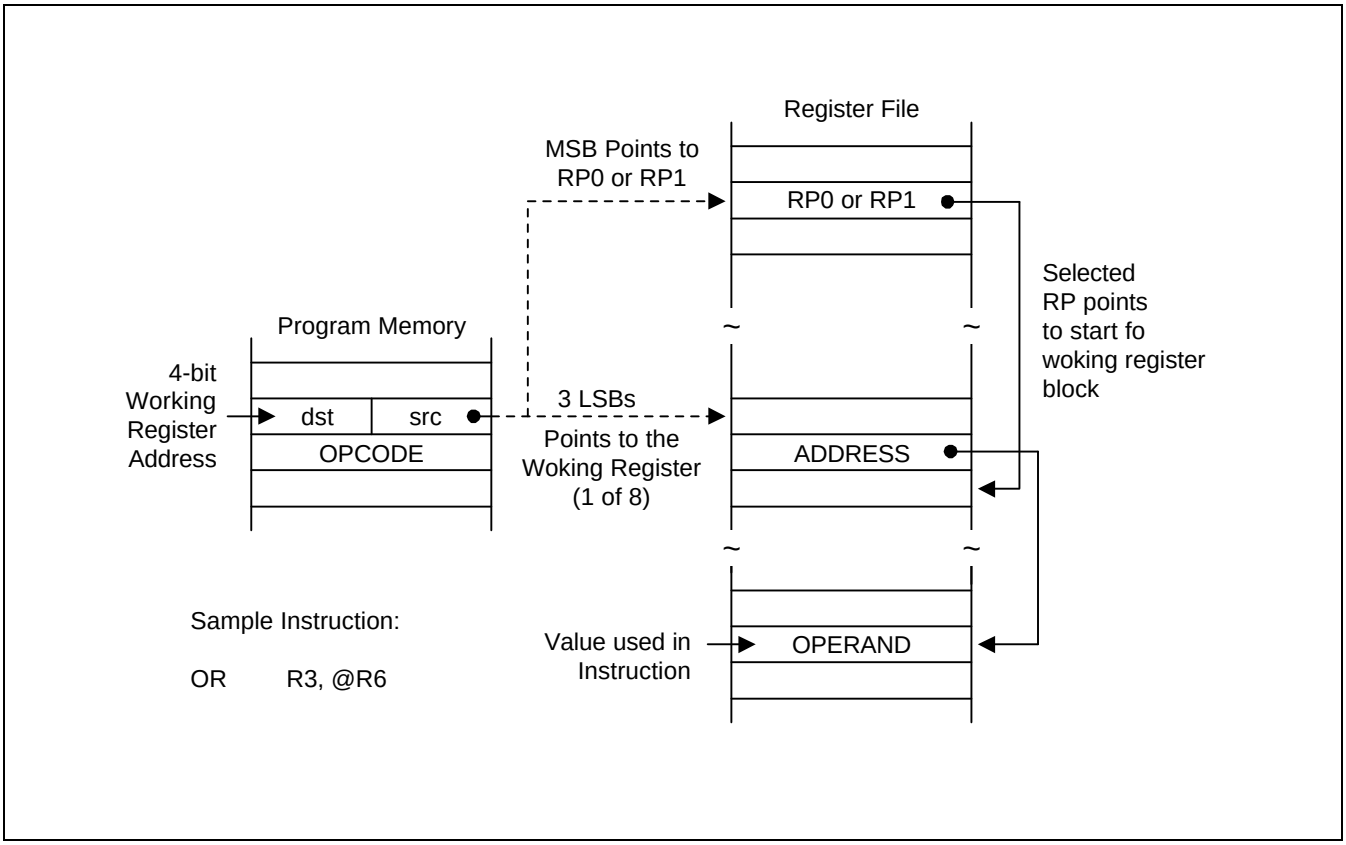

Figure 3-5. Indirect Working Register Addressing to Register File

INDIRECT REGISTER ADDRESSING MODE (Concluded)

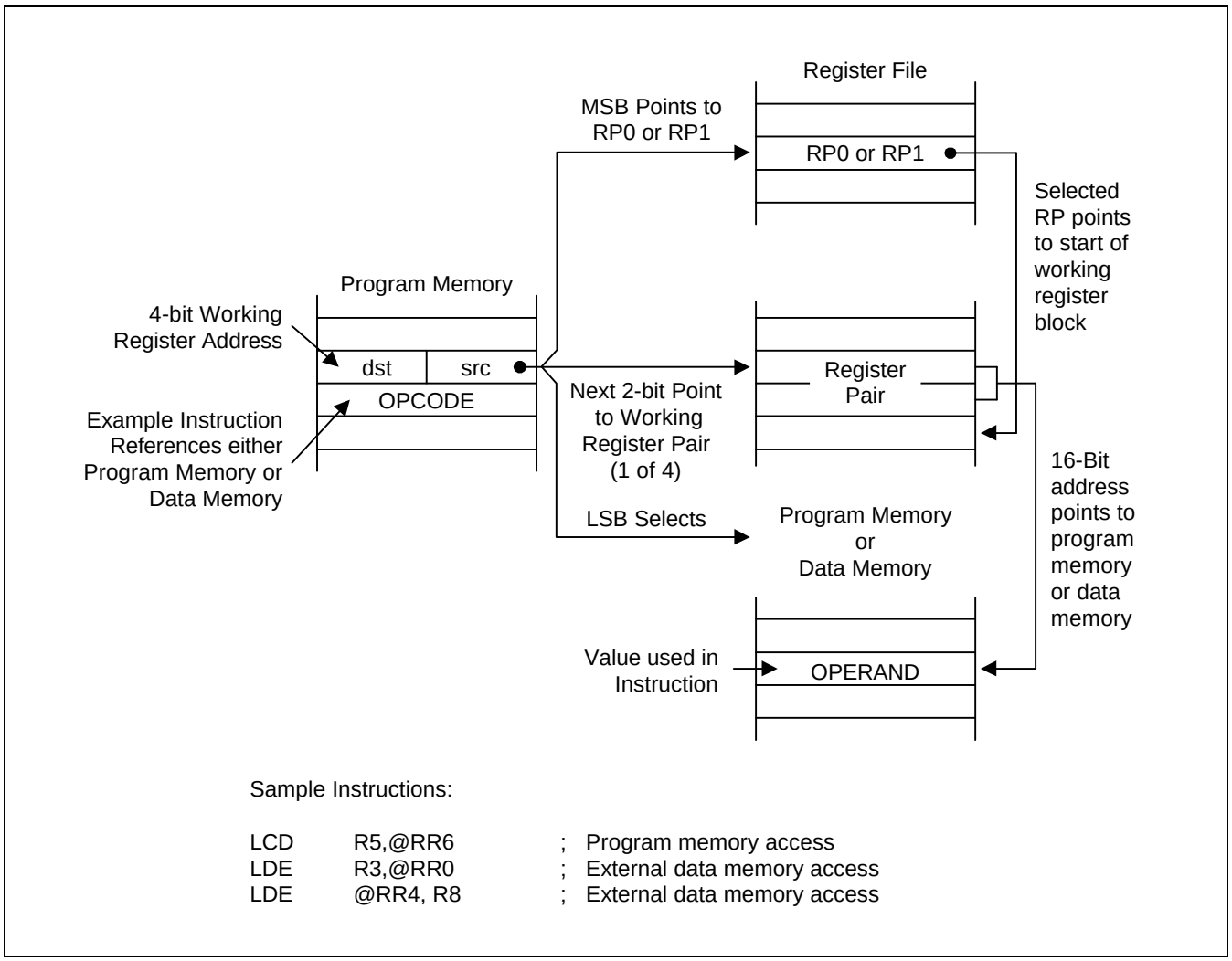

Figure 3-6. Indirect Working Register Addressing to Program or Data Memory

INDEXED ADDRESSING MODE (X)

Indexed (X) addressing mode adds an offset value to a base address during instruction execution in order to calculate the effective operand address (see Figure 3-7). You can use Indexed addressing mode to access locations in the internal register file or in external memory. You cannot, however, access locations C0H–FFH in set 1 using Indexed addressing mode.

In short offset Indexed addressing mode, the 8-bit displacement is treated as a signed integer in the range –128 to +127. This applies to external memory accesses only (see Figure 3-8.)

For register file addressing, an 8-bit base address provided by the instruction is added to an 8-bit offset contained in a working register. For external memory accesses, the base address is stored in the working register pair designated in the instruction. The 8-bit or 16-bit offset given in the instruction is then added to the base address (see Figure 3-9).

The only instruction that supports Indexed addressing mode for the internal register file is the Load instruction (LD). The LDC and LDE instructions support Indexed addressing mode for internal program memory and for external data memory, when implemented.

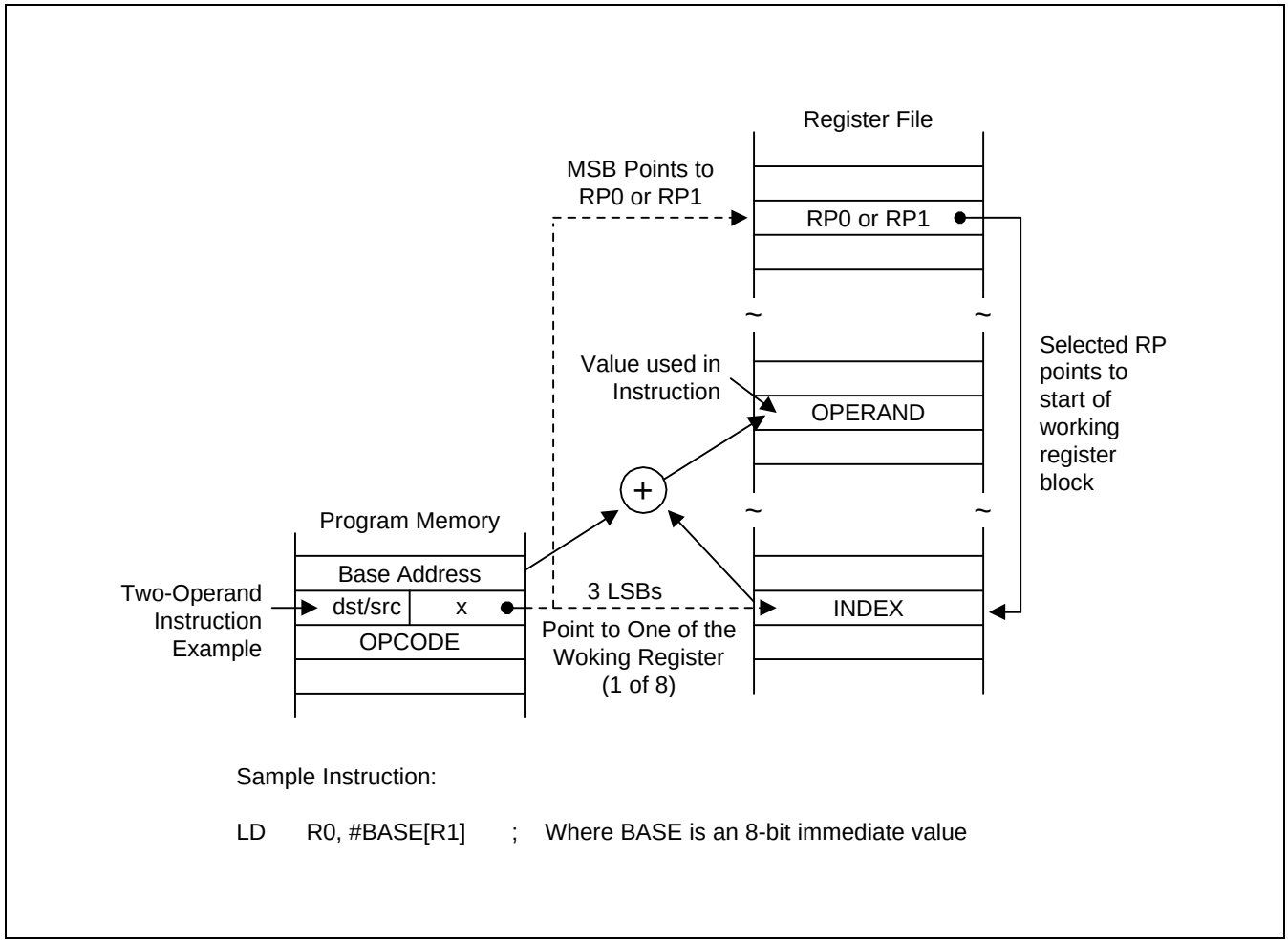

Figure 3-7. Indexed Addressing to Register File

INDEXED ADDRESSING MODE (Continued)

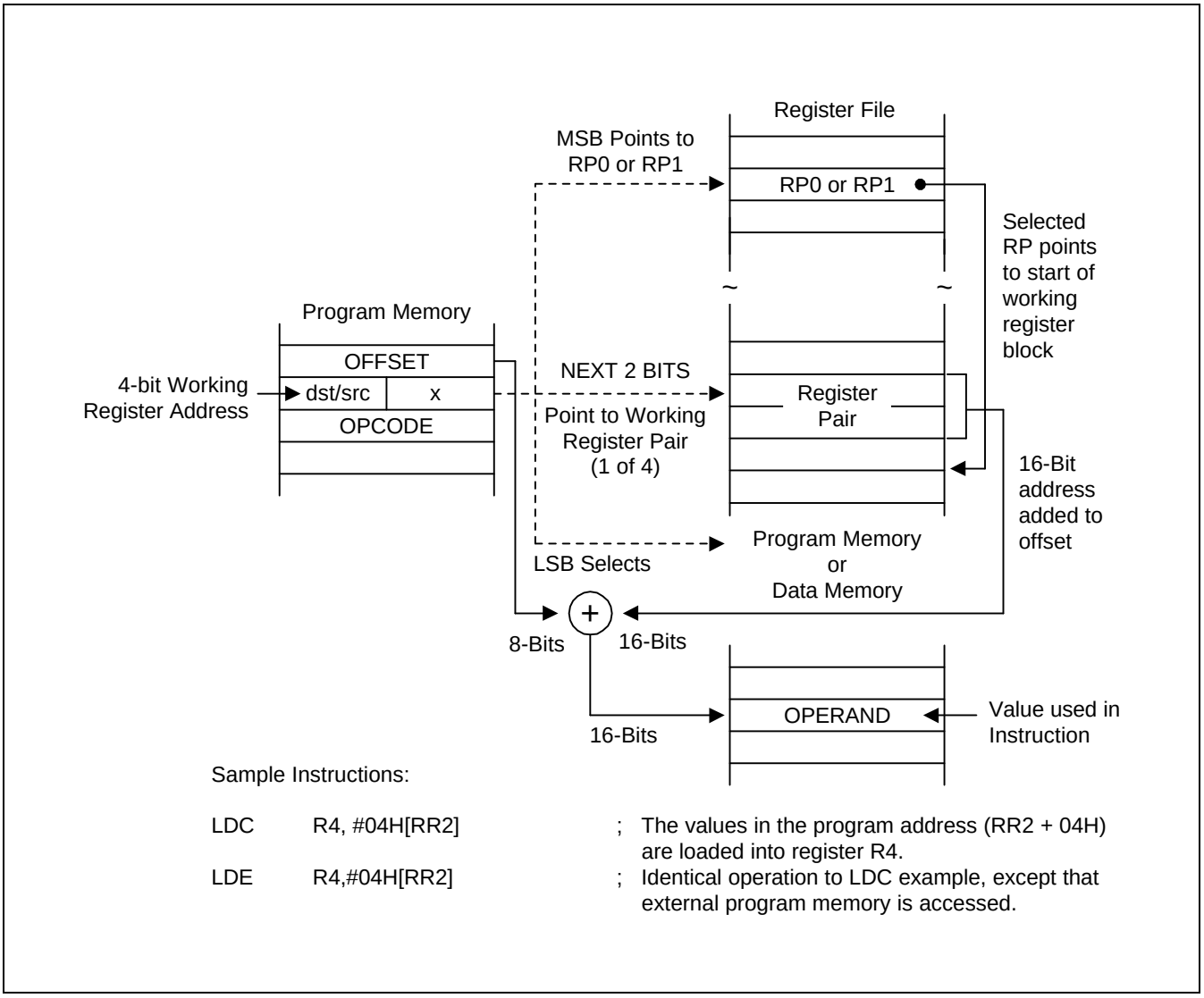

Figure 3-8. Indexed Addressing to Program or Data Memory with Short Offset

INDEXED ADDRESSING MODE (Concluded)

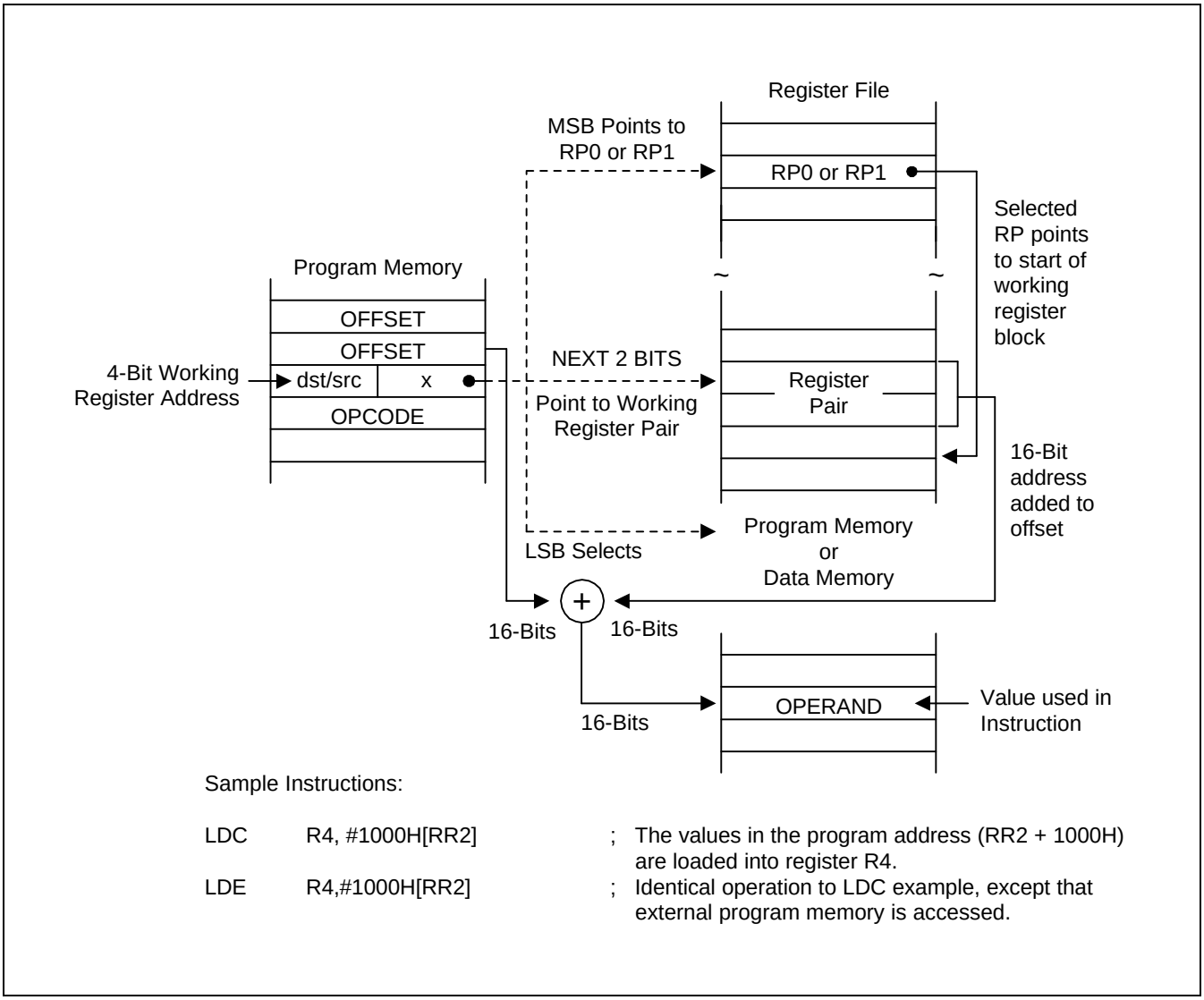

Figure 3-9. Indexed Addressing to Program or Data Memory

DIRECT ADDRESS MODE (DA)

In Direct Address (DA) mode, the instruction provides the operand's 16-bit memory address. Jump (JP) and Call (CALL) instructions use this addressing mode to specify the 16-bit destination address that is loaded into the PC whenever a JP or CALL instruction is executed.

The LDC and LDE instructions can use Direct Address mode to specify the source or destination address for Load operations to program memory (LDC) or to external data memory (LDE), if implemented.

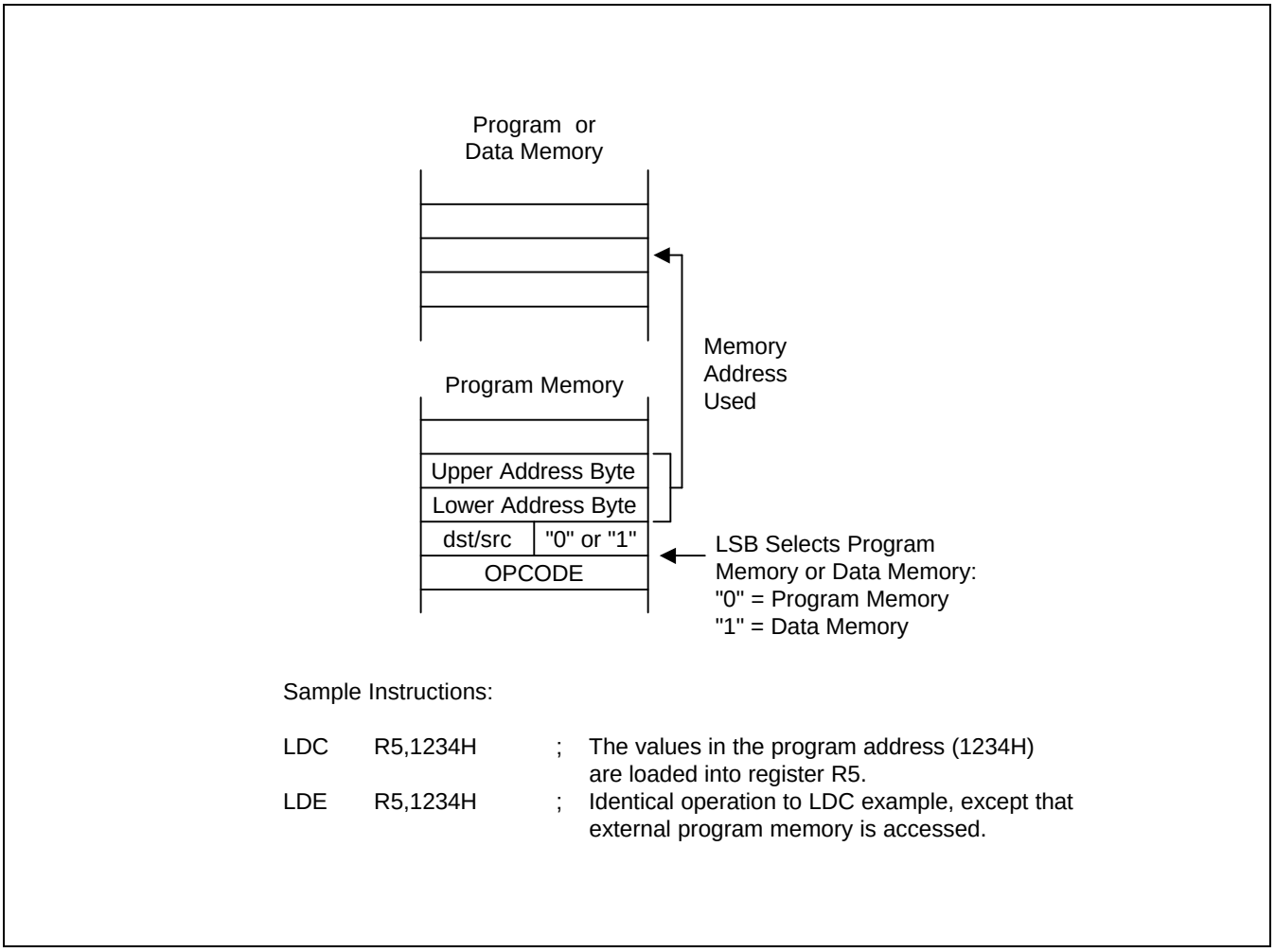

Figure 3-10. Direct Addressing for Load Instructions

DIRECT ADDRESS MODE (Continued)

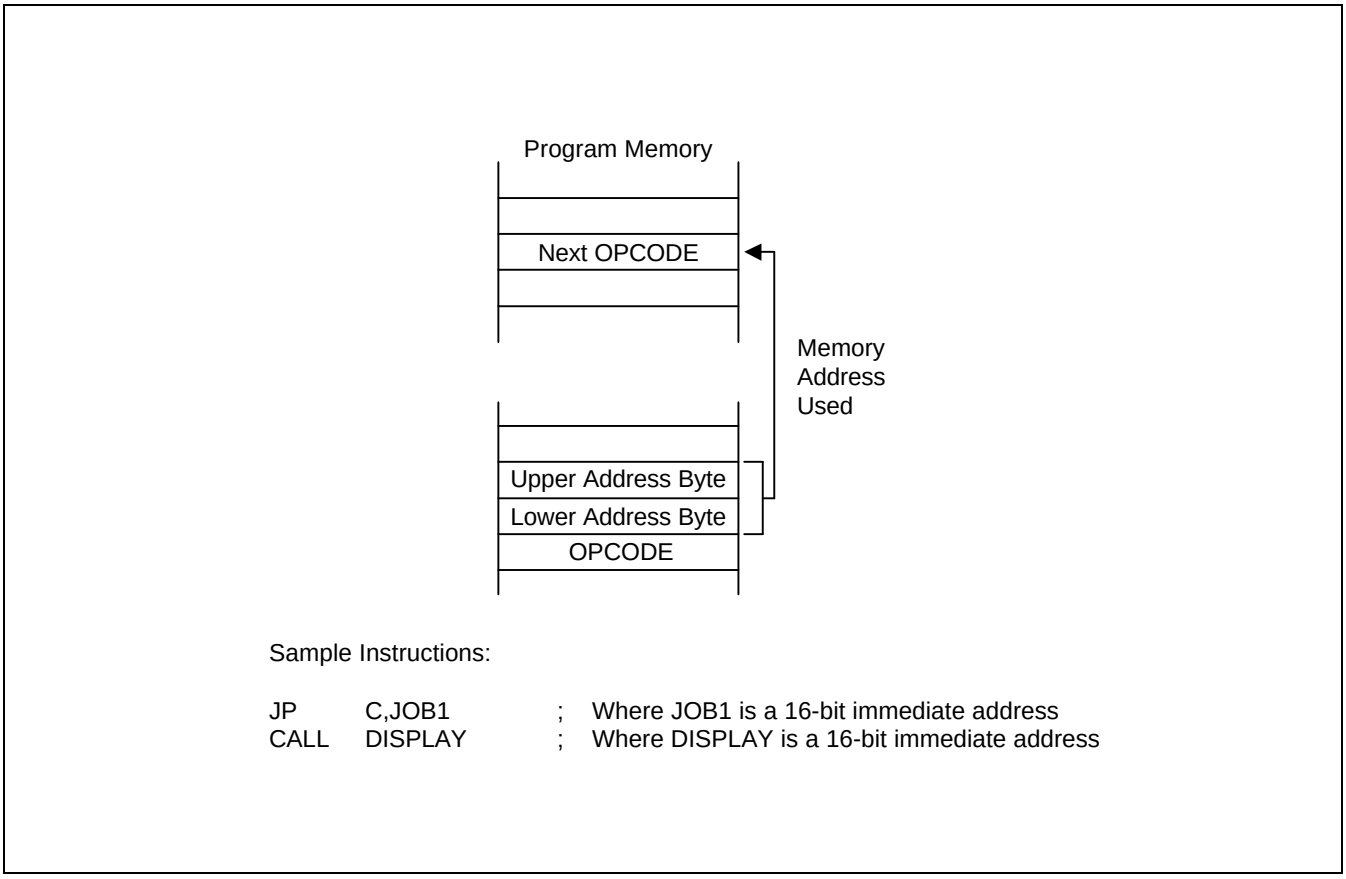

Sample Instructions:

```
JP      C,JOB1          ;   Where JOB1 is a 16-bit immediate address
CALL    DISPLAY         ;   Where DISPLAY is a 16-bit immediate address
```

Figure 3-11. Direct Addressing for Call and Jump Instructions

INDIRECT ADDRESS MODE (IA)

In Indirect Address (IA) mode, the instruction specifies an address located in the lowest 256 bytes of the program memory. The selected pair of memory locations contains the actual address of the next instruction to be executed. Only the CALL instruction can use the Indirect Address mode.

Because the Indirect Address mode assumes that the operand is located in the lowest 256 bytes of program memory, only an 8-bit address is supplied in the instruction; the upper bytes of the destination address are assumed to be all zeros.

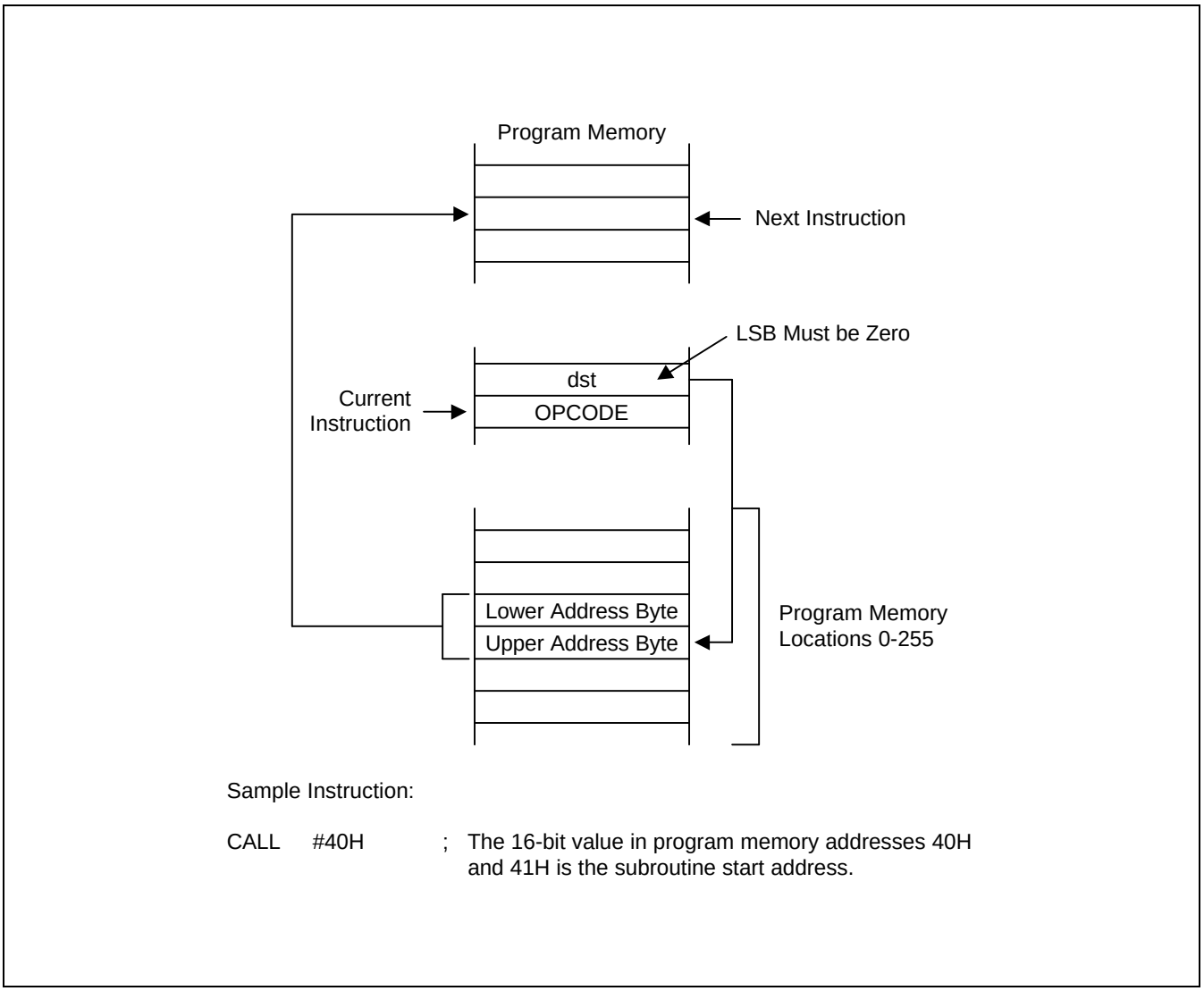

Figure 3-12. Indirect Addressing

RELATIVE ADDRESS MODE (RA)

In Relative Address (RA) mode, a two's-complement signed displacement between – 128 and + 127 is specified in the instruction. The displacement value is then added to the current PC value. The result is the address of the next instruction to be executed. Before this addition occurs, the PC contains the address of the instruction immediately following the current instruction.

Several program control instructions use the Relative Address mode to perform conditional jumps. The instructions that support RA addressing are BTJRF, BTJRT, DJNZ, CPIJE, CPIJNE, and JR.

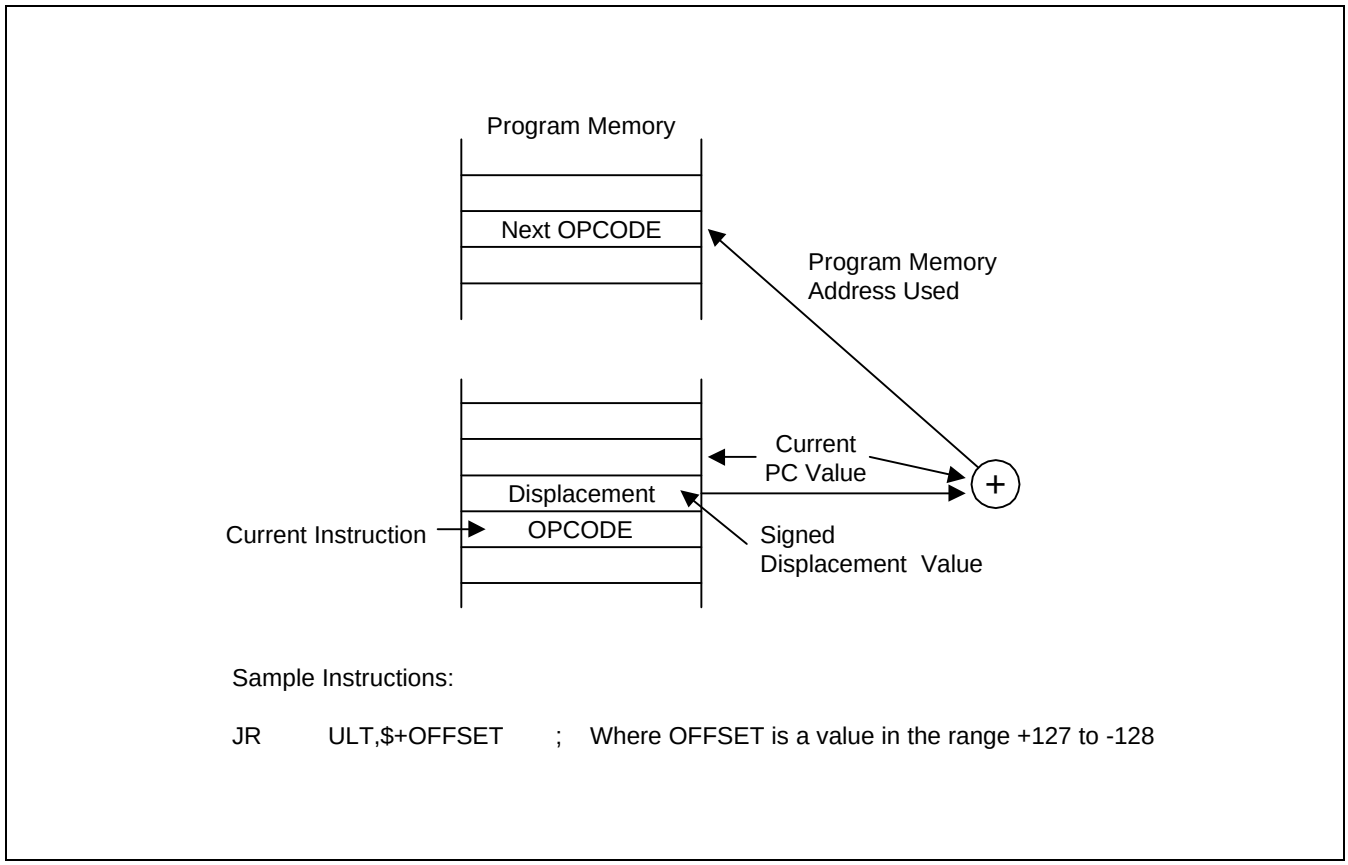

Figure 3-13. Relative Addressing

IMMEDIATE MODE (IM)

In Immediate (IM) addressing mode, the operand value used in the instruction is the value supplied in the operand field itself. The operand may be one byte or one word in length, depending on the instruction used. Immediate addressing mode is useful for loading constant values into registers.

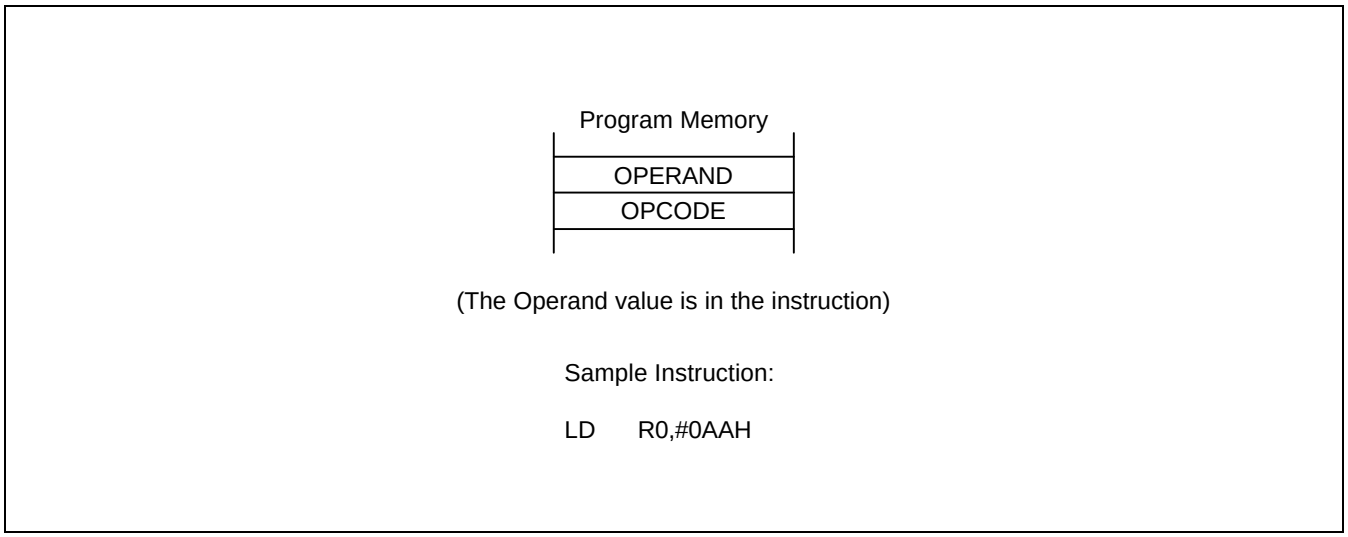

Figure 3-14. Immediate Addressing

4 CONTROL REGISTERS

OVERVIEW

In this section, detailed descriptions of the S3C852B/P852B control registers are presented in an easy-to-read format.

These descriptions will help familiarize you with the mapped locations in the register file. You can also use them as a quick-reference source when writing application programs.

System and peripheral registers are summarized in Tables 4-1, 4-2, and 4-3. Figure 4-1 illustrates the important features of the standard register description format.

CID registers are mapped to Set 2 register page 8.

Control register descriptions are arranged in alphabetical order according to register mnemonic. More information about control registers is presented in the context of the various peripheral hardware descriptions in Part II of this manual.

Table 4-1. Set 1, Bank 0 Registers

Register Name	Mnemonic	Address		R/W	RESET Values(bit)							
		Decimal	Hex		7	6	5	4	3	2	1	0
Timer 0 counter	T0CNT	208	D0H	R	0	0	0	0	0	0	0	0
Timer 0 data register	T0DATA	209	D1H	R/W	1	1	1	1	1	1	1	1
Timer 0 control register	T0CON	210	D2H	R/W	0	0	0	0	0	0	0	0
Basic timer control register	BTCON	211	D3H	R/W	0	0	0	0	0	0	0	0
Clock control register	CLKCON	212	D4H	R/W	0	0	0	0	0	0	0	0
System flags register	FLAGS	213	D5H	R/W	x	x	x	x	x	x	0	0
Register pointer 0	RP0	214	D6H	R/W	1	1	0	0	0	–	–	–
Register pointer 1	RP1	215	D7H	R/W	1	1	0	0	1	–	–	–
Stack pointer (high byte)	SPH	216	D8H	R/W	x	x	x	x	x	x	x	x
Stack pointer (low byte)	SPL	217	D9H	R/W	x	x	x	x	x	x	x	x
Instruction pointer (high byte)	IPH	218	DAH	R/W	x	x	x	x	x	x	x	x
Instruction pointer (low byte)	IPL	219	DBH	R/W	x	x	x	x	x	x	x	x
Interrupt request register	IRQ	220	DCH	R	0	0	0	0	0	0	0	0
Interrupt mask register	IMR	221	DDH	R/W	x	x	x	x	x	x	x	x
System mode register	SYM	222	DEH	R/W	0	–	–	x	x	x	0	0
Register page pointer	PP	223	DFH	R/W	0	0	0	0	0	0	0	0
Port 0 data register	P0	224	E0H	R/W	0	0	0	0	0	0	0	0
Port 1 data register	P1	225	E1H	R/W	0	0	0	0	0	0	0	0
Port 2 data register	P2	226	E2H	R/W	0	0	0	0	0	0	0	0
Port 3 data register	P3	227	E3H	R/W	0	0	0	0	0	0	0	0
Port 4 data register	P4	228	E4H	R/W	0	0	0	0	0	0	0	0
Port 5 data register	P5	229	E5H	R/W	0	0	0	0	0	0	0	0
Port 6 data register	P6	230	E6H	R/W	0	0	0	0	0	0	0	0
Port 0 interrupt control register	P0INT	231	E7H	R/W	–	0	0	0	0	0	0	0
Port 0 interrupt pending register	P0PND	232	E8H	R/W	–	0	0	0	0	0	0	0
Port 0 interrupt state register	P0STA	233	E9H	R/W	–	0	0	0	0	0	0	0
Port 0 control register(high byte)	P0CONH	234	EAH	R/W	0	0	0	0	0	0	0	0
Port 0 control register(low byte)	P0CONL	235	EBH	R/W	0	0	0	0	0	0	0	0
Port 1 control register(high byte)	P1CONH	236	ECH	R/W	0	0	0	0	0	0	0	0
Port 1 control register(low byte)	P1CONL	237	EDH	R/W	0	0	0	0	0	0	0	0
Port 1 function select register	P1AFS	238	EEH	R/W	-	-	-	-	0	0	0	0
Port 2 control register	P2CON	239	EFH	R/W	0	0	0	0	0	0	0	0
Port 3 control register	P3CON	241	F1H	R/W	0	0	0	0	0	0	0	0
Port 3 function select register	P3AFS	242	F2H	R/W	–	–	–	–	0	0	0	0
Port 4 control register	P4CON	243	F3H	R/W	0	0	0	0	0	0	0	0
Port 5 control register	P5CON	244	F4H	R/W	0	0	0	0	0	0	0	0

Table 4-1. Set 1, Bank 0 Registers (Continued)

Register Name	Mnemonic	Address		R/W	RESET Values(bit)							
		Decimal	Hex		7	6	5	4	3	2	1	0
Port 6 control register	P6CON	245	F5H	R/W	0	0	0	0	0	0	0	0
Location F6H-F7H is not mapped.												
Clock output mode register	CLKMOD	248	F8H	R/W	–	–	–	–	–	0	0	0
Interrupt pending register	INTPND	249	F9H	R/W	–	–	–	–	–	0	0	0
Oscillator control register	OSCCON	250	FAH	R/W	–	–	–	–	0	0	–	0
STOP control register	STPCON	251	FBH	R/W	0	0	0	0	0	0	0	0
Location FCH is not mapped.												
Basic timer counter	BTCNT	253	FDH	R	x	x	x	x	x	x	x	x
External Memory timing register	EMT	254	FEH	R/W	–	1	1	1	1	1	0	–
Interrupt priority register	IPR	255	FFH	R/W	x	x	x	x	x	x	x	x

Table 4-2. Set 1, Bank 1 Registers

Register Name	Mnemonic	Address		R/W	RESET Values(bit)							
		Decimal	Hex		7	6	5	4	3	2	1	0
Timer A counter	TACNT	224	E0H	R	0	0	0	0	0	0	0	0
Timer B counter	TBCNT	225	E1H	R	0	0	0	0	0	0	0	0
Timer A data register	TADATA	226	E2H	R/W	1	1	1	1	1	1	1	1
Timer B data register	TBDATA	227	E3H	R/W	1	1	1	1	1	1	1	1
Timer A control register	TACON	228	E4H	R/W	0	0	0	0	0	0	0	0
Timer B control register	TBCON	229	E5H	R/W	0	0	0	0	0	0	0	0
W/T control register	WTCON	230	E6H	R/W	0	0	0	0	0	0	0	0
SIO data register	SIODATA	234	EAH	R/W	1	1	1	1	1	1	1	1
SIO control register	SIOCON	235	EBH	R/W	0	0	0	0	0	0	0	0
SIO Pre-scaler register	SIOPS	236	ECH	R/W	0	0	0	0	0	0	0	0
Port 7 data register	P7	237	EDH	R/W	0	0	0	0	0	0	0	0
A/D data register(high byte)	ADDATAH	242	F2H	R	x	x	x	x	x	x	X	x
A/D data register(low byte)	ADDATAL	243	F3H	R	–	–	–	–	–	–	X	x
A/D control register	ADCON	244	F4H	R/W	0	0	0	0	0	0	0	0
Port 8 data register	P8	245	F5H	R/W	0	0	0	0	0	0	0	0
Port 9 data register	P9	246	F6H	R/W	0	0	0	0	0	0	0	0
Port 10 data register	P10	247	F7H	R/W	0	0	0	0	0	0	0	0
Port 7 control register (high byte)	P7CONH	248	F8H	R/W	0	0	0	0	0	0	0	0
Port 7 control register (low byte)	P7CONL	249	F9H	R/W	0	0	0	0	0	0	0	0
Port 8 control register (high byte)	P8CONH	250	FAH	R/W	0	0	0	0	0	0	0	0
Port 8 control register (low byte)	P8CONL	251	FBH	R/W	0	0	0	0	0	0	0	0
Port 9 control register (high byte)	P9CONH	252	FCH	R/W	0	0	0	0	0	0	0	0
Port 9 control register (low byte)	P9CONL	253	FDH	R/W	0	0	0	0	0	0	0	0
Port 10 control register (high byte)	P10CONH	254	FEH	R/W	0	0	0	0	0	0	0	0
Port 10 control register (low byte)	P10CONL	255	FFH	R/W	0	0	0	0	0	0	0	0

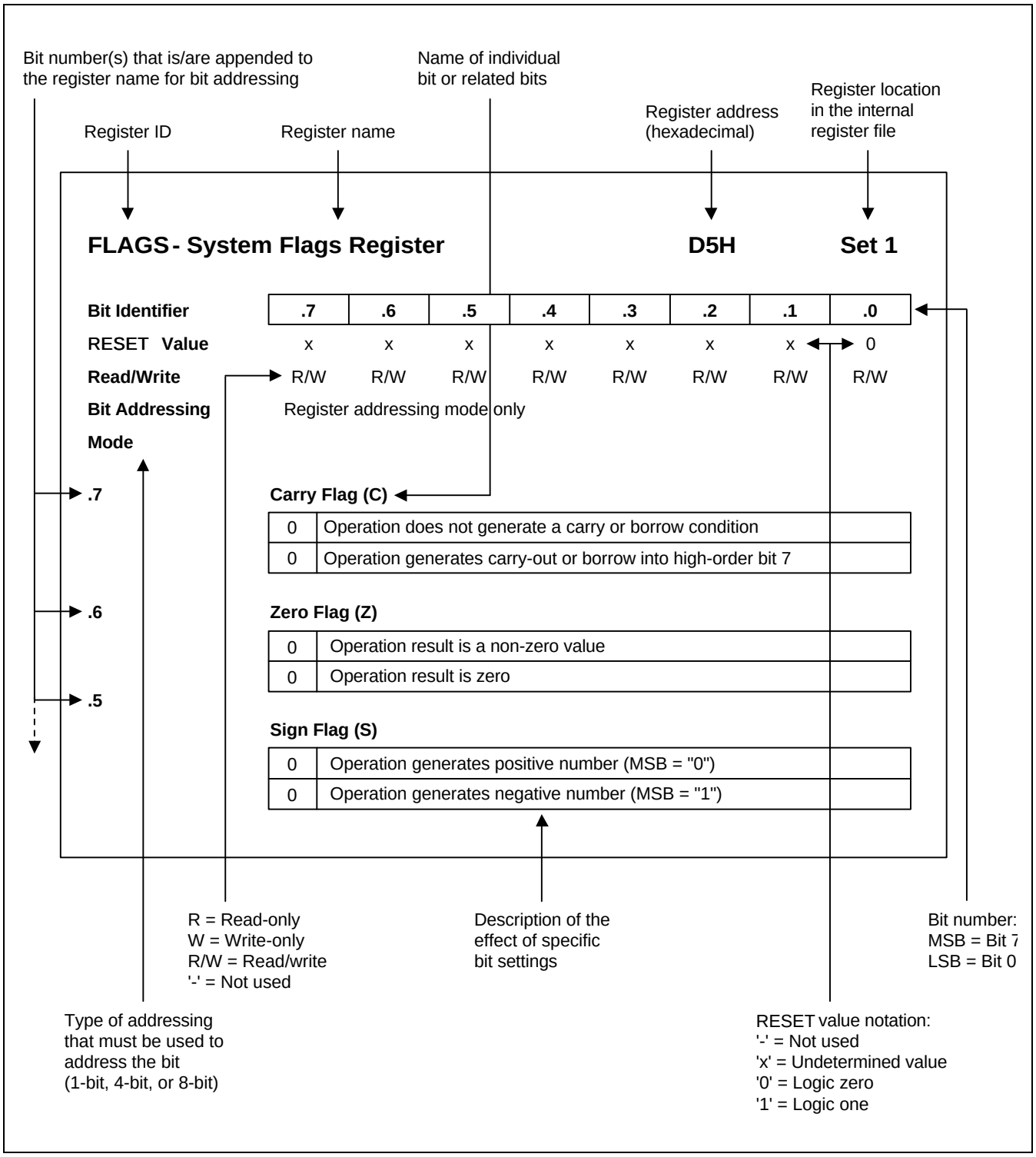

Figure 4-1. Register Description Format

ADCON — A/D Converter Control Register F4H Set 1, Bank 1

Bit Identifier	.7	.6	.5	.4	.3	.2	.1	.0
RESET Value	0	0	0	0	0	0	0	0
Read/Write	–	–	R/W	R/W	R	R/W	R/W	R/W
Addressing Mode	Register addressing mode only							

.7 - .6

Not used for S3C852B/P852B

.5–.4 A/D Converter Analog Input Pin Selection Bits

0	0	ADC0 (P1.0)
0	1	ADC1 (P1.1)
1	0	ADC2 (P1.2)
1	1	ADC3 (P1.3)

.3 End-of-Conversion Bit (Read-only) (note)

0	A/D conversion operation is in progress
1	A/D conversion operation is complete

.2–.1 Clock Source Selection

0	0	fxx/16
0	1	fxx/8
1	0	fxx/4
1	1	fxx/1

.0 Start or Enable Bit

0	Disable operation
1	Start operation

NOTE: This bit is read-only. You can poll ADCON.3 to determine internally when an A/D conversion operation has been completed. A reset operation sets ADCON.3 to "0".

BTCON — Basic Timer Control Register D3H Set 1

Bit Identifier	.7	.6	.5	.4	.3	.2	.1	.0
RESET Value	0	0	0	0	0	0	0	0
Read/Write	R/W	R/W	R/W	R/W	R/W	R/W	R/W	R/W
Addressing Mode	Register addressing mode only							

.7–.4 **Watchdog Timer Function Disable Code (for Reset)**

1	0	1	0	Disable watchdog timer function
Any other value				Enable watchdog timer function

.3 and .2 **Basic Timer Input Clock Selection Bits**

0	0	fxx/4096
0	1	fxx/1024
1	0	fxx/128
1	1	fxx/16

.1 **Basic Timer Counter Clear Bit** (1)

0	No effect
1	Clear the basic timer counter value

.0 **Clock Frequency Divider Clear Bit for Basic Timer** (2)

0	No effect
1	Clear divider

NOTES:

1. When you write a “1” to BTCON.1, the basic timer counter value is cleared to ‘00H’. Immediately following the write operation, the BTCON.1 value is automatically cleared to “0”.
2. When you write a "1" to BTCON.0, the corresponding frequency divider is cleared to '00H'. Immediately following the write operation, the BTCON.0 value is automatically cleared to "0".

CLKCON — System Clock Control Register D4H Set 1

Bit Identifier	.7	.6	.5	.4	.3	.2	.1	.0
RESET Value	0	0	0	0	0	0	0	0
Read/Write	R/W	–	–	R/W	R/W	R/W	R/W	R/W
Addressing Mode	Register addressing mode only							

.7 Oscillator IRQ Wake-up Function Enable Bit

0	Enable IRQ for main system oscillator wake-up in power-down mode
1	Disable IRQ for main system oscillator wake-up in power-down mode

.6 and .5

Not used for S3C852B/P852B

.4 and .3 CPU Clock (System Clock) Selection Bits (1)

0	0	Divide by 16 (fx/16) or fxt
0	1	Divide by 8 (fx/8) or fxt
1	0	Divide by 2 (fx/2) or fxt
1	1	Non-divided clock (fx) or fxt

.2–.0

Not used for S3C852B/P852B

NOTE: After a reset, the slowest clock (divided by 16) is selected as the system clock. To select faster clock speeds, load he appropriate values to CLKCON.3 and CLKCON.4.

CLKMOD — Clock Output Mode Register F8H Set 1, Bank 0

Bit Identifier	.7	.6	.5	.4	.3	.2	.1	.0
RESET Value	–	–	–	–	–	0	0	0
Read/Write	–	–	–	–	–	R/W	R/W	R/W
Addressing Mode	Register addressing mode only							

.7–.3

Not used for S3C852B/P852B

.2 **M signal selection bit**

0	M signal
1	Inversed M signal

.1 and .0 **Output clock selection bits**

0	0	fxx
0	1	fxx/2^3
1	0	fxx/2^6
1	1	CPU clock output

EMT — External Memory Timing Register FEH Set 1, Bank 0

Bit Identifier	.7	.6	.5	.4	.3	.2	.1	.0
RESET Value	–	1	1	1	1	1	0	–
Read/Write	–	–	–	–	–	–	R/W	–
Addressing Mode	Register addressing mode only							

.7–.2

Not used for S3C852B/P852B

.1 **Stack Area Selection Bit**

0	Select internal register file area
1	Select external data memory area

.0

Not used for S3C852B/P852B

FLAGS — System Flags Register D5H Set 1

Bit Identifier	.7	.6	.5	.4	.3	.2	.1	.0
RESET Value	x	x	x	x	x	x	0	0
Read/Write	R/W	R/W	R/W	R/W	R/W	R/W	R/W	R/W
Addressing Mode	Register addressing mode only							

.7 Carry Flag (C)

0	Operation does not generate a carry or borrow condition
1	Operation generates a carry-out or borrow into high-order bit 7

.6 Zero Flag (Z)

0	Operation result is a non-zero value
1	Operation result is zero

.5 Sign Flag (S)

0	Operation generates a positive number (MSB = "0")
1	Operation generates a negative number (MSB = "1")

.4 Overflow Flag (V)

0	Operation result is $\leq +127$ or ≥ -128
1	Operation result is $> +127$ or < -128

.3 Decimal Adjust Flag (D)

0	Add operation completed
1	Subtraction operation completed

.2 Half-Carry Flag (H)

0	No carry-out of bit 3 or no borrow into bit 3 by addition or subtraction
1	Addition generated carry-out of bit 3 or subtraction generated borrow into bit 3

.1 Fast Interrupt Status Flag (FIS)

0	Cleared automatically during an interrupt return (IRET)
1	Automatically set to "1" during a fast interrupt service routine

.0 Bank Address Selection Flag (BA)

0	Bank 0 is selected
1	Bank 1 is selected

IMR — Interrupt Mask Register DDH Set 1

Bit Identifier	.7	.6	.5	.4	.3	.2	.1	.0
RESET Value	x	x	x	x	x	x	x	x
Read/Write	R/W	R/W	–-	R/W	R/W	R/W	R/W	R/W
Addressing Mode	Register addressing mode only							

.7 Interrupt Level 7 (IRQ7) Enable Bit; External Interrupt INT4–INT7

0	Disable IRQ7 interrupts
1	Enable IRQ7 interrupts

.6 Interrupt Level 6 (IRQ6) Enable Bit; External Interrupt INT0–INT3

0	Disable IRQ6 interrupts
1	Enable IRQ6 interrupts

.5

Not used for S3C852B/P852B

.4 Interrupt Level 4 (IRQ4) Enable Bit; Serial data receive/transmit Interrupt

0	Disable IRQ4 interrupts
1	Enable IRQ4 interrupts

.3 Interrupt Level 3 (IRQ3) Enable Bit; Watch Timer overflow

0	Disable IRQ3 interrupts
1	Enable IRQ3 interrupts

.2 Interrupt Level 2 (IRQ2) Enable Bit; CID block Interrupt

0	Disable IRQ2 interrupts
1	Enable IRQ2 interrupts

.1 Interrupt Level 1 (IRQ1) Enable Bit; Timer A match, Timer B match/overflow

0	Disable IRQ1 interrupts
1	Enable IRQ1 interrupts

.0 Interrupt Level 0 (IRQ0) Enable Bit; Timer 0 match/capture/overflow

0	Disable IRQ0 interrupts
1	Enable IRQ0 interrupts

INTPND — Interrupt Pending Register F9H Set 1, Bank 0

Bit Identifier	.7	.6	.5	.4	.3	.2	.1	.0
RESET Value	–	–	–	–	–	0	0	0
Read/Write	–	–	–	–	–	R/W	R/W	R/W
Addressing Mode	Register addressing mode only							

.7–.3	Not used for S3C852B/P852B

.2 Timer B match Interrupt pending bit

0	No interrupt pending
0	*Clear pending bit (write)*
1	Interrupt is pending

.1 Timer B overflow Interrupt pending bit

0	No interrupt pending
0	*Clear pending bit (write)*
1	Interrupt is pending

.0 Timer 0 overflow Interrupt pending bit

0	No interrupt pending
0	*Clear pending bit (write)*
1	Interrupt is pending

IPH — Instruction Pointer (High Byte) DAH Set 1

Bit Identifier	.7	.6	.5	.4	.3	.2	.1	.0
RESET Value	x	x	x	x	x	x	x	x
Read/Write	R/W	R/W	R/W	R/W	R/W	R/W	R/W	R/W
Addressing Mode	Register addressing mode only							

.7–.0 Instruction Pointer Address (High Byte)

The high-byte instruction pointer value is the upper eight bits of the 16-bit instruction pointer address (IP15–IP8). The lower byte of the IP address is located in the IPL register (DBH).

IPL — Instruction Pointer (Low Byte) DBH Set 1

Bit Identifier	.7	.6	.5	.4	.3	.2	.1	.0
RESET Value	x	x	x	x	x	x	x	x
Read/Write	R/W	R/W	R/W	R/W	R/W	R/W	R/W	R/W
Addressing Mode	Register addressing mode only							

.7–.0 Instruction Pointer Address (Low Byte)

The low-byte instruction pointer value is the lower eight bits of the 16-bit instruction pointer address (IP7–IP0). The upper byte of the IP address is located in the IPH register (DAH).

IPR — Interrupt Priority Register FFH Set 1, Bank 0

Bit Identifier	.7	.6	.5	.4	.3	.2	.1	.0
RESET Value	x	x	x	x	x	x	x	x
Read/Write	R/W	R/W	–	R/W	R/W	R/W	R/W	R/W
Addressing Mode	Register addressing mode only							

.7, .4, and .1 **Priority Control Bits for Interrupt Groups A, B, and C**

0	0	0	Group priority undefined
0	0	1	B > C > A
0	1	0	A > B > C
0	1	1	B > A > C
1	0	0	C > A > B
1	0	1	C > B > A
1	1	0	A > C > B
1	1	1	Group priority undefined

.6 **Interrupt Subgroup C Priority Control Bit**

0	IRQ6 > IRQ7
1	IRQ7 > IRQ6

.5

Not used for S3C852B/P852B

.3 **Interrupt Group B Priority Control Bit**

0	IRQ3 > IRQ4
1	IRQ4 > IRQ3

.2 **Interrupt Group B Priority Control Bit**

0	IRQ2 > (IRQ3, IRQ4)
1	(IRQ3, IRQ4) > IRQ2

.0 **Interrupt Group A Priority Control Bit**

0	IRQ0 > IRQ1
1	IRQ1 > IRQ0

NOTE: Interrupt group A is IRQ0 and IRQ1; interrupt group B is IRQ3, IRQ4 and IRQ2; interrupt group C is IRQ6, and IRQ7.

IRQ — Interrupt Request Register DCH Set 1

Bit Identifier	.7	.6	.5	.4	.3	.2	.1	.0
RESET Value	0	0	–	0	0	0	0	0
Read/Write	R	R	–	R	R	R	R	R
Addressing Mode	Register addressing mode only							

.7 Interrupt Level 7 (IRQ7) Request Pending Bit; INT4–INT7

0	No IRQ7 interrupt pending
1	IRQ7 interrupt is pending

.6 Interrupt Level 6 (IRQ6) Request Pending Bit; INT0–INT3

0	No IRQ6 interrupt pending
1	IRQ6 interrupt is pending

.5

Not used for S3C852B/P852B

.4 Interrupt Level 4 (IRQ4) Request Pending Bit; Serial data receive/transmit interrupt

0	No IRQ4 interrupt pending
1	IRQ4 interrupt is pending

.3 Interrupt Level 3 (IRQ3) Request Pending Bit; Watch Timer overflow

0	No IRQ3 interrupt pending
1	IRQ3 interrupt is pending

.2 Interrupt Level 2 (IRQ2) Request Pending Bit; Caller ID functions

0	No IRQ2 interrupt pending
1	IRQ2 interrupt pending

.1 Interrupt Level 1 (IRQ1) Request Pending Bit; Timer A match, Timer B match/overflow

0	No IRQ1 interrupt pending
1	IRQ1 interrupt is pending

.0 Interrupt Level 0 (IRQ0) Request Pending Bit; Timer 0 match/capture/overflow

0	No IRQ0 interrupt pending
1	IRQ0 interrupt is pending

OSCCON — oscillator Control Register FAH Set 1, Bank 0

Bit Identifier	.7	.6	.5	.4	.3	.2	.1	.0
RESET Value	–	–	–	–	0	0	–	0
Read/Write	–	–	–	–	R/W	R/W	–	R/W
Addressing Mode	Register addressing mode only							

.7–.4

Not used for S3C852B/P852B

.3 **Main system oscillator control bit**

0	Main system oscillator RUN
1	Main system oscillator STOP

.2 **Subsystem oscillator control bit**

0	Subsystem oscillator RUN
1	Subsystem oscillator STOP

.1

Not used for S3C852B/P852B

.0 **System clock selection bit**

0	Select Main system clock
1	Select Subsystem clock

P0CONH — Port 0 Control Register (High byte) EAH Set 1, Bank 0

Bit Identifier	.7	.6	.5	.4	.3	.2	.1	.0
RESET Value	0	0	0	0	0	0	0	0
Read/Write	R/W	R/W	R/W	R/W	R/W	R/W	R/W	R/W
Addressing Mode	Register addressing mode only							

.7–.6 **Port 0.7/INT7**

0	0	Input, Schmitt trigger
0	1	Input, Schmitt trigger, Pull-up resistor
1	0	Output, Push-pull
1	1	Not used

.5–.4 **Port 0.6/INT6/TB**

0	0	Input, Schmitt trigger
0	1	Input, Schmitt trigger, Pull-up resistor
1	0	Output, Push-pull
1	1	Select alternative function for TB

.3–.2 **Port 0.5/INT5/TA**

0	0	Input, Schmitt trigger
0	1	Input, Schmitt trigger, Pull-up resistor
1	0	Output, Push-pull
1	1	Select alternative function for TA

.1–.0 **Port 0.4/INT4/T1CK**

0	0	Input, Schmitt trigger (T1CK)
0	1	Input, Schmitt trigger, Pull-up resistor (T1CK)
1	0	Output, Push-pull
1	1	Not used

P0CONL — Port 0 Control Register(Low byte) EBH Set 1, Bank 0

Bit Identifier	.7	.6	.5	.4	.3	.2	.1	.0
RESET Value	0	0	0	0	0	0	0	0
Read/Write	R/W	R/W	R/W	R/W	R/W	R/W	R/W	R/W
Addressing Mode	Register addressing mode only							

.7–.6 **Port 0.3/INT3/T0/T0CAP**

0	0	Input, Schmitt trigger (T0CAP)
0	1	Input, Schmitt trigger, Pull-up resistor (T0 CAP)
1	0	Output, Push-pull
1	1	Select alternative function for T0

.5–.4 **Port 0.2/INT2/T0CK**

0	0	Input, Schmitt trigger (T0CK)
0	1	Input, Schmitt trigger, Pull-up resistor (T0CK)
1	0	Output, Push-pull
1	1	Not used

.3–.2 **Port 0.1/INT1/BUZ**

0	0	Input, Schmitt trigger
0	1	Input, Schmitt trigger, Pull-up resistor
1	0	Output, Push-pull
1	1	Select alternative function for BUZ

.1–.0 **Port 0.0/INT0**

0	0	Input, Schmitt trigger
0	1	Input, Schmitt trigger, Pull-up resistor
1	0	Output, Push-pull
1	1	Not used

P0INT — Port 0 Interrupt Enable Register E7H Set 1, Bank 0

Bit Identifier	.7	.6	.5	.4	.3	.2	.1	.0
RESET Value	0	0	0	0	0	0	0	0
Read/Write	R/W	R/W	R/W	R/W	R/W	R/W	R/W	R/W
Addressing Mode	Register addressing mode only							

.7 INT7/P0.7 Interrupt Enable bit

0	Disable INT7
1	Enable INT7

.6 INT6/P0.6 Interrupt Enable bit

0	Disable INT6
1	Enable INT6

.5 INT5/P0.5 Interrupt Enable bit

0	Disable INT5
1	Enable INT5

.4 INT4/P0.4 Interrupt Enable bit

0	Disable INT4
1	Enable INT4

.3 INT3/P0.3 Interrupt Enable bit

0	Disable INT3
1	Enable INT3

.2 INT2/P0.2 Interrupt Enable bit

0	Disable INT2
1	Enable INT2

.1 INT1/P0.1 Interrupt Enable bit

0	Disable INT1
1	Enable INT1

.0 INT0/P0.0 Interrupt Enable bit

0	Disable INT0
1	Enable INT0

P0PND — Port 0 Interrupt Pending Register E8H Set 1, Bank 0

Bit Identifier	.7	.6	.5	.4	.3	.2	.1	.0
RESET Value	0	0	0	0	0	0	0	0
Read/Write	R/W	R/W	R/W	R/W	R/W	R/W	R/W	R/W
Addressing Mode	Register addressing mode only							

.7 INT7/P0.7 Interrupt Pending bit

0	INT7 Interrupt request is not pending
1	INT7 Interrupt request is pending

.6 INT6/P0.6 Interrupt Pending bit

0	INT6 Interrupt request is not pending
1	INT6 Interrupt request is pending

.5 INT5/P0.5 Interrupt Pending bit

0	INT5 Interrupt request is not pending
1	INT5 Interrupt request is pending

.4 INT4/P0.4 Interrupt Pending bit

0	INT4 Interrupt request is not pending
1	INT4 Interrupt request is pending

.3 INT3/P0.3 Interrupt Pending bit

0	INT3 Interrupt request is not pending
1	INT3 Interrupt request is pending

.2 INT2/P0.2 Interrupt Pending bit

0	INT2 Interrupt request is not pending
1	INT2 Interrupt request is pending

.1 INT1/P0.1 Interrupt Pending bit

0	INT1 Interrupt request is not pending
1	INT1 Interrupt request is pending

.0 INT0/P0.0 Interrupt Pending bit

0	INT0 Interrupt request is not pending
1	INT0 Interrupt request is pending

P0STA — Port 0 Interrupt State Register E9H Set 1, Bank 0

Bit Identifier	.7	.6	.5	.4	.3	.2	.1	.0
RESET Value	0	0	0	0	0	0	0	0
Read/Write	R/W	R/W	R/W	R/W	R/W	R/W	R/W	R/W
Addressing Mode	Register addressing mode only							

.7 INT7/P0.7 Interrupt State Setting bit

0	INT7 falling edge detection
1	INT7 rising edge detection

.6 INT6/P0.6 Interrupt State Setting bit

0	INT6 falling edge detection
1	INT6 rising edge detection

.5 INT5/P0.5 Interrupt State Setting bit

0	INT5 falling edge detection
1	INT5 rising edge detection

.4 INT4/P0.4 Interrupt State Setting bit

0	INT4 falling edge detection
1	INT4 rising edge detection

.3 INT3/P0.3 Interrupt State Setting bit

0	INT3 falling edge detection
1	INT3 rising edge detection

.2 INT2/P0.2 Interrupt State Setting bit

0	INT2 falling edge detection
1	INT2 rising edge detection

.1 INT1/P0.1 Interrupt State Setting bit

0	INT1 falling edge detection
1	INT1 rising edge detection

.0 INT0/P0.0 Interrupt State Setting bit

0	INT0 falling edge detection
1	INT0 rising edge detection

P1AFS — Port 1 Function Select Register EEH Set 1, Bank 0

Bit Identifier	.7	.6	.5	.4	.3	.2	.1	.0
RESET Value	–	0	0	0	0	0	0	0
Read/Write	–	R/W	R/W	R/W	R/W	R/W	R/W	R/W
Addressing Mode	Register addressing mode only							

.7

Not used for S3C852B/P852B

.6 **Port 1.6/SCK**

0	Normal I/O port
1	Select alternative function for SCK

.5 **Port 1.5/SO**

0	Normal I/O port
1	Select alternative function for SO

.4 **Port 1.4/SI**

0	Normal I/O port
1	Select alternative function for SI

.3 **Port 1.3/ADC3**

0	Normal I/O port
1	Select Analog Input function for ADC3

.2 **Port 1.2/ADC2**

0	Normal I/O port
1	Select Analog Input function for ADC2

.1 **Port 1.1/ADC1**

0	Normal I/O port
1	Select Analog Input function for ADC1

.0 **Port 1.0/ADC0**

0	Normal I/O port
1	Select Analog Input function for ADC0

P1CONH — Port 1 Control Register(High byte) ECH Set 1, Bank 0

Bit Identifier	.7	.6	.5	.4	.3	.2	.1	.0
RESET Value	0	0	0	0	0	0	0	0
Read/Write	R/W	R/W	R/W	R/W	R/W	R/W	R/W	R/W
Addressing Mode	Register addressing mode only							

.7–.6 **Port 1.7**

0	0	Input, Schmitt trigger
0	1	Input, Schmitt trigger, Pull-up resistor
1	0	Output, Push-pull
1	1	Output, Open-drain

.5–.4 **Port 1.6**

0	0	Input, Schmitt trigger
0	1	Input, Schmitt trigger, Pull-up resistor
1	0	Output, Push-pull
1	1	Output, Open-drain

.3–.2 **Port 1.5**

0	0	Input, Schmitt trigger
0	1	Input, Schmitt trigger, Pull-up resistor
1	0	Output, Push-pull
1	1	Output, Open-drain

.1–.0 **Port 1.4**

0	0	Input, Schmitt trigger
0	1	Input, Schmitt trigger, Pull-up resistor
1	0	Output, Push-pull
1	1	Output, Open-drain

P1CONL — Port 1 Control Register(Low byte) EDH Set 1, Bank 0

Bit Identifier	.7	.6	.5	.4	.3	.2	.1	.0
RESET Value	0	0	0	0	0	0	0	0
Read/Write	R/W	R/W	R/W	R/W	R/W	R/W	R/W	R/W
Addressing Mode	Register addressing mode only							

.7–.6 **Port 1.3/ADC3**

0	0	Input, Schmitt trigger
0	1	Input, Schmitt trigger, Pull-up resistor
1	0	Output, Push-pull
1	1	Output, Open-drain

.5–.4 **Port 1.2/ADC2**

0	0	Input, Schmitt trigger
0	1	Input, Schmitt trigger, Pull-up resistor
1	0	Output, Push-pull
1	1	Output, Open-drain

.3–.2 **Port 1.1/ADC1**

0	0	Input, Schmitt trigger
0	1	Input, Schmitt trigger, Pull-up resistor
1	0	Output, Push-pull
1	1	Output, Open-drain

.1–.0 **Port 1.0/ADC0**

0	0	Input, Schmitt trigger
0	1	Input, Schmitt trigger, Pull-up resistor
1	0	Output, Push-pull
1	1	Output, Open-drain

P2CON — Port 2 Control Register EFH Set 1, Bank 0

Bit Identifier	.7	.6	.5	.4	.3	.2	.1	.0
RESET Value	0	0	0	0	0	0	0	0
Read/Write	R/W	R/W	R/W	R/W	R/W	R/W	R/W	R/W
Addressing Mode	Register addressing mode only							

.7–.6 **Port 2.3**

0	0	Input, Schmitt trigger
0	1	Input, Schmitt trigger, Pull-up resistor
1	0	Output, Push-pull
1	1	Output, Open-drain

.5– .4 **Port 2.2**

0	0	Input, Schmitt trigger
0	1	Input, Schmitt trigger, Pull-up resistor
1	0	Output, Push-pull
1	1	Output, Open-drain

.3–2 **Port 2.1**

0	0	Input, Schmitt trigger
0	1	Input, Schmitt trigger, Pull-up resistor
1	0	Output, Push-pull
1	1	Output, Open-drain

.1– .0 **Port 2.0**

0	0	Input, Schmitt trigger
0	1	Input, Schmitt trigger, Pull-up resistor
1	0	Output, Push-pull
1	1	Output, Open-drain

P3AFS — Port 3 Function Select Register F2H Set 1, Bank 0

Bit Identifier	.7	.6	.5	.4	.3	.2	.1	.0
RESET Value	–	–	–	–	0	0	0	0
Read/Write	–	–	–	–	R/W	R/W	R/W	R/W
Addressing Mode	Register addressing mode only							

.7–.4

Not used for S3C852B/P852B

.3

Port 3.3/WR

0	Normal I/O port
1	Select alternative function for WR

.2

Port 3.2/RD

0	Normal I/O port
1	Select alternative function for RD

.1

Port 3.1/DM

0	Normal I/O port
1	Select alternative function for DM

.0

Port 3.0/PM

0	Normal I/O port
1	Select alternative function for PM

P3CON — Port 3 Control Register F1H Set 1, Bank 0

Bit Identifier	.7	.6	.5	.4	.3	.2	.1	.0
RESET Value	0	0	0	0	0	0	0	0
Read/Write	R/W	R/W	R/W	R/W	R/W	R/W	R/W	R/W
Addressing Mode	Register addressing mode only							

.7–.6 **Port 3.3/WR**

0	0	Input, Schmitt trigger
0	1	Input, Schmitt trigger, Pull-up resistor
1	0	Output, Push-pull
1	1	Output, Open-drain

.5–.4 **Port 3.2/RD**

0	0	Input, Schmitt trigger
0	1	Input, Schmitt trigger, Pull-up resistor
1	0	Output, Push-pull
1	1	Output, Open-drain

.3–.2 **Port 3.1/DM**

0	0	Input, Schmitt trigger
0	1	Input, Schmitt trigger, Pull-up resistor
1	0	Output, Push-pull
1	1	Output, Open-drain

.1–.0 **Port 3.0/PM**

0	0	Input, Schmitt trigger
0	1	Input, Schmitt trigger, Pull-up resistor
1	0	Output, Push-pull
1	1	Output, Open-drain

P4CON — Port 4 Control Register F3H Set 1, Bank 0

Bit Identifier	.7	.6	.5	.4	.3	.2	.1	.0
RESET Value	0	0	0	0	0	0	0	0
Read/Write	R/W	R/W	R/W	R/W	R/W	R/W	R/W	R/W
Addressing Mode	Register addressing mode only							

.7–.4 **Port 4.7–Port 4.4/D7–D4**

0	0	0	0	Input, Schmitt trigger
0	0	0	1	Input, Schmitt trigger, pull-up resistor
0	0	1	0	Output, Push-Pull
0	0	1	1	Output, Open-drain
0	1	0	0	Select External memory interface line at D7–D4

.3–.0 **Port 4.3–Port 4.0/D3–D0**

0	0	0	0	Input, Schmitt trigger
0	0	0	1	Input, Schmitt trigger, pull-up resistor
0	0	1	0	Output, Push-Pull
0	0	1	1	Output, Open-drain
0	1	0	0	Select External memory interface line at D3–D0

P5CON — Port 5 Control Register F4H Set 1, Bank 0

Bit Identifier	.7	.6	.5	.4	.3	.2	.1	.0
RESET Value	0	0	0	0	0	0	0	0
Read/Write	R/W	R/W	R/W	R/W	R/W	R/W	R/W	R/W
Addressing Mode	Register addressing mode only							

.7–.4 **Port 5.7–Port 5.4/A7–A4**

0	0	0	0	Input, Schmitt trigger
0	0	0	1	Input, Schmitt trigger, pull-up resistor
0	0	1	0	Output, Push-Pull
0	0	1	1	Output, Open-drain
0	1	0	0	Select External memory interface line at A7–A4

.3–.0 **Port 5.3–Port 5.0/A3–A0**

0	0	0	0	Input, Schmitt trigger
0	0	0	1	Input, Schmitt trigger, pull-up resistor
0	0	1	0	Output, Push-Pull
0	0	1	1	Output, Open-drain
0	1	0	0	Select External memory interface line at A3–A0

P6CON — Port 6 Control Register F5H Set 1, Bank 0

Bit Identifier	.7	.6	.5	.4	.3	.2	.1	.0
RESET Value	0	0	0	0	0	0	0	0
Read/Write	R/W	R/W	R/W	R/W	R/W	R/W	R/W	R/W
Addressing Mode	Register addressing mode only							

.7–4 **Port 6.7–Port 6.4/A15–A12**

0	0	0	0	Input, Schmitt trigger
0	0	0	1	Input, Schmitt trigger, pull-up resistor
0	0	1	0	Output, Push-Pull
0	0	1	1	Output, Open-drain
0	1	0	0	Select External memory interface line at A15–A12

.3–0 **Port 6.3–Port 6.0/A11–A8**

0	0	0	0	Input, Schmitt trigger
0	0	0	1	Input, Schmitt trigger, pull-up resistor
0	0	1	0	Output, Push-Pull
0	0	1	1	Output, Open-drain
0	1	0	0	Select External memory interface line at A11–A8

P7CONH — Port 7 Control Register(High byte) F8H Set 1, Bank 1

Bit Identifier	.7	.6	.5	.4	.3	.2	.1	.0
RESET Value	0	0	0	0	0	0	0	0
Read/Write	R/W	R/W	R/W	R/W	R/W	R/W	R/W	R/W
Addressing Mode	Register addressing mode only							

.7–.6 **Port 7.7**

0	0	Input, Schmitt trigger
0	1	Input, Schmitt trigger, Pull-up resistor
1	0	Output, Push-pull
1	1	Output, Open-drain

.5–.4 **Port 7.6**

0	0	Input, Schmitt trigger
0	1	Input, Schmitt trigger, Pull-up resistor
1	0	Output, Push-pull
1	1	Output, Open-drain

.3–.2 **Port 7.5**

0	0	Input, Schmitt trigger
0	1	Input, Schmitt trigger, Pull-up resistor
1	0	Output, Push-pull
1	1	Output, Open-drain

.1–.0 **Port 7.4**

0	0	Input, Schmitt trigger
0	1	Input, Schmitt trigger, Pull-up resistor
1	0	Output, Push-pull
1	1	Output, Open-drain

P7CONL — Port 7 Control Register(Low byte) F9H Set 1, Bank 1

Bit Identifier	.7	.6	.5	.4	.3	.2	.1	.0
RESET Value	0	0	0	0	0	0	0	0
Read/Write	R/W	R/W	R/W	R/W	R/W	R/W	R/W	R/W
Addressing Mode	Register addressing mode only							

.7–.6 **Port 7.3**

0	0	Input, Schmitt trigger
0	1	Input, Schmitt trigger, Pull-up resistor
1	0	Output, Push-pull
1	1	Output, Open-drain

.5–.4 **Port 7.2**

0	0	Input, Schmitt trigger
0	1	Input, Schmitt trigger, Pull-up resistor
1	0	Output, Push-pull
1	1	Output, Open-drain

.3–.2 **Port 7.1**

0	0	Input, Schmitt trigger
0	1	Input, Schmitt trigger, Pull-up resistor
1	0	Output, Push-pull
1	1	Output, Open-drain

.1–.0 **Port 7.0**

0	0	Input, Schmitt trigger
0	1	Input, Schmitt trigger, Pull-up resistor
1	0	Output, Push-pull
1	1	Output, Open-drain

P8CONH — Port 8 Control Register(High byte) FAH Set 1, Bank 1

Bit Identifier	.7	.6	.5	.4	.3	.2	.1	.0
RESET Value	0	0	0	0	0	0	0	0
Read/Write	R/W	R/W	R/W	R/W	R/W	R/W	R/W	R/W
Addressing Mode	Register addressing mode only							

.7–.6 **Port 8.7**

0	0	Input, Schmitt trigger
0	1	Input, Schmitt trigger, Pull-up resistor
1	0	Output, Push-pull
1	1	Output, Open-drain

.5–.4 **Port 8.6**

0	0	Input, Schmitt trigger
0	1	Input, Schmitt trigger, Pull-up resistor
1	0	Output, Push-pull
1	1	Output, Open-drain

.3–.2 **Port 8.5**

0	0	Input, Schmitt trigger
0	1	Input, Schmitt trigger, Pull-up resistor
1	0	Output, Push-pull
1	1	Output, Open-drain

.1–.0 **Port 8.4**

0	0	Input, Schmitt trigger
0	1	Input, Schmitt trigger, Pull-up resistor
1	0	Output, Push-pull
1	1	Output, Open-drain

P8CONL — Port 8 Control Register(Low byte) FBH Set 1, Bank 1

Bit Identifier	.7	.6	.5	.4	.3	.2	.1	.0
RESET Value	0	0	0	0	0	0	0	0
Read/Write	R/W	R/W	R/W	R/W	R/W	R/W	R/W	R/W
Addressing Mode	Register addressing mode only							

.7–.6 **Port 8.3**

0	0	Input, Schmitt trigger
0	1	Input, Schmitt trigger, Pull-up resistor
1	0	Output, Push-pull
1	1	Output, Open-drain

.5–.4 **Port 8.2**

0	0	Input, Schmitt trigger
0	1	Input, Schmitt trigger, Pull-up resistor
1	0	Output, Push-pull
1	1	Output, Open-drain

.3–.2 **Port 8.1**

0	0	Input, Schmitt trigger
0	1	Input, Schmitt trigger, Pull-up resistor
1	0	Output, Push-pull
1	1	Output, Open-drain

.1–.0 **Port 8.0**

0	0	Input, Schmitt trigger
0	1	Input, Schmitt trigger, Pull-up resistor
1	0	Output, Push-pull
1	1	Output, Open-drain

P9CONH — Port 9 Control Register(High byte) FCH Set 1, Bank 1

Bit Identifier	.7	.6	.5	.4	.3	.2	.1	.0
RESET Value	0	0	0	0	0	0	0	0
Read/Write	R/W	R/W	R/W	R/W	R/W	R/W	R/W	R/W
Addressing Mode	Register addressing mode only							

.7–.6 **Port 9.7**

0	0	Input, Schmitt trigger
0	1	Input, Schmitt trigger, Pull-up resistor
1	0	Output, Push-pull
1	1	Output, Open-drain

.5–.4 **Port 9.6**

0	0	Input, Schmitt trigger
0	1	Input, Schmitt trigger, Pull-up resistor
1	0	Output, Push-pull
1	1	Output, Open-drain

.3–.2 **Port 9.5**

0	0	Input, Schmitt trigger
0	1	Input, Schmitt trigger, Pull-up resistor
1	0	Output, Push-pull
1	1	Output, Open-drain

.1–.0 **Port 9.4**

0	0	Input, Schmitt trigger
0	1	Input, Schmitt trigger, Pull-up resistor
1	0	Output, Push-pull
1	1	Output, Open-drain

P9CONL — Port 9 Control Register(Low byte) FDH Set 1, Bank 1

Bit Identifier	.7	.6	.5	.4	.3	.2	.1	.0
RESET Value	0	0	0	0	0	0	0	0
Read/Write	R/W	R/W	R/W	R/W	R/W	R/W	R/W	R/W
Addressing Mode	Register addressing mode only							

.7–.6 **Port 9.3**

0	0	Input, Schmitt trigger
0	1	Input, Schmitt trigger, Pull-up resistor
1	0	Output, Push-pull
1	1	Output, Open-drain

.5–.4 **Port 9.2**

0	0	Input, Schmitt trigger
0	1	Input, Schmitt trigger, Pull-up resistor
1	0	Output, Push-pull
1	1	Output, Open-drain

.3–.2 **Port 9.1**

0	0	Input, Schmitt trigger
0	1	Input, Schmitt trigger, Pull-up resistor
1	0	Output, Push-pull
1	1	Output, Open-drain

.1–.0 **Port 9.0**

0	0	Input, Schmitt trigger
0	1	Input, Schmitt trigger, Pull-up resistor
1	0	Output, Push-pull
1	1	Output, Open-drain

P10CONH — Port 10 Control Register(High byte) FEH Set 1, Bank 1

Bit Identifier	.7	.6	.5	.4	.3	.2	.1	.0
RESET Value	0	0	0	0	0	0	0	0
Read/Write	R/W	R/W	R/W	R/W	R/W	R/W	R/W	R/W
Addressing Mode	Register addressing mode only							

.7–.6 **Port 10.7**

0	0	Input, Schmitt trigger
0	1	Input, Schmitt trigger, Pull-up resistor
1	0	Output, Push-pull
1	1	Output, Open-drain

.5–.4 **Port 10.6**

0	0	Input, Schmitt trigger
0	1	Input, Schmitt trigger, Pull-up resistor
1	0	Output, Push-pull
1	1	Output, Open-drain

.3–.2 **Port 10.5**

0	0	Input, Schmitt trigger
0	1	Input, Schmitt trigger, Pull-up resistor
1	0	Output, Push-pull
1	1	Output, Open-drain

.1–.0 **Port 10.4**

0	0	Input, Schmitt trigger
0	1	Input, Schmitt trigger, Pull-up resistor
1	0	Output, Push-pull
1	1	Output, Open-drain

P10CONL — Port 10 Control Register(Low byte) FFH Set 1, Bank 1

Bit Identifier	.7	.6	.5	.4	.3	.2	.1	.0
RESET Value	0	0	0	0	0	0	0	0
Read/Write	R/W	R/W	R/W	R/W	R/W	R/W	R/W	R/W
Addressing Mode	Register addressing mode only							

.7–.6 **Port 10.3**

0	0	Input, Schmitt trigger
0	1	Input, Schmitt trigger, Pull-up resistor
1	0	Output, Push-pull
1	1	Output, Open-drain

.5–.4 **Port 10.2**

0	0	Input, Schmitt trigger
0	1	Input, Schmitt trigger, Pull-up resistor
1	0	Output, Push-pull
1	1	Output, Open-drain

.3–.2 **Port 10.1**

0	0	Input, Schmitt trigger
0	1	Input, Schmitt trigger, Pull-up resistor
1	0	Output, Push-pull
1	1	Output, Open-drain

.1–.0 **Port 10.0**

0	0	Input, Schmitt trigger
0	1	Input, Schmitt trigger, Pull-up resistor
1	0	Output, Push-pull
1	1	Output, Open-drain

PP — Register Page Pointer DFH Set 1

Bit Identifier	.7	.6	.5	.4	.3	.2	.1	.0
RESET Value	0	0	0	0	0	0	0	0
Read/Write	R/W	R/W	R/W	R/W	R/W	R/W	R/W	R/W
Addressing Mode	Register addressing mode only							

.7–.4 Destination Register Page Selection Bits

0	0	0	0	Destination: page 0
0	0	0	1	Destination: page 1
0	0	1	0	Destination: page 2
0	0	1	1	Destination: page 3
0	1	0	0	Destination: page 4
• • •				• • •
1	1	1	1	Destination: page F

.3–.0 Source Register Page Selection Bit

0	0	0	0	Source: page 0
0	0	0	1	Source: page 1
0	0	1	0	Source: page 2
0	0	1	1	Source: page 3
0	1	0	0	Source: page 4
• • •				• • •
1	1	1	1	Source: page F

RP0 — Register Pointer 0 D6H Set 1

Bit Identifier	.7	.6	.5	.4	.3	.2	.1	.0
RESET Value	1	1	0	0	0	–	–	–
Read/Write	R/W	R/W	R/W	R/W	R/W	–	–	–
Addressing Mode	Register addressing only							

.7–.3 Register Pointer 0 Address Value

Register pointer 0 can independently point to one of the 24 8-byte working register areas in the register file. Using the register pointers RP0 and RP1, you can select two 8-byte register slices at one time as active working register space. After a reset, RP0 points to address C0H in register set 1, selecting the 8-byte working register slice C0H–C7H.

.2–.0 Not used for S3C852B/P852B

RP1 — Register Pointer 1 D7H Set 1

Bit Identifier	.7	.6	.5	.4	.3	.2	.1	.0
RESET Value	1	1	0	0	1	–	–	–
Read/Write	R/W	R/W	R/W	R/W	R/W	–	–	–
Addressing Mode	Register addressing only							

.7–.3 Register Pointer 1 Address Value

Register pointer 1 can independently point to one of the 24 8-byte working register areas in the register file. Using the register pointers RP0 and RP1, you can select two 8-byte register slices at one time as active working register space. After a reset, RP1 points to address C8H in register set 1, selecting the 8-byte working register slice C8H–CFH.

.2–.0 Not used for S3C852B/P852B

SIOCON — SIO Control Register EBH Set 1, Bank 1

Bit Identifier	.7	.6	.5	.4	.3	.2	.1	.0
RESET Value	0	0	0	0	0	0	0	0
Read/Write	R/W	R/W	R/W	R/W	R/W	R/W	R/W	R/W
Addressing Mode	Register addressing mode only							

.7 SIO Shift Clock Selection Bit

0	Internal clock (P.S clock)
1	External clock (SCK)

.6 Data Direction Control Bit

0	MSB first mode
1	LSB first mode

.5 SIO Mode Selection Bit

0	Receive only mode
1	Transmit/receive mode

.4 Shift Start Edge Selection Bit

0	Tx at falling edges, Rx at rising edges
1	Tx at rising edges, Rx at falling edges

.3 SIO Counter Clear and Shift Start Bit

0	No action
1	Clear 3-bit counter and start shifting

.2 SIO Shift Operation Enable Bit

0	Disable shifter and clock counter
1	Enable shifter and clock counter

.1 SIO Interrupt Enable Bit

0	Disable SIO interrupt
1	Enable SIO interrupt

.0 SIO Interrupt Pending Bit

0	No interrupt pending
0	*Clear pending condition (when write)*
1	Interrupt is pending

SIOPS — SIO Prescaler Register ECH Set 1, Bank 1

Bit Identifier	.7	.6	.5	.4	.3	.2	.1	.0
RESET Value	0	0	0	0	0	0	0	0
Read/Write	R/W	R/W	R/W	R/W	R/W	R/W	R/W	R/W
Addressing Mode	Register addressing mode only							

.7–.0	Baud rate = Input clock (fxx)/[(SIOPS + 1) ×4] or SCLK input clock

SPH — Stack Pointer (High Byte) D8H Set 1

Bit Identifier	.7	.6	.5	.4	.3	.2	.1	.0
RESET Value	x	x	x	x	x	x	x	x
Read/Write	R/W	R/W	R/W	R/W	R/W	R/W	R/W	R/W
Addressing Mode	Register addressing mode only							

.7–.0 Stack Pointer Address (High Byte)

The high-byte stack pointer value is the upper eight bits of the 16-bit stack pointer address (SP15–SP8). The lower byte of the stack pointer value is located in register SPL (D9H). The SP value is undefined following a reset.

NOTE: If you only use the internal register file as stack area, SPH can serve as a general-purpose register. To avoid possible overflows or under flows of the SPL register by operations that increment or decrement the stack, we recommend that you initialize SPL with the value 'FFH' instead of '00H'. If you use external memory as stack area, the stack pointer requires a full 16-bit address.

SPL — Stack Pointer (Low Byte) D9H Set 1

Bit Identifier	.7	.6	.5	.4	.3	.2	.1	.0
RESET Value	x	x	x	x	x	x	x	x
Read/Write	R/W	R/W	R/W	R/W	R/W	R/W	R/W	R/W
Addressing Mode	Register addressing mode only							

.7–.0 Stack Pointer Address (Low Byte)

The low-byte stack pointer value is the lower eight bits of the 16-bit stack pointer address (SP7–SP0). The upper byte of the stack pointer value is located in register SPH (D8H). The SP value is undefined following a reset.

STPCON — Stop Control Register FBH Set 1, Bank 0

Bit Identifier	.7	.6	.5	.4	.3	.2	.1	.0
RESET Value	0	0	0	0	0	0	0	0
Read/Write	R/W	R/W	R/W	R/W	R/W	R/W	R/W	R/W
Addressing Mode	Register addressing mode only							

.7–.0 Stop control bits

00000000	Disable STOP instruction
10100101	Enable STOP instruction

SYM — System Mode Register DEH Set 1

Bit Identifier	.7	.6	.5	.4	.3	.2	.1	.0
RESET Value	0	–	–	x	x	x	0	0
Read/Write	R/W	–	–	R/W	R/W	R/W	R/W	R/W
Addressing Mode	Register addressing mode only							

.7 Tri-State External Interface Control Bit

0	Normal operation (disable tri-state operation)
1	Set external interface lines to high impedance (enable tri-state operation)

.6 and .5

Not used for S3C852B/P852B

.4–.2 Fast Interrupt Level Selection Bits

0	0	0	IRQ0 (timer 0 overflow/match and capture)
0	0	1	IRQ1 (timer A match, Timer B overflow/match)
0	1	0	IRQ2 (Caller ID functions)
0	1	1	IRQ3 (Watch Timer overflow)
1	0	0	IRQ4 (Serial data receive/transmit Interrupt)
1	0	1	Not used for S3C852B/P852B
1	1	0	IRQ6 (INT0–INT3)
1	1	1	IRQ7 (INT4–INT7)

.1 Fast Interrupt Enable Bit

0	Disable fast interrupt processing
1	Enable fast interrupt processing

.0 Global Interrupt Enable Bit (note)

0	Disable global interrupt processing
1	Enable global interrupt processing

NOTE: Following a reset, you enable global interrupt processing by executing an EI instruction (not by writing a "1" to SYM.0).

T0CON — Timer A Control Register D2H Set 1

Bit Identifier	.7	.6	.5	.4	.3	.2	.1	.0
RESET Value	0	0	0	0	0	0	0	0
Read/Write	R/W	R/W	R/W	R/W	R/W	R/W	R/W	R/W
Addressing Mode	Register addressing mode only							

.7–.6 **Timer 0 Input Clock Selection Bits**

0	0	fxx/1024
0	1	fxx/256
1	0	fxx/64
1	1	External clock (P0.2/T0CK)

.5 - .4 **Timer 0 operating mode selection bits**

0	0	Interval mode (P0.3/T0)
0	1	Capture mode (capture on rising edge, counter running, OVF can occur)
1	0	Capture mode (capture on falling edge, counter running, OVF can occur)
1	1	PWM mode (OVF interrupt can occur)

.3 **Timer 0 counter clear bit**

0	No effect
1	Clear the timer 0 counter (when write)

.2 **Timer 0 overflow interrupt enable bit**

0	Disable interrupt
1	Enable interrupt

.1 **Timer 0 match/capture interrupt enable bit**

0	Disable interrupt
1	Enable interrupt

.0 **Timer 0 match/capture interrupt pending bit**

0	No interrupt pending
0	*Clear pending bit (write)*
1	Interrupt is pending

TACON — Timer A Control Register E4H Set 1, Bank 1

Bit Identifier	.7	.6	.5	.4	.3	.2	.1	.0
RESET Value	0	0	0	0	0	0	0	0
Read/Write	R/W	R/W	R/W	R/W	R/W	R/W	R/W	R/W
Addressing Mode	Register addressing mode only							

.7 One 16-bit timer or Two 8-bit timers mode selection bit

0	Two 8-bit timers mode (Timer A/Timer B)
1	One 16-bit timer mode (Timer 1)

.6–.4 Timer A clock selection bits

0	0	0	fxx/1024
0	0	1	fxx/512
0	1	0	fxx/8
0	1	1	fxx
1	x	x	T1CK (external clock)

('x' means don't care.)

.3 Timer A Counter Clear Bit

0	No effect
1	Clear the timer A counter (when write)

.2 Timer A Count Enable Bit

0	Disable count operation
1	Enable count operation

.1 Timer A Interrupt Enable Bit

0	Disable interrupt
1	Enable interrupt

.0 Timer A Interrupt Pending Bit

0	No interrupt pending
0	*Clear pending bit (when write)*
1	Interrupt is pending

TBCON — Timer B Control Register E5H Set 1, Bank 1

Bit Identifier	.7	.6	.5	.4	.3	.2	.1	.0
RESET Value	0	0	0	0	0	0	0	0
Read/Write	R/W	R/W	R/W	R/W	R/W	R/W	R/W	R/W
Addressing Mode	Register addressing mode only							

.7–.6 Timer B operating mode selection bits

0	0	Interval mode
0	1	6-bit PWM mode (OVF interrupt can occur)
1	0	7-bit PWM mode (OVF interrupt can occur)
1	1	8-bit PWM mode (OVF interrupt can occur)

.5–.4 Timer B clock selection bits

0	0	fxx/8
0	1	fxx/4
1	0	fxx/2
1	1	fxx

.3 Timer B Counter Clear Bit

0	No effect
1	Clear the timer B counter (when write)

.2 Timer B Count Enable Bit

0	Disable count operation
1	Enable count operation

.1 Timer B match Interrupt Enable Bit

0	Disable interrupt
1	Enable interrupt

.0 Timer B overflow interrupt enable bit

0	Disable interrupt
1	Enable interrupt

WTCON — Watch Timer Control Register E6H Set 1, Bank 1

Bit Identifier	.7	.6	.5	.4	.3	.2	.1	.0
RESET Value	0	0	0	0	0	0	0	0
Read/Write	R/W	R/W	R/W	R/W	R/W	R/W	R/W	R/W
Addressing Mode	Register addressing mode only							

.7 Watch Timer clock selection bit

0	Main clock divide by 2^7 (fx/128)
1	Sub clock (fxt)

.6 Watch Timer INT Enable/Disable bit

0	Disable watch timer interrupt
1	Enable watch timer interrupt

.5–.4 Buzzer signal selection bits

0	0	2 kHz
0	1	4 kHz
1	0	8 kHz
1	1	16 kHz

.3–.2 Watch Timer speed selection bits

0	0	Set watch timer interrupt to 1 s
0	1	Set watch timer interrupt to 0.5 s
1	0	Set watch timer interrupt to 0.25 s
1	1	Set watch timer interrupt to 3.91ms

NOTE: The above values of watch timer interrupt are accurate when fw = fxt.

.1 Watch Timer Enable/Disable bit

0	Disable watch timer; clear frequency dividing circuits
1	Enable watch timer

.0 Watch Timer interrupt pending bit

0	Watch Timer Interrupt request is not pending
1	Watch Timer Interrupt request is pending

NOTES

5 INTERRUPT STRUCTURE

OVERVIEW

The SAM8 interrupt structure has three basic components: levels, vectors, and sources. The CPU recognizes eight interrupt levels and supports up to 128 interrupt vectors. When a specific interrupt level has more than one vector address, the vector priorities are established in hardware. Each vector can have one or more sources.

Levels

Interrupt levels are the main unit for interrupt priority assignment and recognition. All peripherals and I/O blocks can issue interrupt requests. In other words, peripheral and I/O operations are interrupt-driven. There are eight interrupt levels: IRQ0–IRQ7, also called level 0-level 7. Each interrupt level directly corresponds to an interrupt request number (IRQn). The total number of interrupt levels used in the interrupt structure varies from device to device. The S3C852B/P852B interrupt structure recognizes eight interrupt levels, IRQ0–IRQ7.

The interrupt level numbers 0 through 7 do not necessarily indicate the relative priority of the levels. They are simply identifiers for the interrupt levels that are recognized by the CPU. The relative priority of different interrupt levels is determined by settings in the interrupt priority register, IPR. Interrupt group and subgroup logic controlled by IPR settings lets you define more complex priority relationships between different levels.

Vectors

Each interrupt level can have one or more interrupt vectors, or it may have no vector address assigned at all. The maximum number of vectors that can be supported for a given level is 128. (The actual number of vectors used for TCC12X-series devices will always be much smaller.) If an interrupt level has more than one vector address, the vector priorities are set in hardware. S3C852B/P852B have eighteen vectors— corresponding to each of the eighteen possible interrupt sources.

Sources

A source is any peripheral that generates an interrupt. A source can be an external pin or a counter overflow, for example. Each vector can have several interrupt sources. In the S3C852B/P852B interrupt structure, each source has its own vector address.

When a service routine starts, the respective pending bit is either cleared automatically by hardware cleared "manually" by program software. The characteristics of the source's pending mechanism determine which method is used to clear its respective pending bit.

INTERRUPT TYPES

The three components of the SAM8 interrupt structure described above (levels, vectors, and sources) are combined to determine the interrupt structure of an individual device and to make full use of its available interrupt logic. There are three possible combinations of interrupt structure components, called interrupt types 1, 2, and 3. The types differ in the number of vectors and interrupt sources assigned to each level (see Figure 5-1):

Type 1: One level (IRQn) + one vector (V_1) + one source (S_1)

Type 2: One level (IRQn) + one vector (V_1) + multiple sources (S_1–S_n)

Type 3: One level (IRQn) + multiple vectors (V_1–V_n) + multiple sources (S_1–S_n, S_{n+1}–S_{n+m})

In the S3C852B/P852B microcontrollers, only interrupt types 1 and 3 are implemented.

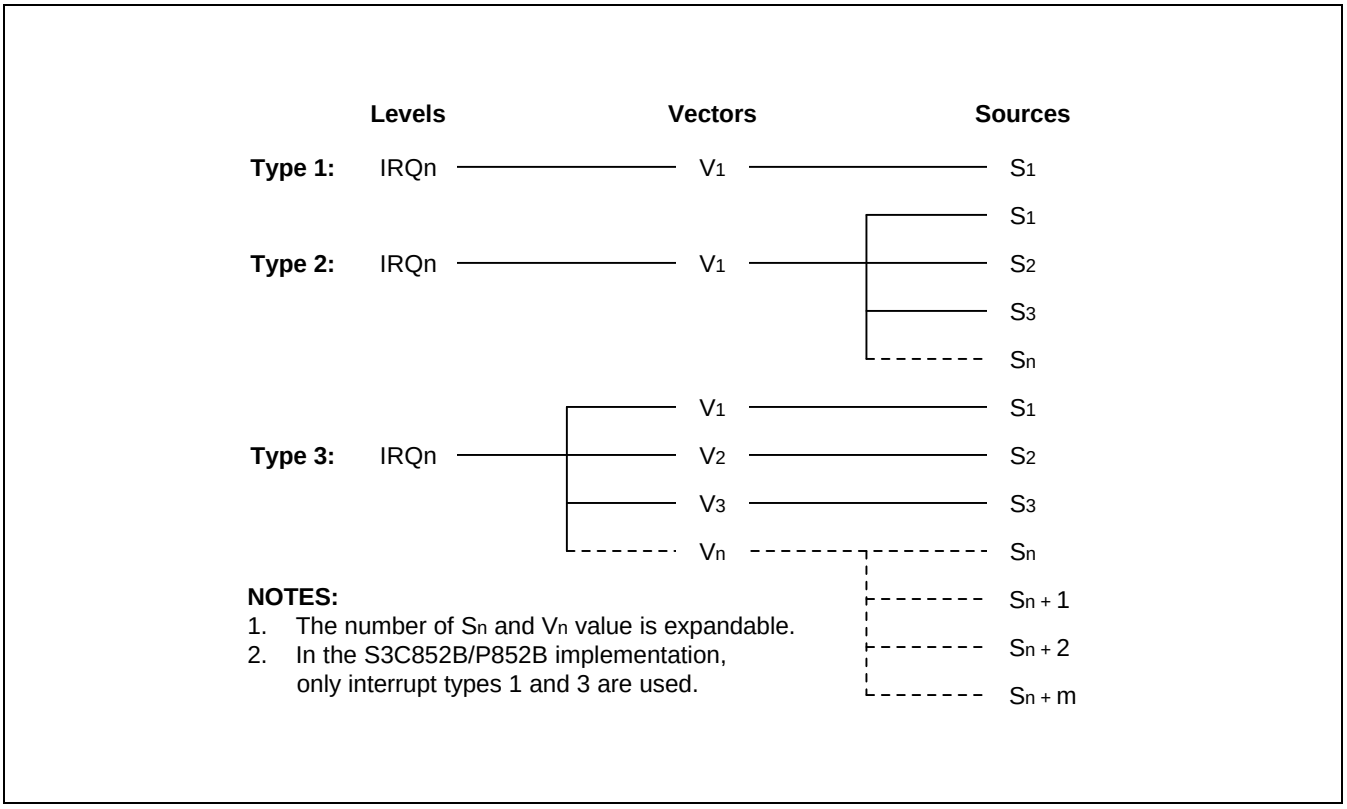

Figure 5-1. SAM8-Series Interrupt Types

S3C852B/P852B INTERRUPT STRUCTURE

The S3C852B/P852B microcontroller supports eighteen interrupt sources. Each interrupt source has a corresponding interrupt vector address. seventh interrupt levels are used in the device-specific interrupt structure, which is shown in Figure 5-2.

When multiple interrupt levels are active, the interrupt priority register (IPR) determines the order in which contending interrupts are to be serviced. If multiple interrupts occur within the same interrupt level, the interrupt with the lowest vector address is usually processed first.

When the CPU grants an interrupt request, interrupt processing starts: All other interrupts are disabled and the program counter value and status flags are pushed to stack. The starting address of the service routine is fetched from the appropriate vector address (plus the next 8-bit value to concatenate the full 16-bit address) and the service routine is executed.

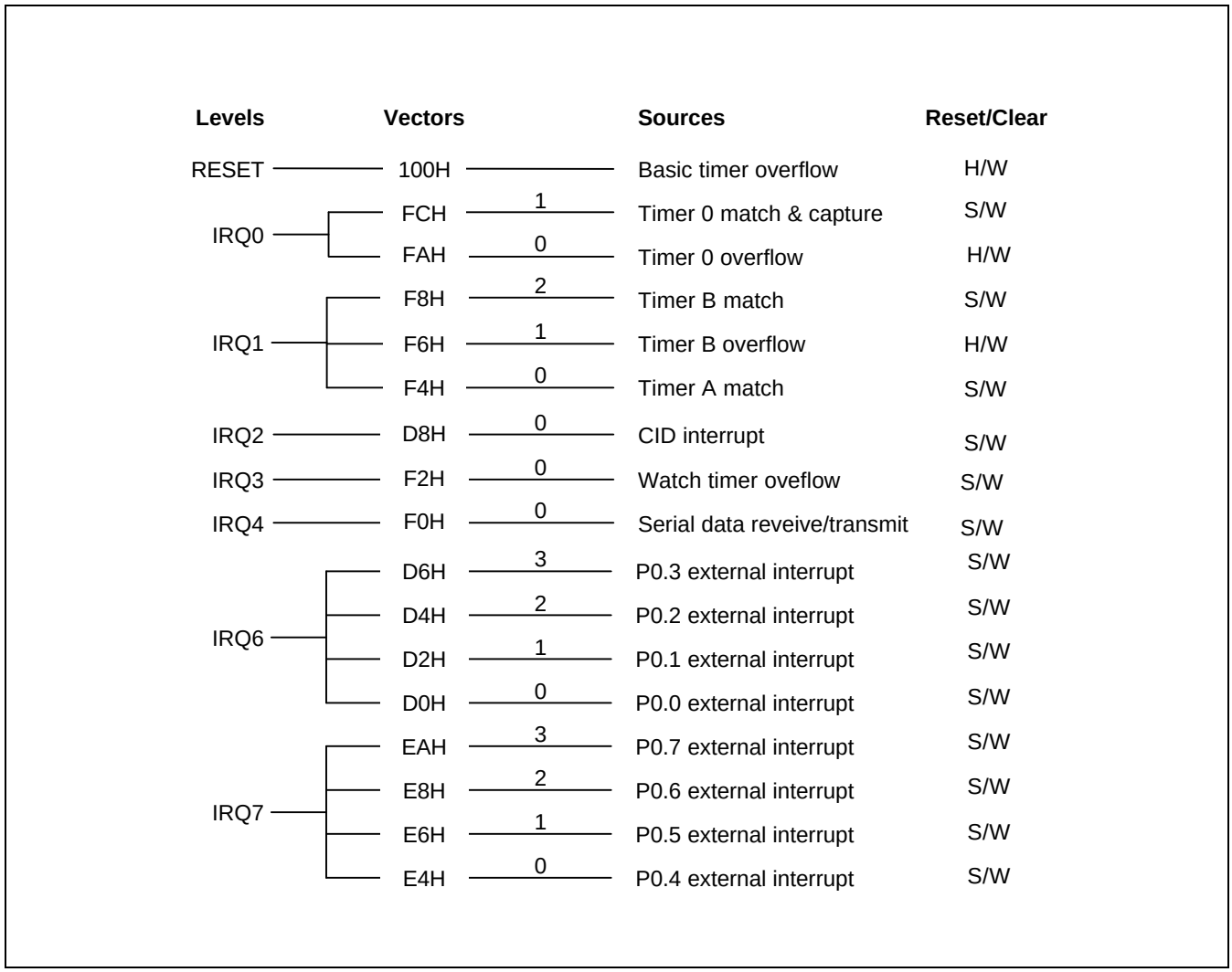

Figure 5-2. S3C852B Interrupt Structure

INTERRUPT VECTOR ADDRESSES

Interrupt vector addresses for the S3C852B/P852B are stored in the first 256 bytes of the program memory (ROM). Vectors for all interrupt levels are stored in the vector address area, 0H–FFH.

Unused locations in this range can be used as normal program memory. When writing an application program, you should be careful not to overwrite the address data stored in this area.

The program reset address in the program memory is 0100H.

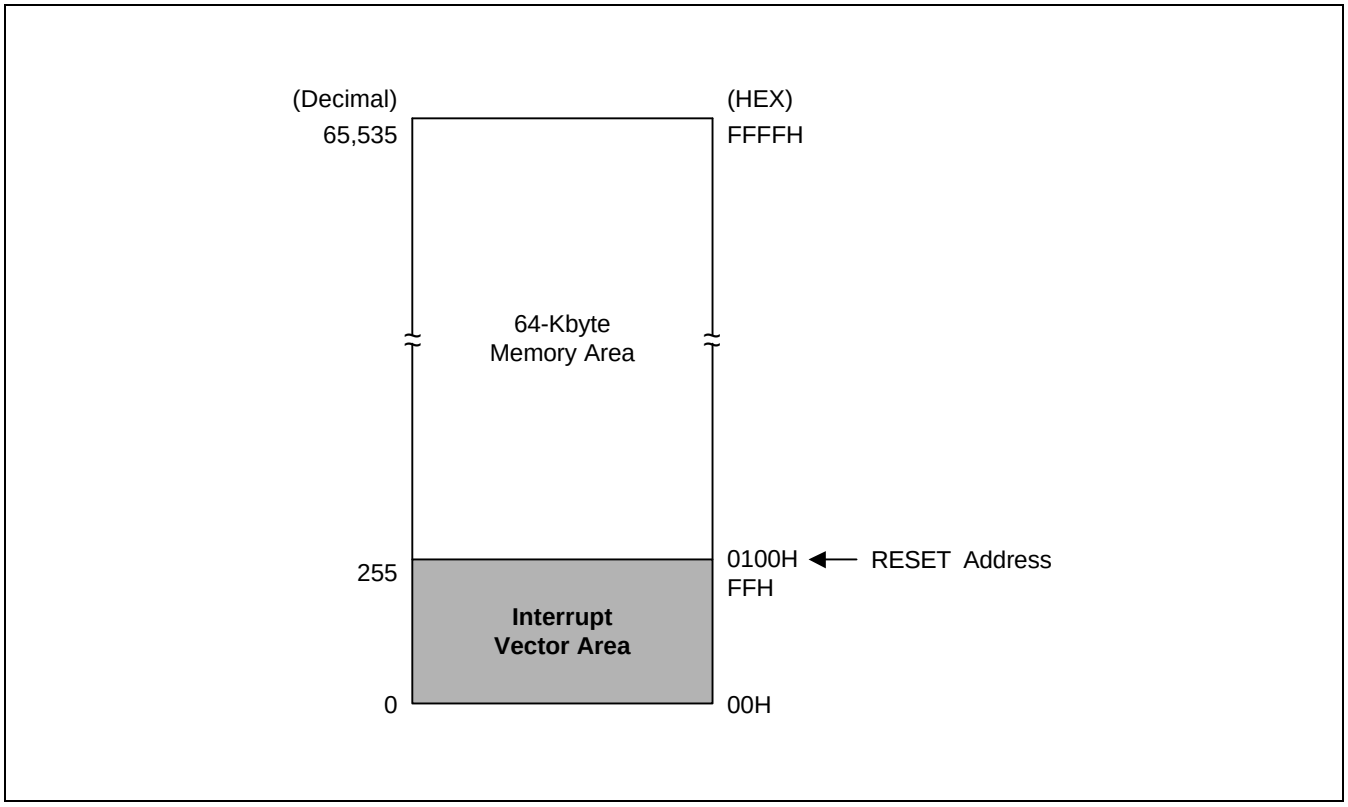

Figure 5-3. Vector Address Area in Program Memory (ROM)

Table 5-1. S3C852B/P852B Interrupt Vectors

Vector Address		Interrupt Source	Request		Reset/Clear	
Decimal Value	Hex Value		Interrupt Level	Priority in Level	H/W	S/W
208	D0H	P0.0 External Interrupt(edge trigger)	IRQ6	0		√
210	D2H	P0.1 External Interrupt(edge trigger)		1		
212	D4H	P0.2 External Interrupt(edge trigger)		2		
214	D6H	P0.3 External Interrupt(edge trigger)		3		
216	D8H	CID interrupt	IRQ2	2		√
228	E4H	P0.4 External Interrupt(edge trigger)	IRQ7	0		√
230	E6H	P0.5 External Interrupt(edge trigger)		1		
232	E8H	P0.6 External Interrupt(edge trigger)		2		
234	EAH	P0.7 External Interrupt(edge trigger)		3		
240	F0H	Serial data receive/transmit	IRQ4	-		√
242	F2H	Watch Timer overflow	IRQ3	-		√
244	F4H	Timer A match	IRQ1	0		√
246	F6H	Timer B overflow		1	√	
248	F8H	Timer B match		2		√
250	FAH	Timer 0 overflow	IRQ0	0	√	
252	FCH	Timer 0 match & capture		1		√
256	100H	Basic Timer overflow	-	-	√	

NOTES:

1. Interrupt priorities are identified in inverse order: '0' is highest priority, '1' is the next highest, and so on.
2. If two or more interrupts within the same level contend, the interrupt with the lowest vector address has priority over one with a higher vector address. These priorities within levels are preset at the factory.

ENABLE/DISABLE INTERRUPT INSTRUCTIONS (EI, DI)

Executing the Enable Interrupts (EI) instruction enables the interrupt structure. All interrupts are then serviced as they occur, and according to the established priorities.

NOTE

The system initialization routine that is executed following a reset must always contain an EI instruction (assuming one or more interrupts are used in the application).

During normal operation, you can execute the DI (Disable Interrupt) instruction at any time to globally disable interrupt processing. The EI and DI instructions change the value of bit 0 in the SYM register. Although you can manipulate SYM.0 directly to enable or disable interrupts, we recommend that you use the EI and DI instructions instead.

SYSTEM-LEVEL INTERRUPT CONTROL REGISTERS

In addition to the control registers for specific interrupt sources, four system-level registers control interrupt processing:

— The interrupt mask register, IMR, enables (un-masks) or disables (masks) interrupt levels.

— The interrupt priority register, IPR, controls the relative priorities of interrupt levels.

— The interrupt request register, IRQ, contains interrupt pending flags for each interrupt level (as opposed to each interrupt source).

— The system mode register, SYM, enables or disables global interrupt processing. (SYM settings also enable fast interrupts and control the activity of external interface, if implemented.)

Table 5-2. Interrupt Control Register Overview

Control Register	ID	R/W	Function Description
Interrupt mask register	IMR	R/W	Bit settings in the IMR register enable or disable interrupt processing for each of the seven interrupt levels, IRQ0–IRQ7.
Interrupt priority register	IPR	R/W	Controls the relative processing priorities of the interrupt levels. The eight levels of the S3C852B/P852B are organized into three groups: A, B, and C. Group A is IRQ0 and IRQ1, group B is IRQ2–IRQ4, and group C is IRQ6–IRQ7
Interrupt request register	IRQ	R	This register contains a request pending bit for each of the seven interrupt levels, IRQ0–RQ7.
System mode register	SYM	R/W	Dynamic global interrupt processing enable and disable, fast interrupt processing.

NOTE

DI instruction must be used before changing the IMR, interrupt pending register and interrupt source control register. If IMR, interrupt pending register or source control register is controlled in EI status, program control could be in uncontrollable state.

INTERRUPT PROCESSING CONTROL POINTS

Interrupt processing can therefore be controlled in two ways: globally or by specific interrupt level and source. The system-level control points in the interrupt structure are, therefore:

— Global interrupt enable and disable (by EI and DI instructions or by direct manipulation of SYM.0)

— Interrupt level enable/disable settings (IMR register)

— Interrupt level priority settings (IPR register)

— Interrupt source enable/disable settings in the corresponding peripheral control registers

NOTE

When writing the part of your application program that handles interrupt processing, be sure to include the necessary register file address (register pointer) information.

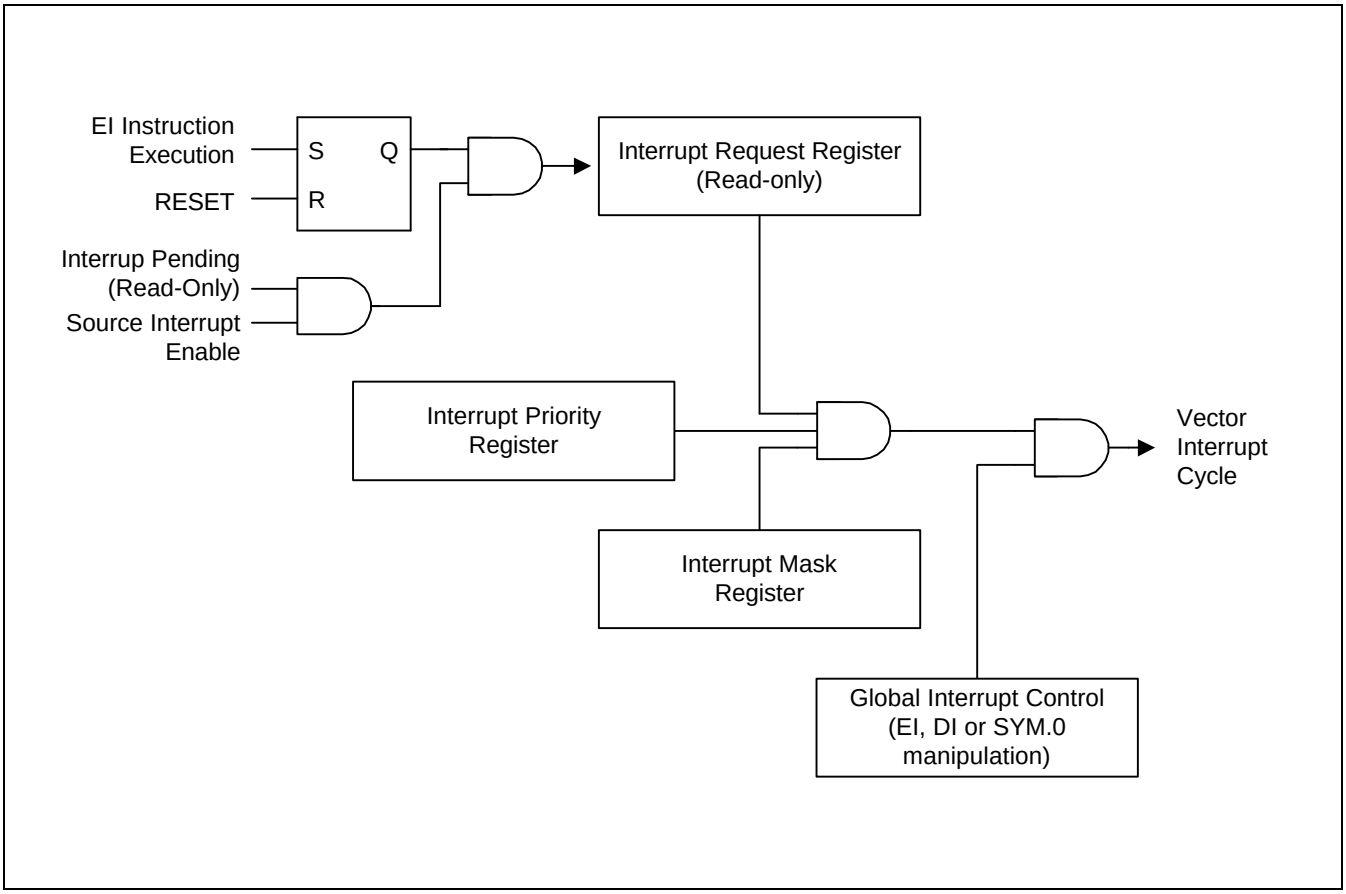

Figure 5-4. Interrupt Function Diagram

SYSTEM MODE REGISTER (SYM)

The system mode register, SYM (set 1, DEH), is used to globally enable and disable interrupt processing and to control fast interrupt processing. Figure 5-5 shows the effect of the various control settings.

A reset clears SYM.7, SYM.1, and SYM.0 to "0" and the other SYM bit values (for fast interrupt level selection) are undetermined.

The instructions EI and DI enable and disable global interrupt processing, respectively, by modifying the bit 0 value of the SYM register. An Enable Interrupt (EI) instruction must be included in the initialization routine, which follows a reset operation, in order to enable interrupt processing. Although you can manipulate SYM.0 directly to enable and disable interrupts during normal operation, we recommend using the EI and DI instructions for this purpose.

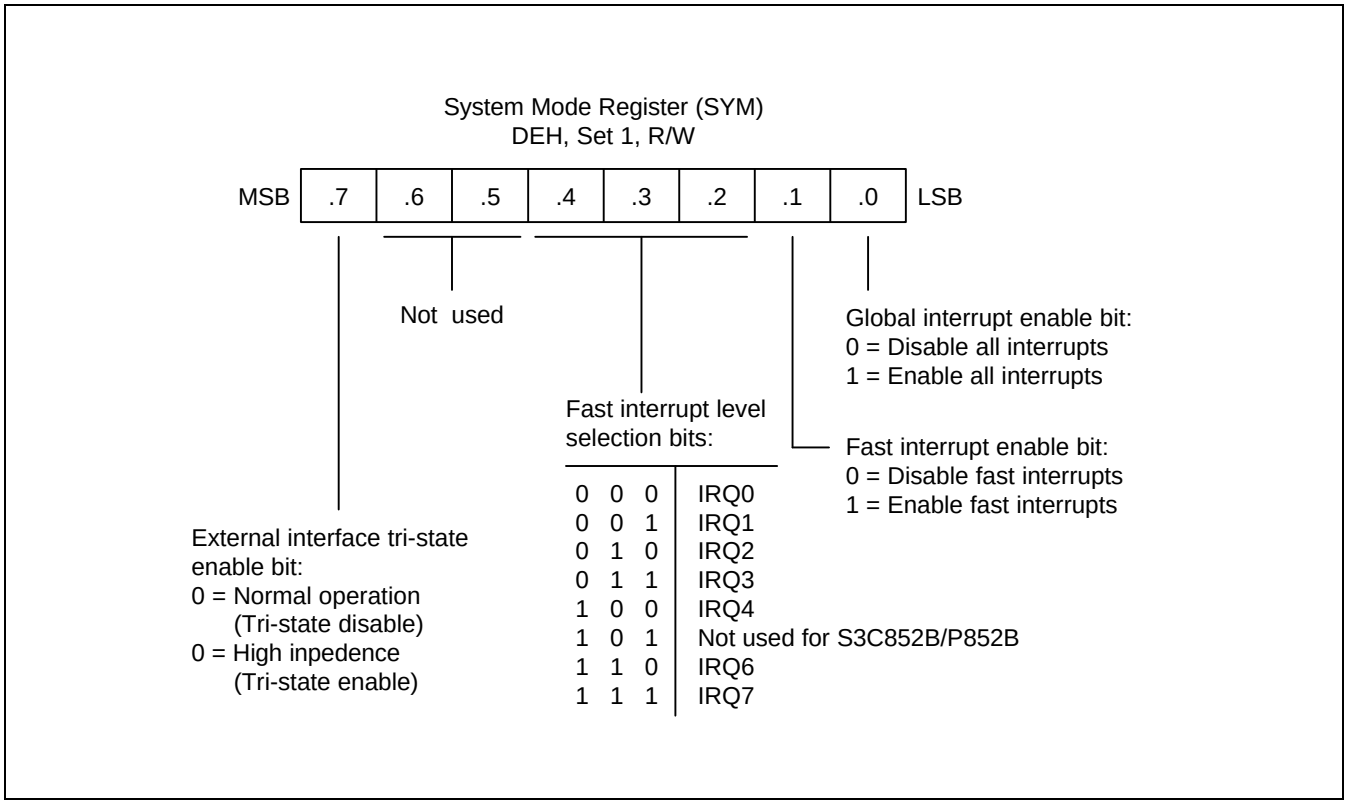

Figure 5-5. System Mode Register (SYM)

INTERRUPT MASK REGISTER (IMR)

The interrupt mask register, IMR (set 1, DDH) is used to enable or disable interrupt processing for individual interrupt levels. After a reset, all IMR bit values are undetermined and must therefore be written to their required settings by the initialization routine.

Each IMR bit corresponds to a specific interrupt level: bit 1 to IRQ1, bit 2 to IRQ2, and so on. When the IMR bit of an interrupt level is cleared to "0", interrupt processing for that level is disabled (masked). When you set a level's IMR bit to "1", interrupt processing for the level is enabled (not masked).

The IMR register is mapped to register location DDH in set 1. Bit values can be read and written by instructions using the Register addressing mode.

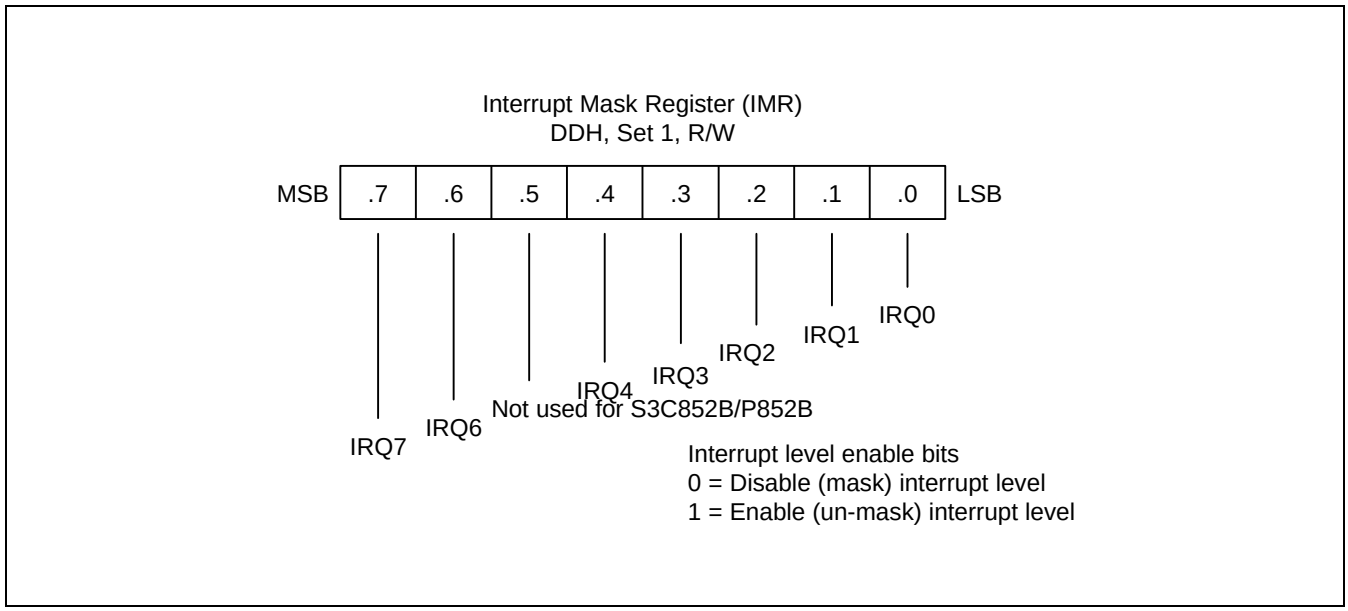

Figure 5-6. Interrupt Mask Register (IMR)

NOTE

Before IMR register is changed to any value, all interrupts must be disable. Using DI instruction is recommended.

INTERRUPT PRIORITY REGISTER (IPR)

The interrupt priority register, IPR (set 1, bank 0, FFH), is used to set the relative priorities of the interrupt levels used in the microcontroller's interrupt structure. After a reset, all IPR bit values are undetermined and must therefore be written to their required settings by the initialization routine.

When more than one interrupt source is active, the source with the highest priority level is serviced first. If both sources belong to the same interrupt level, the source with the lowest vector address usually has priority. (This priority is fixed in hardware.)

To support programming of the relative interrupt level priorities, they are organized into groups and subgroups by the interrupt logic. Please note that these groups (and subgroups) are used only by IPR logic for the IPR register priority definitions (see Figure 5-7):

Group A IRQ0, IRQ1

Group B IRQ2, IRQ3, IRQ4

Group C IRQ6, IRQ7

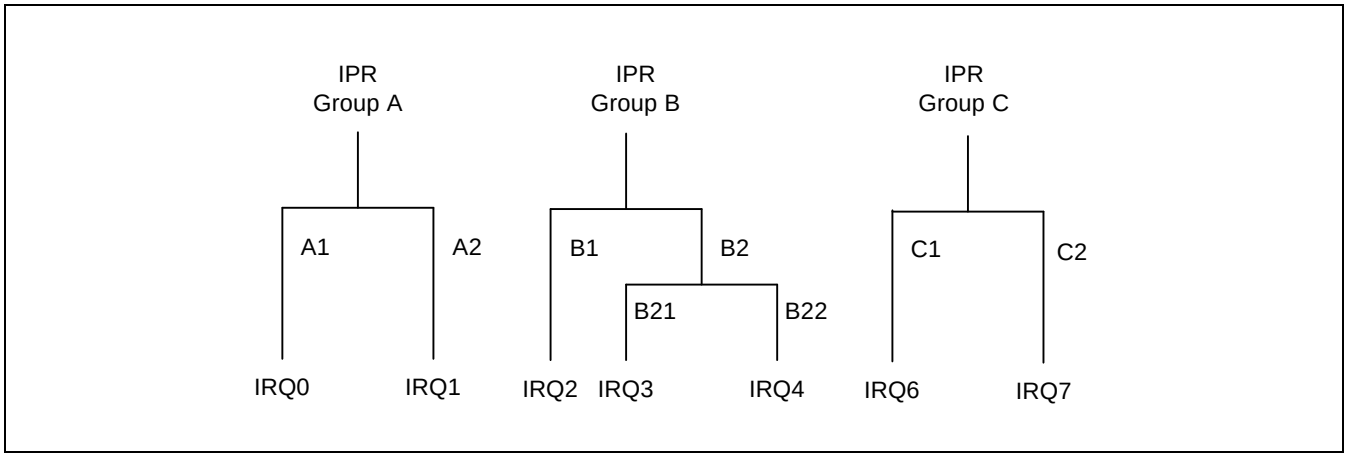

Figure 5-7. Interrupt Request Priority Groups

As you can see in Figure 5-8, IPR.7, IPR.4, and IPR.1 control the relative priority of interrupt groups A, B, and C. For example, the setting '001B' for these bits would select the group relationship B > C > A; the setting '101B' would select the relationship C > B > A.

The functions of the other IPR bit settings are as follows:

— IPR.6 controls the relative priorities of group C interrupts.

— Interrupt group B has a subgroup to provide an additional priority relationship between for interrupt levels 2, 3, and 4. IPR.2 defines the possible subgroup B relationships.

— IPR.3 controls the relative priorities setting of IRQ3 and IRQ4 interrupts.

— IPR.0 controls the relative priority setting of IRQ0 and IRQ1 interrupts.

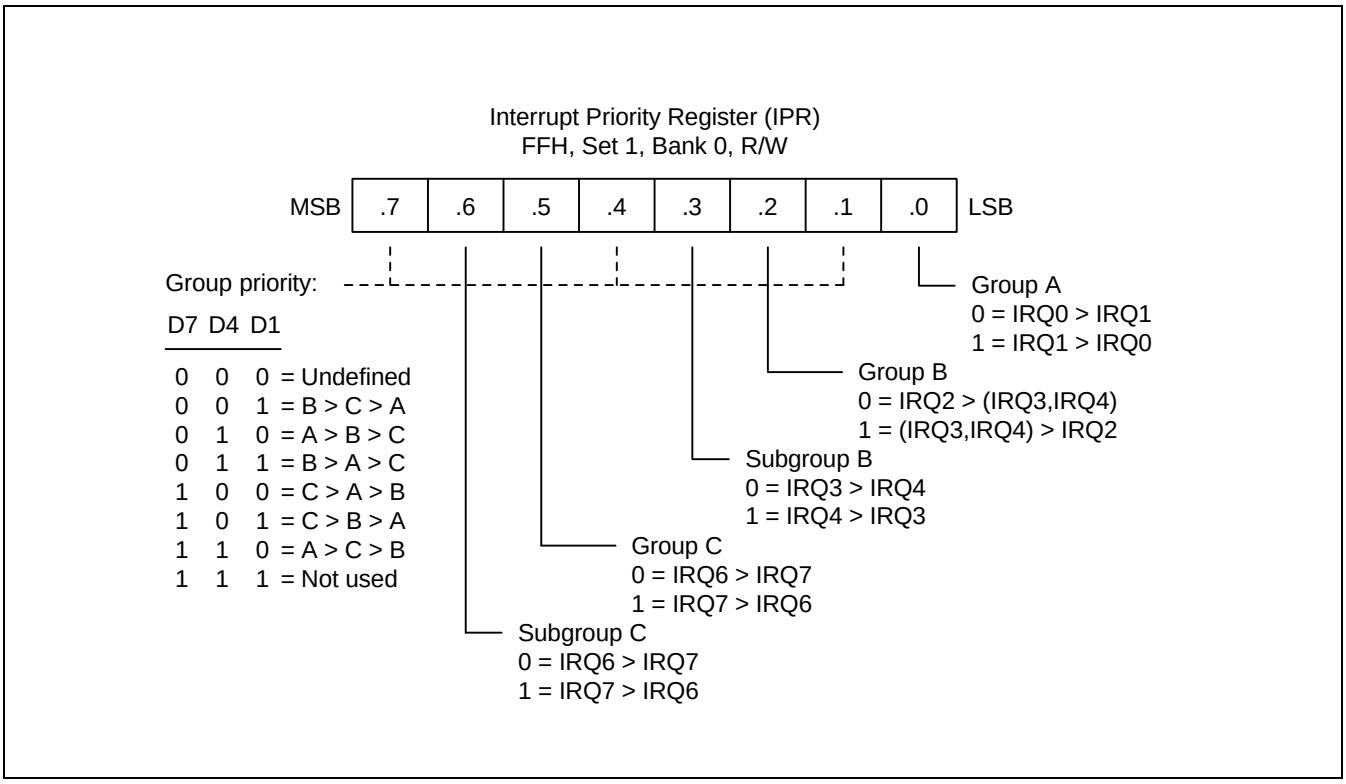

Figure 5-8. Interrupt Priority Register (IPR)

INTERRUPT REQUEST REGISTER (IRQ)

You can poll bit values in the interrupt request register, IRQ (set 1, DCH), to monitor interrupt request status for all levels in the microcontroller' interrupt structure. Each bit corresponds to the interrupt level of the same number: bit 0 to IRQ0, bit 1 to IRQ1, and so on. A "0" indicates that no interrupt request is currently being issued for that level; a "1" indicates that an interrupt request has been generated for that level.

IRQ bit values are read-only addressable using Register addressing mode. You can read (test) the contents of the IRQ register at any time using bit or byte addressing to determine the current interrupt request status of specific interrupt levels. After a reset, all IRQ status bits are cleared to "0".

You can poll IRQ register values even if a DI instruction has been executed (that is, if global interrupt processing is disabled). If an interrupt occurs while the interrupt structure is disabled, the CPU will not service it. You can, however, still detect the interrupt request by polling the IRQ register. In this way, you can determine which events occurred while the interrupt structure was globally disabled.

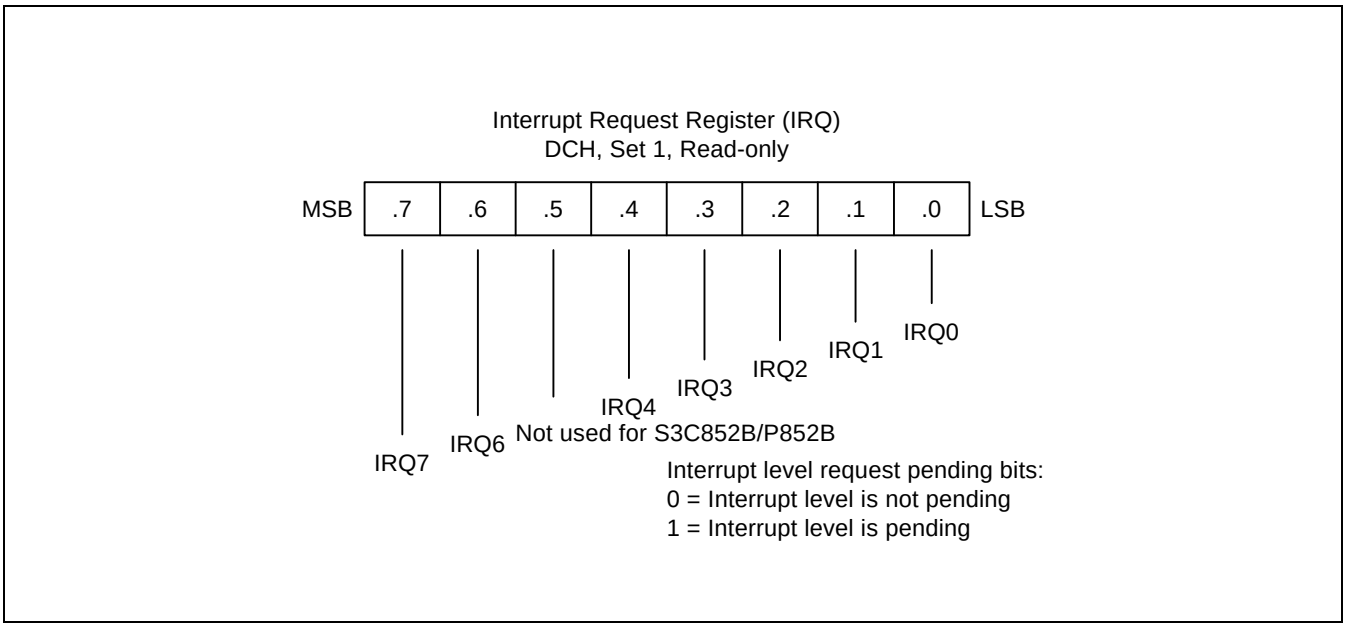

Figure 5-9. Interrupt Request Register (IRQ)

INTERRUPT PENDING FUNCTION TYPES

Overview

There are two types of interrupt pending bits: One type is automatically cleared by hardware after the interrupt service routine is acknowledged and executed; the other type must be cleared by the application program's interrupt service routine.

Pending Bits Cleared Automatically by Hardware

For interrupt pending bits that are cleared automatically by hardware, interrupt logic sets the corresponding pending bit to "1" when a request occurs. It then issues an IRQ pulse to inform the CPU that an interrupt is waiting to be serviced. The CPU acknowledges the interrupt source, executes the service routine, and clears the pending bit to "0". This type of pending bit is mapped and can, therefore, be read or written by application software.

Please refer to the page 5-4 (interrupt structure) to recognize which interrupts belong to this category of interrupts whose pending conditions are cleared automatically by hardware.

Pending Bits Cleared by the Service Routine

The second type of pending bit must be cleared by program software. The service routine must clear the appropriate pending bit before a return-from-interrupt subroutine (IRET) occurs. To do this, a "0" must be written to the corresponding pending bit location in the source or control register.

In the S3C852B/P852B interrupt structure, pending conditions for all external interrupt sources must be cleared by the program software's interrupt service routine.

INTERRUPT SOURCE POLLING SEQUENCE

The interrupt request polling and servicing sequence is as follows:

1. A source generates an interrupt request by setting the interrupt request bit to "1".
2. The CPU polling procedure identifies a pending condition for that source.
3. The CPU checks the source's interrupt level.
4. The CPU generates an interrupt acknowledge signal.
5. Interrupt logic determines the interrupt's vector address.
6. The service routine starts and the source's pending bit is cleared to "0" (by hardware or by software).
7. The CPU continues polling for interrupt requests.

INTERRUPT SERVICE ROUTINES

Before an interrupt request can be serviced, the following conditions must be met:

— Interrupt processing must be globally enabled (EI, SYM.0 = "1")
— The interrupt level must be enabled (IMR register)
— The interrupt level must have the highest priority if more than one level is currently requesting service
— The interrupt must be enabled at the interrupt's source (peripheral control register)

If all of the above conditions are met, the interrupt request is acknowledged at the end of the instruction cycle. The CPU then initiates an interrupt machine cycle that completes the following processing sequence:

1. Reset (clear to "0") the interrupt enable bit in the SYM register (SYM.0) to disable all subsequent interrupts.
2. Save the program counter (PC) and status flags to the system stack.
3. Branch to the interrupt vector to fetch the address of the service routine'.
4. Pass control to the interrupt service routine.

When the interrupt service routine is completed, the CPU issues an Interrupt Return (IRET). The IRET restores the PC and status flags and sets SYM.0 to "1", allowing the CPU to process the next interrupt request.

GENERATING INTERRUPT VECTOR ADDRESSES

The interrupt vector area in the ROM (00H–FFH) contains the addresses of interrupt service routines that correspond to each level in the interrupt structure. Vectored interrupt processing follows this sequence:

1. Push the program counter's low-byte value to the stack.
2. Push the program counter's high-byte value to the stack.
3. Push the FLAG register values to the stack.
4. Fetch the service routine's high-byte address from the vector location.
5. Fetch the service routine's low-byte address from the vector location.
6. Branch to the service routine specified by the concatenated 16-bit vector address.

NOTE

A 16-bit vector address always begins at an even-numbered ROM address within the range 00H - FFH.

NESTING OF VECTORED INTERRUPTS

It is possible to nest a higher-priority interrupt request while a lower-priority request is being serviced. To do this, you must follow these steps:

1. Push the current 8-bit interrupt mask register (IMR) value to the stack (PUSH IMR).
2. Load the IMR register with a new mask value that enables only the higher priority interrupt.
3. Execute an EI instruction to enable interrupt processing (a higher priority interrupt will be processed if it occurs).
4. When the lower-priority interrupt service routine ends, execute DI, and restore the IMR to its original value by returning the previous mask value from the stack (POP IMR).
5. Execute an IRET.

Depending on the application, you may be able to simplify the above procedure to some extent.

INSTRUCTION POINTER (IP)

The instruction pointer (IP) is used by all KS88-series microcontrollers to control the optional high-speed interrupt processing feature called *fast interrupts*. The IP consists of register pair DAH and DBH. The IP register names are IPH (high byte, IP15–IP8) and IPL (low byte, IP7–IP0).

FAST INTERRUPT PROCESSING

The feature called *fast interrupt processing* lets you specify that an interrupt within a given level be completed in approximately six clock cycles instead of the usual 16 clock cycles. SYM.4–SYM.2 are used to select a specific interrupt level for fast processing and SYM.1 enables or disables fast interrupt processing.

Two other system registers support fast interrupt processing:

— The instruction pointer (IP) contains the starting address of the service routine (and is later used to swap the program counter values), and

— When a fast interrupt occurs, the contents of the FLAGS register is stored in an unmapped, dedicated register called FLAGS' (FLAGS prime).

NOTES

1. For the S3C852B/P852B microcontroller's, the service routine for any of the seven interrupt levels can be selected for fast interrupt processing.

2. If you want to use a fast interrupt in multi source interrupt vector, the fast interrupt may not be processed when you use two sources as interrupt vector in normal mode. But it is possible when you use only one source as interrupt vector.

Procedure for Initiating Fast Interrupts

To initiate fast interrupt processing, follow these steps:

1. Load the start address of the service routine into the instruction pointer (IP).
2. Load the interrupt level number (IRQn) into the fast interrupt selection field (SYM.4–SYM.2)
3. Write a "1" to the fast interrupt enable bit in the SYM register.

Fast Interrupt Service Routine

When an interrupt occurs in the level selected for fast interrupt processing, the following events occur:

1. The contents of the instruction pointer and the PC are swapped.
2. The FLAG register values are written to the FLAGS' ("FLAGS prime") register.
3. The fast interrupt status bit in the FLAGS register is set.
4. The interrupt is serviced.
5. Assuming that the fast interrupt status bit is set, when the fast interrupt service routine ends, the instruction pointer and PC values are swapped back.
6. The content of FLAGS' ("FLAGS prime") is copied automatically back to the FLAGS register.
7. The fast interrupt status bit in FLAGS is cleared automatically.

Relationship to Interrupt Pending Bit Types

As described previously, there are two types of interrupt pending bits: One type is automatically cleared by hardware after the interrupt service routine is acknowledged and executed, and the other type must be cleared by the application program's interrupt service routine. You can select fast interrupt processing for interrupts with either type of pending condition clear function — by hardware or by software.

Programming Guidelines

Remember that the only way to enable/disable a fast interrupt is to set/clear the fast interrupt enable bit in the SYM register, SYM.1. Executing an EI or DI instruction globally enables or disables all interrupt processing, including fast interrupts.

NOTE

If you use fast interrupts, remember to load the IP with a new start address when the fast interrupt service routine ends.

☞ PROGRAMMING TIP — Setting Up the S3C852B Interrupt Control Structure

This example shows how to enable interrupts for select interrupt sources, disable interrupt for other sources, and to set interrupt priorities for the S3C852B. The program does the following:

— Enable interrupts for timer 0, serial, and External Interrupt(INT4 – INT7)

— Set interrupt priorities as SIO > timer 0 > External Interrupt(INT4 – INT7)

```
•
•
•
DI                          ;  Disable interrupts
LD      IMR,#91H            ;  IRQ0, IRQ4, IRQ7 are selected
LD      IPR,#12H            ;  IRQ4 > IRQ0 > IRQ7
LD      T0DATA,#0FFH        ;
LD      T0CON,#12H          ;  Timer 0 interrupt enable, Timer 0 pending clear
SB1
LD      SIOCON,#3EH         ;  SIO interrupt enable
LD      SIOPS,#29H          ;  SIO Prescaler setting
LD      P0INT, #0F0H        ;  External Interrupt(INT4 – INT7) enable
•
•
•
EI                          ;  Enable interrupts
```

Assuming interrupt sources and priorities have been set by the above instruction sequence, you could then select interrupt level 0, 2, or 7 for fast interrupt processing. The following instructions enable fast interrupt processing for IRQ7:

```
DI                          ;  Disable interrupts
LDW     IPH,#3000H          ;  Load the service routine address for IRQ7
LD      SYM,#1EH            ;  Enable fast interrupt processing
EI                          ;  Enable interrupts
```

6 INSTRUCTION SET

OVERVIEW

The SAM87RC instruction set is specifically designed to support the large register files that are typical of most SAM87RC microcontrollers. There are 78 instructions. The powerful data manipulation capabilities and features of the instruction set include:

— A full complement of 8-bit arithmetic and logic operations, including multiply and divide

— No special I/O instructions (I/O control/data registers are mapped directly into the register file)

— Decimal adjustment included in binary-coded decimal (BCD) operations

— 16-bit (word) data can be incremented and decremented

— Flexible instructions for bit addressing, rotate, and shift operations

DATA TYPES

The SAM87RC CPU performs operations on bits, bytes, BCD digits, and two-byte words. Bits in the register file can be set, cleared, complemented, and tested. Bits within a byte are numbered from 7 to 0, where bit 0 is the least significant (right-most) bit.

REGISTER ADDRESSING

To access an individual register, an 8-bit address in the range 0-255 or the 4-bit address of a working register is specified. Paired registers can be used to construct 16-bit data or 16-bit program memory or data memory addresses. For detailed information about register addressing, please refer to Section 2, "Address Spaces."

ADDRESSING MODES

There are seven explicit addressing modes: Register (R), Indirect Register (IR), Indexed (X), Direct (DA), Relative (RA), Immediate (IM), and Indirect (IA). For detailed descriptions of these addressing modes, please refer to Section 3, "Addressing Modes."

Table 6-1. Instruction Group Summary

Mnemonic	Operands	Instruction
Load Instructions		
CLR	dst	Clear
LD	dst, src	Load
LDB	dst, src	Load bit
LDE	dst, src	Load external data memory
LDC	dst, src	Load program memory
LDED	dst, src	Load external data memory and decrement
LDCD	dst, src	Load program memory and decrement
LDEI	dst, src	Load external data memory and increment
LDCI	dst, src	Load program memory and increment
LDEPD	dst, src	Load external data memory with pre-decrement
LDCPD	dst, src	Load program memory with pre-decrement
LDEPI	dst, src	Load external data memory with pre-increment
LDCPI	dst, src	Load program memory with pre-increment
LDW	dst, src	Load word
POP	dst	Pop from stack
POPUD	dst, src	Pop user stack (decrementing)
POPUI	dst, src	Pop user stack (incrementing)
PUSH	src	Push to stack
PUSHUD	dst, src	Push user stack (decrementing)
PUSHUI	dst, src	Push user stack (incrementing)

Table 6-1. Instruction Group Summary (Continued)

Mnemonic	Operands	Instruction
Arithmetic Instructions		
ADC	dst, src	Add with carry
ADD	dst, src	Add
CP	dst, src	Compare
DA	dst	Decimal adjust
DEC	dst	Decrement
DECW	dst	Decrement word
DIV	dst, src	Divide
INC	dst	Increment
INCW	dst	Increment word
MULT	dst, src	Multiply
SBC	dst, src	Subtract with carry
SUB	dst, src	Subtract
Logic Instructions		
AND	dst, src	Logical AND
COM	dst	Complement
OR	dst, src	Logical OR
XOR	dst, src	Logical exclusive OR

Table 6-1. Instruction Group Summary (Continued)

Mnemonic	Operands	Instruction
Program Control Instructions		
BTJRF	dst, src	Bit test and jump relative on false
BTJRT	dst, src	Bit test and jump relative on true
CALL	dst	Call procedure
CPIJE	dst, src	Compare, increment and jump on equal
CPIJNE	dst, src	Compare, increment and jump on non-equal
DJNZ	r, dst	Decrement register and jump on non-zero
ENTER		Enter
EXIT		Exit
IRET		Interrupt return
JP	cc dst	Jump on condition code
JP	dst	Jump unconditional
JR	cc dst	Jump relative on condition code
NEXT		Next
RET		Return
WFI		Wait for interrupt
Bit Manipulation Instructions		
BAND	dst, src	Bit AND
BCP	dst, src	Bit compare
BITC	dst	Bit complement
BITR	dst	Bit reset
BITS	dst	Bit set
BOR	dst, src	Bit OR
BXOR	dst, src	Bit XOR
TCM	dst, src	Test complement under mask
TM	dst, src	Test under mask

Table 6-1. Instruction Group Summary (Concluded)

Mnemonic	Operands	Instruction
Rotate and Shift Instructions		
RL	dst	Rotate left
RLC	dst	Rotate left through carry
RR	dst	Rotate right
RRC	dst	Rotate right through carry
SRA	dst	Shift right arithmetic
SWAP	dst	Swap nibbles
CPU Control Instructions		
CCF		Complement carry flag
DI		Disable interrupts
EI		Enable interrupts
IDLE		Enter Idle mode
NOP		No operation
RCF		Reset carry flag
SB0		Set bank 0
SB1		Set bank 1
SCF		Set carry flag
SRP	src	Set register pointers
SRP0	src	Set register pointer 0
SRP1	src	Set register pointer 1
STOP		Enter Stop mode

FLAGS REGISTER (FLAGS)

The flags register FLAGS contains eight bits that describe the current status of CPU operations. Four of these bits, FLAGS.7–FLAGS.4, can be tested and used with conditional jump instructions; two others FLAGS.3 and FLAGS.2 are used for BCD arithmetic.

The FLAGS register also contains a bit to indicate the status of fast interrupt processing (FLAGS.1) and a bank address status bit (FLAGS.0) to indicate whether bank 0 or bank 1 is currently being addressed. FLAGS register can be set or reset by instructions as long as its outcome does not affect the flags, such as, Load instruction.

Logical and Arithmetic instructions such as, AND, OR, XOR, ADD, and SUB can affect the Flags register. For example, the AND instruction updates the Zero, Sign and Overflow flags based on the outcome of the AND instruction. If the AND instruction uses the Flags register as the destination, then simultaneously, two write will occur to the Flags register producing an unpredictable result.

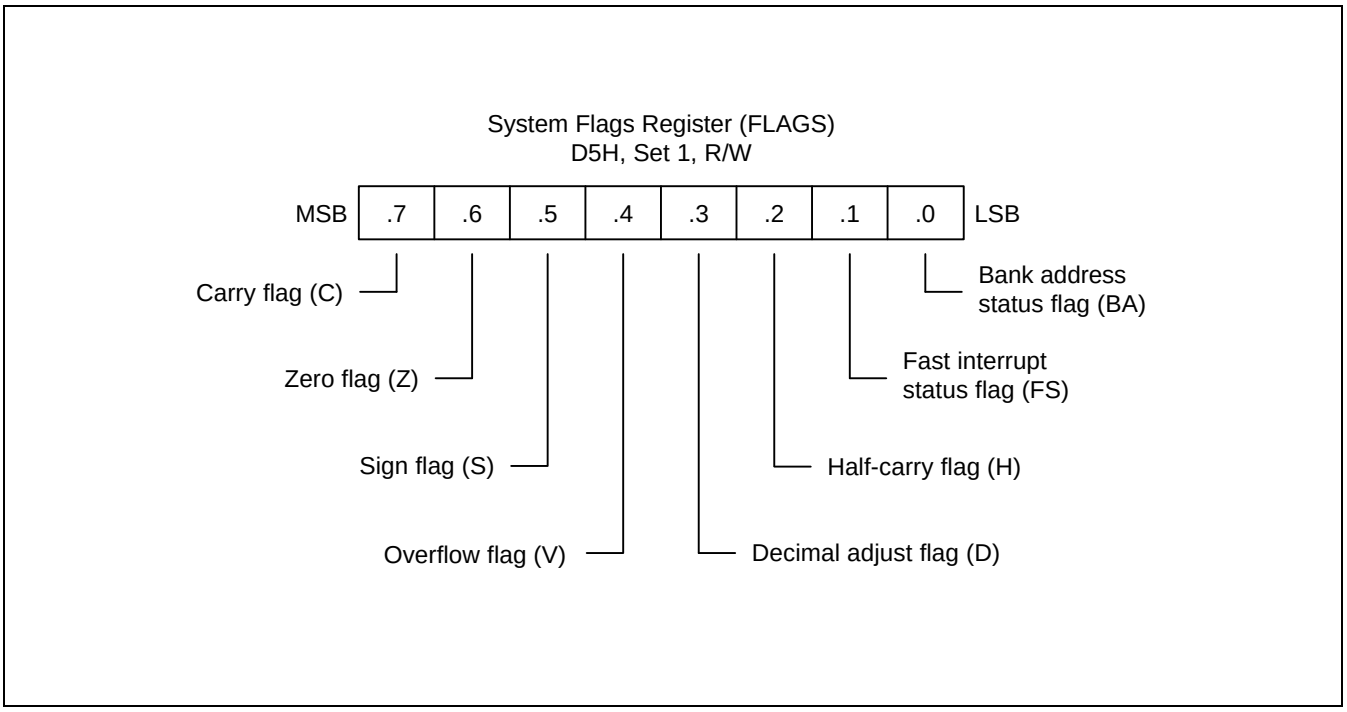

Figure 6-1. System Flags Register (FLAGS)

FLAG DESCRIPTIONS

C Carry Flag (FLAGS.7)

The C flag is set to "1" if the result from an arithmetic operation generates a carry-out from or a borrow to the bit 7 position (MSB). After rotate and shift operations, it contains the last value shifted out of the specified register. Program instructions can set, clear, or complement the carry flag.

Z Zero Flag (FLAGS.6)

For arithmetic and logic operations, the Z flag is set to "1" if the result of the operation is zero. For operations that test register bits, and for shift and rotate operations, the Z flag is set to "1" if the result is logic zero.

S Sign Flag (FLAGS.5)

Following arithmetic, logic, rotate, or shift operations, the sign bit identifies the state of the MSB of the result. A logic zero indicates a positive number and a logic one indicates a negative number.

V Overflow Flag (FLAGS.4)

The V flag is set to "1" when the result of a two's-complement operation is greater than + 127 or less than – 128. It is also cleared to "0" following logic operations.

D Decimal Adjust Flag (FLAGS.3)

The DA bit is used to specify what type of instruction was executed last during BCD operations, so that a subsequent decimal adjust operation can execute correctly. The DA bit is not usually accessed by programmers, and cannot be used as a test condition.

H Half-Carry Flag (FLAGS.2)

The H bit is set to "1" whenever an addition generates a carry-out of bit 3, or when a subtraction borrows out of bit 4. It is used by the Decimal Adjust (DA) instruction to convert the binary result of a previous addition or subtraction into the correct decimal (BCD) result. The H flag is seldom accessed directly by a program.

FIS Fast Interrupt Status Flag (FLAGS.1)

The FIS bit is set during a fast interrupt cycle and reset during the IRET following interrupt servicing. When set, it inhibits all interrupts and causes the fast interrupt return to be executed when the IRET instruction is executed.

BA Bank Address Flag (FLAGS.0)

The BA flag indicates which register bank in the set 1 area of the internal register file is currently selected, bank 0 or bank 1. The BA flag is cleared to "0" (select bank 0) when you execute the SB0 instruction and is set to "1" (select bank 1) when you execute the SB1 instruction.

INSTRUCTION SET NOTATION

Table 6-2. Flag Notation Conventions

Flag	Description
C	Carry flag
Z	Zero flag
S	Sign flag
V	Overflow flag
D	Decimal-adjust flag
H	Half-carry flag
0	Cleared to logic zero
1	Set to logic one
*	Set or cleared according to operation
–	Value is unaffected
x	Value is undefined

Table 6-3. Instruction Set Symbols

Symbol	Description
dst	Destination operand
src	Source operand
@	Indirect register address prefix
PC	Program counter
IP	Instruction pointer
FLAGS	Flags register (D5H)
RP	Register pointer
#	Immediate operand or register address prefix
H	Hexadecimal number suffix
D	Decimal number suffix
B	Binary number suffix
opc	Opcode

Table 6-4. Instruction Notation Conventions

Notation	Description	Actual Operand Range
cc	Condition code	See list of condition codes in Table 6-6.
r	Working register only	Rn (n = 0–15)
rb	Bit (b) of working register	Rn.b (n = 0–15, b = 0–7)
r0	Bit 0 (LSB) of working register	Rn (n = 0–15)
rr	Working register pair	RRp (p = 0, 2, 4, ..., 14)
R	Register or working register	reg or Rn (reg = 0–255, n = 0–15)
Rb	Bit 'b' of register or working register	reg.b (reg = 0–255, b = 0–7)
RR	Register pair or working register pair	reg or RRp (reg = 0–254, even number only, where p = 0, 2, ..., 14)
IA	Indirect addressing mode	addr (addr = 0–254, even number only)
Ir	Indirect working register only	@Rn (n = 0–15)
IR	Indirect register or indirect working register	@Rn or @reg (reg = 0–255, n = 0–15)
Irr	Indirect working register pair only	@RRp (p = 0, 2, ..., 14)
IRR	Indirect register pair or indirect working register pair	@RRp or @reg (reg = 0–254, even only, where p = 0, 2, ..., 14)
X	Indexed addressing mode	#reg [Rn] (reg = 0–255, n = 0–15)
XS	Indexed (short offset) addressing mode	#addr [RRp] (addr = range –128 to +127, where p = 0, 2, ..., 14)
xl	Indexed (long offset) addressing mode	#addr [RRp] (addr = range 0–65535, where p = 0, 2, ..., 14)
da	Direct addressing mode	addr (addr = range 0–65535)
ra	Relative addressing mode	addr (addr = number in the range +127 to –128 that is an offset relative to the address of the next instruction)
im	Immediate addressing mode	#data (data = 0–255)
iml	Immediate (long) addressing mode	#data (data = range 0–65535)

Table 6-5. Opcode Quick Reference

OPCODE MAP									
	LOWER NIBBLE (HEX)								
	–	0	1	2	3	4	5	6	7
U	0	DEC R1	DEC IR1	ADD r1, r2	ADD r1, Ir2	ADD R2, R1	ADD IR2, R1	ADD R1, IM	BOR r0–Rb
P	1	RLC R1	RLC IR1	ADC r1, r2	ADC r1, Ir2	ADC R2, R1	ADC IR2, R1	ADC R1, IM	BCP r1.b, R2
P	2	INC R1	INC IR1	SUB r1, r2	SUB r1, Ir2	SUB R2, R1	SUB IR2, R1	SUB R1, IM	BXOR r0–Rb
E	3	JP IRR1	SRP/0/1 IM	SBC r1, r2	SBC r1, Ir2	SBC R2, R1	SBC IR2, R1	SBC R1, IM	BTJR r2.b, RA
R	4	DA R1	DA IR1	OR r1, r2	OR r1, Ir2	OR R2, R1	OR IR2, R1	OR R1, IM	LDB r0–Rb
	5	POP R1	POP IR1	AND r1, r2	AND r1, Ir2	AND R2, R1	AND IR2, R1	AND R1, IM	BITC r1.b
N	6	COM R1	COM IR1	TCM r1, r2	TCM r1, Ir2	TCM R2, R1	TCM IR2, R1	TCM R1, IM	BAND r0–Rb
I	7	PUSH R2	PUSH IR2	TM r1, r2	TM r1, Ir2	TM R2, R1	TM IR2, R1	TM R1, IM	BIT r1.b
B	8	DECW RR1	DECW IR1	PUSHUD IR1, R2	PUSHUI IR1, R2	MULT R2, RR1	MULT IR2, RR1	MULT IM, RR1	LD r1, x, r2
B	9	RL R1	RL IR1	POPUD IR2, R1	POPUI IR2, R1	DIV R2, RR1	DIV IR2, RR1	DIV IM, RR1	LD r2, x, r1
L	A	INCW RR1	INCW IR1	CP r1, r2	CP r1, Ir2	CP R2, R1	CP IR2, R1	CP R1, IM	LDC r1, Irr2, xL
E	B	CLR R1	CLR IR1	XOR r1, r2	XOR r1, Ir2	XOR R2, R1	XOR IR2, R1	XOR R1, IM	LDC r2, Irr2, xL
	C	RRC R1	RRC IR1	CPIJE Ir, r2, RA	LDC r1, Irr2	LDW RR2, RR1	LDW IR2, RR1	LDW RR1, IML	LD r1, Ir2
H	D	SRA R1	SRA IR1	CPIJNE Irr, r2, RA	LDC r2, Irr1	CALL IA1		LD IR1, IM	LD Ir1, r2
E	E	RR R1	RR IR1	LDCD r1, Irr2	LDCI r1, Irr2	LD R2, R1	LD R2, IR1	LD R1, IM	LDC r1, Irr2, xs
X	F	SWAP R1	SWAP IR1	LDCPD r2, Irr1	LDCPI r2, Irr1	CALL IRR1	LD IR2, R1	CALL DA1	LDC r2, Irr1, xs

Table 6-5. Opcode Quick Reference (Continued)

OPCODE MAP									
	LOWER NIBBLE (HEX)								
	–	8	9	A	B	C	D	E	F
U	0	LD r1, R2	LD r2, R1	DJNZ r1, RA	JR cc, RA	LD r1, IM	JP cc dA	INC r1	NEXT
P	1	↓	↓	↓	↓	↓	↓	↓	ENTER
P	2								EXIT
E	3								WFI
R	4								SB0
	5								SB1
N	6								IDLE
I	7	↓	↓	↓	↓	↓	↓	↓	STOP
B	8								DI
B	9								EI
L	A								RET
E	B								IRET
	C								RCF
H	D	↓	↓	↓	↓	↓	↓	↓	SCF
E	E								CCF
X	F	LD r1, R2	LD r2, R1	DJNZ r1, RA	JR cc, RA	LD r1, IM	JP cc, DA	INC r1	NOP

CONDITION CODES

The opcode of a conditional jump always contains a 4-bit field called the condition code (cc). This specifies under which conditions it is to execute the jump. For example, a conditional jump with the condition code for "equal" after a compare operation only jumps if the two operands are equal. Condition codes are listed in Table 6-6.

The carry (C), zero (Z), sign (S), and overflow (V) flags are used to control the operation of conditional jump instructions.

Table 6-6. Condition Codes

Binary	Mnemonic	Description	Flags Set
0000	F	Always false	–
1000	T	Always true	–
0111 (note)	C	Carry	C = 1
1111 (note)	NC	No carry	C = 0
0110 (note)	Z	Zero	Z = 1
1110 (note)	NZ	Not zero	Z = 0
1101	PL	Plus	S = 0
0101	MI	Minus	S = 1
0100	OV	Overflow	V = 1
1100	NOV	No overflow	V = 0
0110 (note)	EQ	Equal	Z = 1
1110 (note)	NE	Not equal	Z = 0
1001	GE	Greater than or equal	(S XOR V) = 0
0001	LT	Less than	(S XOR V) = 1
1010	GT	Greater than	(Z OR (S XOR V)) = 0
0010	LE	Less than or equal	(Z OR (S XOR V)) = 1
1111 (note)	UGE	Unsigned greater than or equal	C = 0
0111 (note)	ULT	Unsigned less than	C = 1
1011	UGT	Unsigned greater than	(C = 0 AND Z = 0) = 1
0011	ULE	Unsigned less than or equal	(C OR Z) = 1

NOTES:

1. It indicates condition codes that are related to two different mnemonics but which test the same flag. For example, Z and EQ are both true if the zero flag (Z) is set, but after an ADD instruction, Z would probably be used; after a CP instruction, however, EQ would probably be used.
2. For operations involving unsigned numbers, the special condition codes UGE, ULT, UGT, and ULE must be used.

INSTRUCTION DESCRIPTIONS

This section contains detailed information and programming examples for each instruction in the SAM8 instruction set. Information is arranged in a consistent format for improved readability and for fast referencing. The following information is included in each instruction description:

— Instruction name (mnemonic)
— Full instruction name
— Source/destination format of the instruction operand
— Shorthand notation of the instruction's operation
— Textual description of the instruction's effect
— Specific flag settings affected by the instruction
— Detailed description of the instruction's format, execution time, and addressing mode(s)
— Programming example(s) explaining how to use the instruction

ADC — Add with carry

ADC dst, src

Operation: dst ← dst + src + c

The source operand, along with the setting of the carry flag, is added to the destination operand and the sum is stored in the destination. The contents of the source are unaffected. Two's-complement addition is performed. In multiple precision arithmetic, this instruction permits the carry from the addition of low-order operands to be carried into the addition of high-order operands.

Flags:

C: Set if there is a carry from the most significant bit of the result; cleared otherwise.
Z: Set if the result is "0"; cleared otherwise.
S: Set if the result is negative; cleared otherwise.
V: Set if arithmetic overflow occurs, that is, if both operands are of the same sign and the result is of the opposite sign; cleared otherwise.
D: Always cleared to "0".
H: Set if there is a carry from the most significant bit of the low-order four bits of the result; cleared otherwise.

Format:

			Bytes	Cycles	Opcode (Hex)	Addr Mode dst	Addr Mode src
opc	dst | src		2	4	12	r	r
				6	13	r	lr
opc	src	dst	3	6	14	R	R
				6	15	R	IR
opc	dst	src	3	6	16	R	IM

Examples: Given: R1 = 10H, R2 = 03H, C flag = "1", register 01H = 20H, register 02H = 03H, and register 03H = 0AH:

ADC R1, R2 → R1 = 14H, R2 = 03H
ADC R1, @R2 → R1 = 1BH, R2 = 03H
ADC 01H, 02H → Register 01H = 24H, register 02H = 03H
ADC 01H, @02H → Register 01H = 2BH, register 02H = 03H
ADC 01H, #11H → Register 01H = 32H

In the first example, destination register R1 contains the value 10H, the carry flag is set to "1", and the source working register R2 contains the value 03H. The statement "ADC R1, R2" adds 03H and the carry flag value ("1") to the destination value 10H, leaving 14H in register R1.

ADD — Add

ADD dst, src

Operation: dst ← dst + src

The source operand is added to the destination operand and the sum is stored in the destination. The contents of the source are unaffected. Two's-complement addition is performed.

Flags:
C: Set if there is a carry from the most significant bit of the result; cleared otherwise.
Z: Set if the result is "0"; cleared otherwise.
S: Set if the result is negative; cleared otherwise.
V: Set if arithmetic overflow occurred, that is, if both operands are of the same sign and the result is of the opposite sign; cleared otherwise.
D: Always cleared to "0".
H: Set if a carry from the low-order nibble occurred.

Format:

	Bytes	Cycles	Opcode (Hex)	Addr Mode dst	src
opc | dst | src	2	4	02	r	r
		6	03	r	lr
opc | src | dst	3	6	04	R	R
		6	05	R	IR
opc | dst | src	3	6	06	R	IM

Examples: Given: R1 = 12H, R2 = 03H, register 01H = 21H, register 02H = 03H, register 03H = 0AH:

ADD R1, R2 → R1 = 15H, R2 = 03H
ADD R1, @R2 → R1 = 1CH, R2 = 03H
ADD 01H, 02H → Register 01H = 24H, register 02H = 03H
ADD 01H, @02H → Register 01H = 2BH, register 02H = 03H
ADD 01H, #25H → Register 01H = 46H

In the first example, destination working register R1 contains 12H and the source working register R2 contains 03H. The statement "ADD R1, R2" adds 03H to 12H, leaving the value 15H in register R1.

AND — Logical AND

AND dst, src

Operation: dst ← dst AND src

The source operand is logically ANDed with the destination operand. The result is stored in the destination. The AND operation results in a "1" bit being stored whenever the corresponding bits in the two operands are both logic ones; otherwise a "0" bit value is stored. The contents of the source are unaffected.

Flags:
C: Unaffected.
Z: Set if the result is "0"; cleared otherwise.
S: Set if the result bit 7 is set; cleared otherwise.
V: Always cleared to "0".
D: Unaffected.
H: Unaffected.

Format:

			Bytes	Cycles	Opcode (Hex)	Addr Mode dst	Addr Mode src
opc	dst | src		2	4	52	r	r
				6	53	r	lr
opc	src	dst	3	6	54	R	R
				6	55	R	IR
opc	dst	src	3	6	56	R	IM

Examples: Given: R1 = 12H, R2 = 03H, register 01H = 21H, register 02H = 03H, register 03H = 0AH:

AND R1, R2 → R1 = 02H, R2 = 03H
AND R1, @R2 → R1 = 02H, R2 = 03H
AND 01H, 02H → Register 01H = 01H, register 02H = 03H
AND 01H, @02H → Register 01H = 00H, register 02H = 03H
AND 01H, #25H → Register 01H = 21H

In the first example, destination working register R1 contains the value 12H and the source working register R2 contains 03H. The statement "AND R1, R2" logically ANDs the source operand 03H with the destination operand value 12H, leaving the value 02H in register R1.

BAND — Bit AND

BAND dst, src.b

BAND dst.b, src

Operation: dst (0) ← dst (0) AND src (b)

or

dst (b) ← dst (b) AND src (0)

The specified bit of the source (or the destination) is logically ANDed with the zero bit (LSB) of the destination (or source). The resultant bit is stored in the specified bit of the destination. No other bits of the destination are affected. The source is unaffected.

Flags:
C: Unaffected.
Z: Set if the result is "0"; cleared otherwise.
S: Cleared to "0".
V: Undefined.
D: Unaffected.
H: Unaffected.

Format:

			Bytes	Cycles	Opcode (Hex)	Addr Mode dst	src
opc	dst | b | 0	src	3	6	67	r0	Rb
opc	src | b | 1	dst	3	6	67	Rb	r0

NOTE: In the second byte of the 3-byte instruction formats, the destination (or source) address is four bits, the bit address 'b' is three bits, and the LSB address value is one bit in length.

Examples: Given: R1 = 07H and register 01H = 05H:

BAND R1, 01H.1 → R1 = 06H, register 01H = 05H

BAND 01H.1, R1 → Register 01H = 05H, R1 = 07H

In the first example, source register 01H contains the value 05H (00000101B) and destination working register R1 contains 07H (00000111B). The statement "BAND R1, 01H.1" ANDs the bit 1 value of the source register ("0") with the bit 0 value of register R1 (destination), leaving the value 06H (00000110B) in register R1.

BCP — Bit Compare

BCP dst, src.b

Operation: dst (0) – src (b)

The specified bit of the source is compared to (subtracted from) bit zero (LSB) of the destination. The zero flag is set if the bits are the same; otherwise it is cleared. The contents of both operands are unaffected by the comparison.

Flags:
C: Unaffected.
Z: Set if the two bits are the same; cleared otherwise.
S: Cleared to "0".
V: Undefined.
D: Unaffected.
H: Unaffected.

Format:

			Bytes	Cycles	Opcode (Hex)	Addr Mode dst	Addr Mode src
opc	dst | b | 0	src	3	6	17	r0	Rb

NOTE: In the second byte of the instruction format, the destination address is four bits, the bit address 'b' is three bits, and the LSB address value is one bit in length.

Example: Given: R1 = 07H and register 01H = 01H:

BCP R1, 01H.1 → R1 = 07H, register 01H = 01H

If destination working register R1 contains the value 07H (00000111B) and the source register 01H contains the value 01H (00000001B), the statement "BCP R1, 01H.1" compares bit one of the source register (01H) and bit zero of the destination register (R1). Because the bit values are not identical, the zero flag bit (Z) is cleared in the FLAGS register (0D5H).

BITC — Bit Complement

BITC dst.b

Operation: dst(b) ← NOT dst(b)

This instruction complements the specified bit within the destination without affecting any other bits in the destination.

Flags:
C: Unaffected.
Z: Set if the result is "0"; cleared otherwise.
S: Cleared to "0".
V: Undefined.
D: Unaffected.
H: Unaffected.

Format:

	Bytes	Cycles	Opcode (Hex)	Addr Mode dst
opc | dst | b | 0	2	4	57	rb

NOTE: In the second byte of the instruction format, the destination address is four bits, the bit address 'b' is three bits, and the LSB address value is one bit in length.

Example: Given: R1 = 07H

BITC R1.1 → R1 = 05H

If working register R1 contains the value 07H (00000111B), the statement "BITC R1.1" complements bit one of the destination and leaves the value 05H (00000101B) in register R1. Because the result of the complement is not "0", the zero flag (Z) in the FLAGS register (0D5H) is cleared.

BITR — Bit Reset

BITR dst.b

Operation: dst(b) ← 0

The BITR instruction clears the specified bit within the destination without affecting any other bits in the destination.

Flags: No flags are affected.

Format:

	Bytes	Cycles	Opcode (Hex)	Addr Mode dst
opc | dst | b | 0	2	4	77	rb

NOTE: In the second byte of the instruction format, the destination address is four bits, the bit address 'b' is three bits, and the LSB address value is one bit in length.

Example: Given: R1 = 07H:

BITR R1.1 → R1 = 05H

If the value of working register R1 is 07H (00000111B), the statement "BITR R1.1" clears bit one of the destination register R1, leaving the value 05H (00000101B).

BITS — Bit Set

BITS dst.b

Operation: dst(b) ← 1

The BITS instruction sets the specified bit within the destination without affecting any other bits in the destination.

Flags: No flags are affected.

Format:

		Bytes	Cycles	Opcode (Hex)	Addr Mode dst
opc	dst | b | 1	2	4	77	rb

NOTE: In the second byte of the instruction format, the destination address is four bits, the bit address 'b' is three bits, and the LSB address value is one bit in length.

Example: Given: R1 = 07H:

BITS R1.3 → R1 = 0FH

If working register R1 contains the value 07H (00000111B), the statement "BITS R1.3" sets bit three of the destination register R1 to "1", leaving the value 0FH (00001111B).

BOR — Bit OR

BOR dst, src.b

BOR dst.b, src

Operation: dst (0) ← dst (0) OR src (b)

or

dst(b) ← dst(b) OR src (0)

The specified bit of the source (or the destination) is logically ORed with bit zero (LSB) of the destination (or the source). The resulting bit value is stored in the specified bit of the destination. No other bits of the destination are affected. The source is unaffected.

Flags:
C: Unaffected.
Z: Set if the result is "0"; cleared otherwise.
S: Cleared to "0".
V: Undefined.
D: Unaffected.
H: Unaffected.

Format:

			Bytes	Cycles	Opcode (Hex)	Addr Mode dst	Addr Mode src
opc	dst | b | 0	src	3	6	07	r0	Rb
opc	src | b | 1	dst	3	6	07	Rb	r0

NOTE: In the second byte of the 3-byte instruction formats, the destination (or source) address is four bits, the bit address 'b' is three bits, and the LSB address value is one bit.

Examples: Given: R1 = 07H and register 01H = 03H:

BOR R1, 01H.1 → R1 = 07H, register 01H = 03H

BOR 01H.2, R1 → Register 01H = 07H, R1 = 07H

In the first example, destination working register R1 contains the value 07H (00000111B) and source register 01H the value 03H (00000011B). The statement "BOR R1, 01H.1" logically ORs bit one of register 01H (source) with bit zero of R1 (destination). This leaves the same value (07H) in working register R1.

In the second example, destination register 01H contains the value 03H (00000011B) and the source working register R1 the value 07H (00000111B). The statement "BOR 01H.2, R1" logically ORs bit two of register 01H (destination) with bit zero of R1 (source). This leaves the value 07H in register 01H.

BTJRF — Bit Test, Jump Relative on False

BTJRF dst, src.b

Operation: If src (b) is a "0", then PC ← PC + dst

The specified bit within the source operand is tested. If it is a "0", the relative address is added to the program counter and control passes to the statement whose address is now in the PC; otherwise, the instruction following the BTJRF instruction is executed.

Flags: No flags are affected.

Format:

(Note 1)

opc	src | b | 0	dst

Bytes	Cycles	Opcode (Hex)	Addr Mode dst	src
3	10	37	RA	rb

NOTE: In the second byte of the instruction format, the source address is four bits, the bit address 'b' is three bits, and the LSB address value is one bit in length.

Example: Given: R1 = 07H:

BTJRF SKIP, R1.3 → PC jumps to SKIP location

If working register R1 contains the value 07H (00000111B), the statement "BTJRF SKIP, R1.3" tests bit 3. Because it is "0", the relative address is added to the PC and the PC jumps to the memory location pointed to by the SKIP. (Remember that the memory location must be within the allowed range of + 127 to – 128.)

BTJRT — Bit Test, Jump Relative on True

BTJRT dst, src.b

Operation: If src (b) is a "1", then PC ← PC + dst

The specified bit within the source operand is tested. If it is a "1", the relative address is added to the program counter and control passes to the statement whose address is now in the PC; otherwise, the instruction following the BTJRT instruction is executed.

Flags: No flags are affected.

Format:

(Note 1)

opc	src | b | 1	dst

Bytes	Cycles	Opcode (Hex)	Addr Mode dst	Addr Mode src
3	10	37	RA	rb

NOTE: In the second byte of the instruction format, the source address is four bits, the bit address 'b' is three bits, and the LSB address value is one bit in length.

Example: Given: R1 = 07H:

```
BTJRT   SKIP, R1.1
```

If working register R1 contains the value 07H (00000111B), the statement "BTJRT SKIP, R1.1" tests bit one in the source register (R1). Because it is a "1", the relative address is added to the PC and the PC jumps to the memory location pointed to by the SKIP. (Remember that the memory location must be within the allowed range of + 127 to – 128.)

BXOR — Bit XOR

BXOR dst, src.b

BXOR dst.b, src

Operation: dst (0) ← dst (0) XOR src (b)

or

dst(b) ← dst(b) XOR src (0)

The specified bit of the source (or the destination) is logically exclusive-ORed with bit zero (LSB) of the destination (or source). The result bit is stored in the specified bit of the destination. No other bits of the destination are affected. The source is unaffected.

Flags:
C: Unaffected.
Z: Set if the result is "0"; cleared otherwise.
S: Cleared to "0".
V: Undefined.
D: Unaffected.
H: Unaffected.

Format:

	Bytes	Cycles	Opcode (Hex)	Addr Mode dst	Addr Mode src
opc | dst | b | 0 | src	3	6	27	r0	Rb
opc | src | b | 1 | dst	3	6	27	Rb	r0

NOTE: In the second byte of the 3-byte instruction formats, the destination (or source) address is four bits, the bit address 'b' is three bits, and the LSB address value is one bit in length.

Examples: Given: R1 = 07H (00000111B) and register 01H = 03H (00000011B):

BXOR R1, 01H.1 → R1 = 06H, register 01H = 03H

BXOR 01H.2, R1 → Register 01H = 07H, R1 = 07H

In the first example, destination working register R1 has the value 07H (00000111B) and source register 01H has the value 03H (00000011B). The statement "BXOR R1, 01H.1" exclusive-ORs bit one of register 01H (source) with bit zero of R1 (destination). The result bit value is stored in bit zero of R1, changing its value from 07H to 06H. The value of source register 01H is unaffected.

CALL — Call Procedure

CALL dst

Operation:
SP ← SP – 1
@SP ← PCL
SP ← SP –1
@SP ← PCH
PC ← dst

The current contents of the program counter are pushed onto the top of the stack. The program counter value used is the address of the first instruction following the CALL instruction. The specified destination address is then loaded into the program counter and points to the first instruction of a procedure. At the end of the procedure the return instruction (RET) can be used to return to the original program flow. RET pops the top of the stack back into the program counter.

Flags: No flags are affected.

Format:

	Bytes	Cycles	Opcode (Hex)	Addr Mode dst
opc | dst	3	14	F6	DA
opc | dst	2	12	F4	IRR
opc | dst	2	14	D4	IA

Examples: Given: R0 = 35H, R1 = 21H, PC = 1A47H, and SP = 0002H:

CALL 3521H → SP = 0000H
(Memory locations 0000H = 1AH, 0001H = 4AH, where 4AH is the address that follows the instruction.)
CALL @RR0 → SP = 0000H (0000H = 1AH, 0001H = 49H)
CALL #40H → SP = 0000H (0000H = 1AH, 0001H = 49H)

In the first example, if the program counter value is 1A47H and the stack pointer contains the value 0002H, the statement "CALL 3521H" pushes the current PC value onto the top of the stack. The stack pointer now points to memory location 0000H. The PC is then loaded with the value 3521H, the address of the first instruction in the program sequence to be executed.

If the contents of the program counter and stack pointer are the same as in the first example, the statement "CALL @RR0" produces the same result except that the 49H is stored in stack location 0001H (because the two-byte instruction format was used). The PC is then loaded with the value 3521H, the address of the first instruction in the program sequence to be executed. Assuming that the contents of the program counter and stack pointer are the same as in the first example, if program address 0040H contains 35H and program address 0041H contains 21H, the statement "CALL #40H" produces the same result as in the second example.

CCF — Complement Carry Flag

CCF

Operation: C ← NOT C

The carry flag (C) is complemented. If C = "1", the value of the carry flag is changed to logic zero; if C = "0", the value of the carry flag is changed to logic one.

Flags: **C:** Complemented.

No other flags are affected.

Format:

	Bytes	Cycles	Opcode (Hex)
opc	1	4	EF

Example: Given: The carry flag = "0":

CCF

If the carry flag = "0", the CCF instruction complements it in the FLAGS register (0D5H), changing its value from logic zero to logic one.

CLR — Clear

CLR dst

Operation: dst ← "0"

The destination location is cleared to "0".

Flags: No flags are affected.

Format:

	Bytes	Cycles	Opcode (Hex)	Addr Mode dst
opc | dst	2	4	B0	R
		4	B1	IR

Examples: Given: Register 00H = 4FH, register 01H = 02H, and register 02H = 5EH:

CLR 00H → Register 00H = 00H

CLR @01H → Register 01H = 02H, register 02H = 00H

In Register (R) addressing mode, the statement "CLR 00H" clears the destination register 00H value to 00H. In the second example, the statement "CLR @01H" uses Indirect Register (IR) addressing mode to clear the 02H register value to 00H.

COM — Complement

COM dst

Operation: dst ← NOT dst

The contents of the destination location are complemented (one's complement); all "1s" are changed to "0s", and vice-versa.

Flags:
C: Unaffected.
Z: Set if the result is "0"; cleared otherwise.
S: Set if the result bit 7 is set; cleared otherwise.
V: Always reset to "0".
D: Unaffected.
H: Unaffected.

Format:

	Bytes	Cycles	Opcode (Hex)	Addr Mode dst
opc | dst	2	4	60	R
		4	61	IR

Examples: Given: R1 = 07H and register 07H = 0F1H:

COM R1 → R1 = 0F8H
COM @R1 → R1 = 07H, register 07H = 0EH

In the first example, destination working register R1 contains the value 07H (00000111B). The statement "COM R1" complements all the bits in R1: all logic ones are changed to logic zeros, and vice-versa, leaving the value 0F8H (11111000B).

In the second example, Indirect Register (IR) addressing mode is used to complement the value of destination register 07H (11110001B), leaving the new value 0EH (00001110B).

CP — Compare

CP dst, src

Operation: dst – src

The source operand is compared to (subtracted from) the destination operand, and the appropriate flags are set accordingly. The contents of both operands are unaffected by the comparison.

Flags:
C: Set if a "borrow" occurred (src > dst); cleared otherwise.
Z: Set if the result is "0"; cleared otherwise.
S: Set if the result is negative; cleared otherwise.
V: Set if arithmetic overflow occurred; cleared otherwise.
D: Unaffected.
H: Unaffected.

Format:

			Bytes	Cycles	Opcode (Hex)	Addr Mode dst	Addr Mode src
opc	dst | src		2	4	A2	r	r
				6	A3	r	lr
opc	src	dst	3	6	A4	R	R
				6	A5	R	IR
opc	dst	src	3	6	A6	R	IM

Examples: 1. Given: R1 = 02H and R2 = 03H:

```
        CP      R1, R2  →   Set the C and S flags
```

Destination working register R1 contains the value 02H and source register R2 contains the value 03H. The statement "CP R1, R2" subtracts the R2 value (source/subtrahend) from the R1 value (destination/minuend). Because a "borrow" occurs and the difference is negative, C and S are "1".

2. Given: R1 = 05H and R2 = 0AH:

```
        CP      R1, R2
        JP      UGE, SKIP
        INC     R1
SKIP    LD      R3, R1
```

In this example, destination working register R1 contains the value 05H which is less than the contents of the source working register R2 (0AH). The statement "CP R1, R2" generates C = "1" and the JP instruction does not jump to the SKIP location. After the statement "LD R3, R1" executes, the value 06H remains in working register R3.

CPIJE — Compare, Increment, and Jump on Equal

CPIJE dst, src, RA

Operation: If dst – src = "0", PC ← PC + RA

Ir ← Ir + 1

The source operand is compared to (subtracted from) the destination operand. If the result is "0", the relative address is added to the program counter and control passes to the statement whose address is now in the program counter. Otherwise, the instruction immediately following the CPIJE instruction is executed. In either case, the source pointer is incremented by one before the next instruction is executed.

Flags: No flags are affected.

Format:

				Bytes	Cycles	Opcode (Hex)	Addr Mode dst	src
opc	src	dst	RA	3	12	C2	r	Ir

NOTE: Execution time is 18 cycles if the jump is taken or 16 cycles if it is not taken.

Example: Given: R1 = 02H, R2 = 03H, and register 03H = 02H:

CPIJE R1, @R2, SKIP → R2 = 04H, PC jumps to SKIP location

In this example, working register R1 contains the value 02H, working register R2 the value 03H, and register 03 contains 02H. The statement "CPIJE R1, @R2, SKIP" compares the @R2 value 02H (00000010B) to 02H (00000010B). Because the result of the comparison is *equal*, the relative address is added to the PC and the PC then jumps to the memory location pointed to by SKIP. The source register (R2) is incremented by one, leaving a value of 04H. (Remember that the memory location must be within the allowed range of + 127 to – 128.)

CPIJNE — Compare, Increment, and Jump on Non-Equal

CPIJNE dst, src, RA

Operation: If dst – src ¡Á "0", PC ← PC + RA

Ir ← Ir + 1

The source operand is compared to (subtracted from) the destination operand. If the result is not "0", the relative address is added to the program counter and control passes to the statement whose address is now in the program counter; otherwise the instruction following the CPIJNE instruction is executed. In either case the source pointer is incremented by one before the next instruction.

Flags: No flags are affected.

Format:

				Bytes	Cycles	Opcode (Hex)	Addr Mode dst	Addr Mode src
opc	src	dst	RA	3	12	D2	r	Ir

NOTE: Execution time is 18 cycles if the jump is taken or 16 cycles if it is not taken.

Example: Given: R1 = 02H, R2 = 03H, and register 03H = 04H:

CPIJNE R1, @R2, SKIP → R2 = 04H, PC jumps to SKIP location

Working register R1 contains the value 02H, working register R2 (the source pointer) the value 03H, and general register 03 the value 04H. The statement "CPIJNE R1, @R2, SKIP" subtracts 04H (00000100B) from 02H (00000010B). Because the result of the comparison is *non-equal*, the relative address is added to the PC and the PC then jumps to the memory location pointed to by SKIP. The source pointer register (R2) is also incremented by one, leaving a value of 04H. (Remember that the memory location must be within the allowed range of + 127 to – 128.)

DA — Decimal Adjust

DA dst

Operation: dst ← DA dst

The destination operand is adjusted to form two 4-bit BCD digits following an addition or subtraction operation. For addition (ADD, ADC) or subtraction (SUB, SBC), the following table indicates the operation performed. (The operation is undefined if the destination operand was not the result of a valid addition or subtraction of BCD digits):

Instruction	Carry Before DA	Bits 4–7 Value (Hex)	H Flag Before DA	Bits 0–3 Value (Hex)	Number Added to Byte	Carry After DA
	0	0–9	0	0–9	00	0
	0	0–8	0	A–F	06	0
	0	0–9	1	0–3	06	0
ADD	0	A–F	0	0–9	60	1
ADC	0	9–F	0	A–F	66	1
	0	A–F	1	0–3	66	1
	1	0–2	0	0–9	60	1
	1	0–2	0	A–F	66	1
	1	0–3	1	0–3	66	1
	0	0–9	0	0–9	00 = – 00	0
SUB	0	0–8	1	6–F	FA = – 06	0
SBC	1	7–F	0	0–9	A0 = – 60	1
	1	6–F	1	6–F	9A = – 66	1

Flags:
C: Set if there was a carry from the most significant bit; cleared otherwise (see table).
Z: Set if result is "0"; cleared otherwise.
S: Set if result bit 7 is set; cleared otherwise.
V: Undefined.
D: Unaffected.
H: Unaffected.

Format:

opc	dst

Bytes	Cycles	Opcode (Hex)	Addr Mode dst
2	4	40	R
	4	41	IR

DA — Decimal Adjust

DA (Continued)

Example: Given: Working register R0 contains the value 15 (BCD), working register R1 contains 27 (BCD), and address 27H contains 46 (BCD):

```
ADD     R1, R0      ;     C ← "0", H ← "0", Bits 4–7 = 3, bits 0–3 = C, R1 ← 3CH

DA      R1          ;     R1 ← 3CH + 06
```

If addition is performed using the BCD values 15 and 27, the result should be 42. The sum is incorrect, however, when the binary representations are added in the destination location using standard binary arithmetic:

```
  0 0 0 1   0 1 0 1       15
+ 0 0 1 0   0 1 1 1       27
  0 0 1 1   1 1 0 0   =   3CH
```

The DA instruction adjusts this result so that the correct BCD representation is obtained:

```
  0 0 1 1   1 1 0 0
+ 0 0 0 0   0 1 1 0
  0 1 0 0   0 0 1 0   =   42
```

Assuming the same values given above, the statements

```
SUB     27H, R0     ;     C ← "0", H ← "0", Bits 4–7 = 3, bits 0–3 = 1

DA      @R1         ;     @R1 ← 31–0
```

leave the value 31 (BCD) in address 27H (@R1).

DEC — Decrement

DEC dst

Operation: dst ← dst – 1

The contents of the destination operand are decremented by one.

Flags:
C: Unaffected.
Z: Set if the result is "0"; cleared otherwise.
S: Set if result is negative; cleared otherwise.
V: Set if arithmetic overflow occurred; cleared otherwise.
D: Unaffected.
H: Unaffected.

Format:

	Bytes	Cycles	Opcode (Hex)	Addr Mode dst
opc | dst	2	4	00	R
		4	01	IR

Examples: Given: R1 = 03H and register 03H = 10H:

DEC R1 → R1 = 02H
DEC @R1 → Register 03H = 0FH

In the first example, if working register R1 contains the value 03H, the statement "DEC R1" decrements the hexadecimal value by one, leaving the value 02H. In the second example, the statement "DEC @R1" decrements the value 10H contained in the destination register 03H by one, leaving the value 0FH.

DECW — Decrement Word

DECW dst

Operation: dst ← dst – 1

The contents of the destination location (which must be an even address) and the operand following that location are treated as a single 16-bit value that is decremented by one.

Flags:
C: Unaffected.
Z: Set if the result is "0"; cleared otherwise.
S: Set if the result is negative; cleared otherwise.
V: Set if arithmetic overflow occurred; cleared otherwise.
D: Unaffected.
H: Unaffected.

Format:

opc	dst

Bytes	Cycles	Opcode (Hex)	Addr Mode dst
2	8	80	RR
	8	81	IR

Examples: Given: R0 = 12H, R1 = 34H, R2 = 30H, register 30H = 0FH, and register 31H = 21H:

```
DECW    RR0     →    R0 = 12H, R1 = 33H
DECW    @R2     →    Register 30H = 0FH, register 31H = 20H
```

In the first example, destination register R0 contains the value 12H and register R1 the value 34H. The statement "DECW RR0" addresses R0 and the following operand R1 as a 16-bit word and decrements the value of R1 by one, leaving the value 33H.

NOTE: A system malfunction may occur if you use a Zero flag (FLAGS.6) result together with a DECW instruction. To avoid this problem, we recommend that you use DECW as shown in the following example:

```
LOOP:   DECW    RR0
        LD      R2, R1
        OR      R2, R0
        JR      NZ, LOOP
```

DI — Disable Interrupts

DI

Operation: SYM (0) ← 0

Bit zero of the system mode control register, SYM.0, is cleared to "0", globally disabling all interrupt processing. Interrupt requests will continue to set their respective interrupt pending bits, but the CPU will not service them while interrupt processing is disabled.

Flags: No flags are affected.

Format:

	Bytes	Cycles	Opcode (Hex)
opc	1	4	8F

Example: Given: SYM = 01H:

DI

If the value of the SYM register is 01H, the statement "DI" leaves the new value 00H in the register and clears SYM.0 to "0", disabling interrupt processing.

Before changing IMR, interrupt pending and interrupt source control register, be sure DI state.

DIV — Divide (Unsigned)

DIV dst, src

Operation: dst ÷ src

dst (UPPER) ← REMAINDER

dst (LOWER) ← QUOTIENT

The destination operand (16 bits) is divided by the source operand (8 bits). The quotient (8 bits) is stored in the lower half of the destination. The remainder (8 bits) is stored in the upper half of the destination. When the quotient is ≥ 2^8, the numbers stored in the upper and lower halves of the destination for quotient and remainder are incorrect. Both operands are treated as unsigned integers.

Flags:
C: Set if the V flag is set and quotient is between 2^8 and 2^9 –1; cleared otherwise.
Z: Set if divisor or quotient = "0"; cleared otherwise.
S: Set if MSB of quotient = "1"; cleared otherwise.
V: Set if quotient is ≥ 2^8 or if divisor = "0"; cleared otherwise.
D: Unaffected.
H: Unaffected.

Format:

opc	src	dst

Bytes	Cycles	Opcode (Hex)	Addr Mode dst	src
3	26/10	94	RR	R
	26/10	95	RR	IR
	26/10	96	RR	IM

NOTE: Execution takes 10 cycles if the divide-by-zero is attempted; otherwise it takes 26 cycles.

Examples: Given: R0 = 10H, R1 = 03H, R2 = 40H, register 40H = 80H:

DIV RR0, R2 → R0 = 03H, R1 = 40H

DIV RR0, @R2 → R0 = 03H, R1 = 20H

DIV RR0, #20H → R0 = 03H, R1 = 80H

In the first example, destination working register pair RR0 contains the values 10H (R0) and 03H (R1), and register R2 contains the value 40H. The statement "DIV RR0, R2" divides the 16-bit RR0 value by the 8-bit value of the R2 (source) register. After the DIV instruction, R0 contains the value 03H and R1 contains 40H. The 8-bit remainder is stored in the upper half of the destination register RR0 (R0) and the quotient in the lower half (R1).

DJNZ — Decrement and Jump if Non-Zero

DJNZ r, dst

Operation: r ← r – 1

If r ≠ 0, PC ← PC + dst

The working register being used as a counter is decremented. If the contents of the register are not logic zero after decrementing, the relative address is added to the program counter and control passes to the statement whose address is now in the PC. The range of the relative address is +127 to –128, and the original value of the PC is taken to be the address of the instruction byte following the DJNZ statement.

NOTE: In case of using DJNZ instruction, the working register being used as a counter should be set at the one of location 0C0H to 0CFH with SRP, SRP0, or SRP1 instruction.

Flags: No flags are affected.

Format:

	Bytes	Cycles	Opcode (Hex)	Addr Mode dst
r | opc | dst	2	8 (jump taken)	rA	RA
		8 (no jump)	r = 0 to F	

Example: Given: R1 = 02H and LOOP is the label of a relative address:

```
SRP     #0C0H
DJNZ    R1, LOOP
```

DJNZ is typically used to control a "loop" of instructions. In many cases, a label is used as the destination operand instead of a numeric relative address value. In the example, working register R1 contains the value 02H, and LOOP is the label for a relative address.

The statement "DJNZ R1, LOOP" decrements register R1 by one, leaving the value 01H. Because the contents of R1 after the decrement are non-zero, the jump is taken to the relative address specified by the LOOP label.

EI — Enable Interrupts

EI

Operation: SYM (0) ← 1

An EI instruction sets bit zero of the system mode register, SYM.0 to "1". This allows interrupts to be serviced as they occur (assuming they have highest priority). If an interrupt's pending bit was set while interrupt processing was disabled (by executing a DI instruction), it will be serviced when you execute the EI instruction.

Flags: No flags are affected.

Format:

	Bytes	Cycles	Opcode (Hex)
opc	1	4	9F

Example: Given: SYM = 00H:

EI

If the SYM register contains the value 00H, that is, if interrupts are currently disabled, the statement "EI" sets the SYM register to 01H, enabling all interrupts. (SYM.0 is the enable bit for global interrupt processing.)

ENTER — Enter

ENTER

Operation:

SP ← SP – 2
@SP ← IP
IP ← PC
PC ← @IP
IP ← IP + 2

This instruction is useful when implementing threaded-code languages. The contents of the instruction pointer are pushed to the stack. The program counter (PC) value is then written to the instruction pointer. The program memory word that is pointed to by the instruction pointer is loaded into the PC, and the instruction pointer is incremented by two.

Flags: No flags are affected.

Format:

	Bytes	Cycles	Opcode (Hex)
opc	1	14	1F

Example: The diagram below shows one example of how to use an ENTER statement.

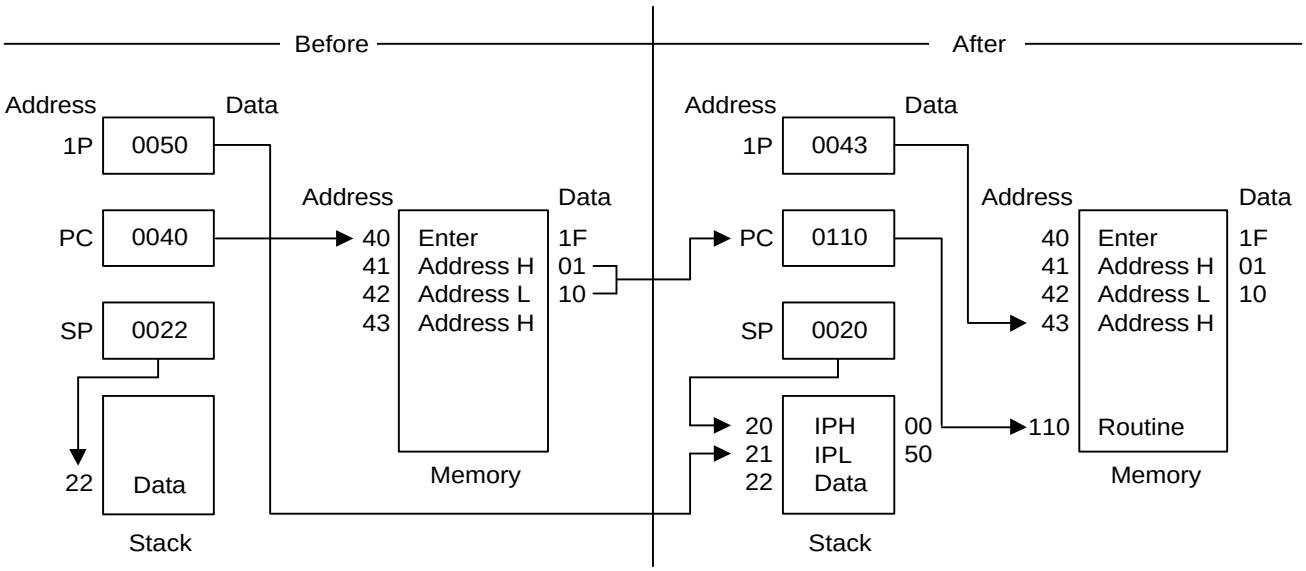

EXIT — Exit

EXIT

Operation:

IP ← @SP
SP ← SP + 2
PC ← @IP
IP ← IP + 2

This instruction is useful when implementing threaded-code languages. The stack value is popped and loaded into the instruction pointer. The program memory word that is pointed to by the instruction pointer is then loaded into the program counter, and the instruction pointer is incremented by two.

Flags: No flags are affected.

Format:

	Bytes	Cycles	Opcode (Hex)
opc	1	14 (internal stack)	2F
		16 (internal stack)	

Example: The diagram below shows one example of how to use an EXIT statement.

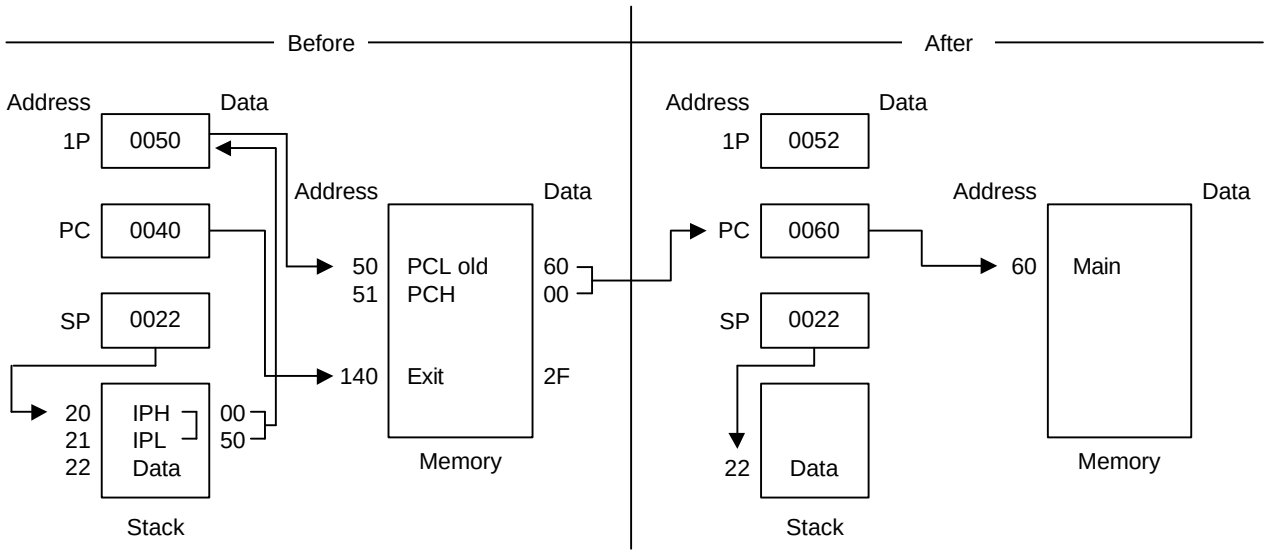

IDLE — Idle Operation

IDLE

Operation:

The IDLE instruction stops the CPU clock while allowing system clock oscillation to continue. Idle mode can be released by an interrupt request (IRQ) or an external reset operation.

Flags: No flags are affected.

Format:

	Bytes	Cycles	Opcode (Hex)
opc	1	4	6F

Example: The instruction

IDLE

Stops the CPU clock but not the system clock

INC — Increment

INC dst

Operation: dst ← dst + 1

The contents of the destination operand are incremented by one.

Flags:
C: Unaffected.
Z: Set if the result is "0"; cleared otherwise.
S: Set if the result is negative; cleared otherwise.
V: Set if arithmetic overflow occurred; cleared otherwise.
D: Unaffected.
H: Unaffected.

Format:

	Bytes	Cycles	Opcode (Hex)	Addr Mode dst
dst | opc	1	4	rE r = 0 to F	r
opc | dst	2	4	20	R
		4	21	IR

Examples: Given: R0 = 1BH, register 00H = 0CH, and register 1BH = 0FH:

INC R0 → R0 = 1CH
INC 00H → Register 00H = 0DH
INC @R0 → R0 = 1BH, register 01H = 10H

In the first example, if destination working register R0 contains the value 1BH, the statement "INC R0" leaves the value 1CH in that same register.

The next example shows the effect an INC instruction has on register 00H, assuming that it contains the value 0CH.

In the third example, INC is used in Indirect Register (IR) addressing mode to increment the value of register 1BH from 0FH to 10H.

INCW — Increment Word

INCW dst

Operation: dst ← dst + 1

The contents of the destination (which must be an even address) and the byte following that location are treated as a single 16-bit value that is incremented by one.

Flags:
C: Unaffected.
Z: Set if the result is "0"; cleared otherwise.
S: Set if the result is negative; cleared otherwise.
V: Set if arithmetic overflow occurred; cleared otherwise.
D: Unaffected.
H: Unaffected.

Format:

opc	dst

Bytes	Cycles	Opcode (Hex)	Addr Mode dst
2	8	A0	RR
	8	A1	IR

Examples: Given: R0 = 1AH, R1 = 02H, register 02H = 0FH, and register 03H = 0FFH:

INCW RR0 → R0 = 1AH, R1 = 03H
INCW @R1 → Register 02H = 10H, register 03H = 00H

In the first example, the working register pair RR0 contains the value 1AH in register R0 and 02H in register R1. The statement "INCW RR0" increments the 16-bit destination by one, leaving the value 03H in register R1. In the second example, the statement "INCW @R1" uses Indirect Register (IR) addressing mode to increment the contents of general register 03H from 0FFH to 00H and register 02H from 0FH to 10H.

NOTE: A system malfunction may occur if you use a Zero (Z) flag (FLAGS.6) result together with an INCW instruction. To avoid this problem, we recommend that you use INCW as shown in the following example:

```
LOOP:   INCW    RR0
        LD      R2, R1
        OR      R2, R0
        JR      NZ, LOOP
```

IRET — Interrupt Return

IRET IRET (Normal) IRET (Fast)

Operation:

IRET (Normal):
FLAGS ← @SP
SP ← SP + 1
PC ← @SP
SP ← SP + 2
SYM(0) ← 1

IRET (Fast):
PC ↔ IP
FLAGS ← FLAGS'
FIS ← 0

This instruction is used at the end of an interrupt service routine. It restores the flag register and the program counter. It also re-enables global interrupts. A "normal IRET" is executed only if the fast interrupt status bit (FIS, bit one of the FLAGS register, 0D5H) is cleared (= "0"). If a fast interrupt occurred, IRET clears the FIS bit that was set at the beginning of the service routine.

Flags: All flags are restored to their original settings (that is, the settings before the interrupt occurred).

Format:

IRET (Normal)	Bytes	Cycles	Opcode (Hex)
opc	1	10 (internal stack) 12 (internal stack)	BF

IRET (Fast)	Bytes	Cycles	Opcode (Hex)
opc	1	6	BF

Example: In the figure below, the instruction pointer is initially loaded with 100H in the main program before interrupts are enabled. When an interrupt occurs, the program counter and instruction pointer are swapped. This causes the PC to jump to address 100H and the IP to keep the return address. The last instruction in the service routine normally is a jump to IRET at address FFH. This causes the instruction pointer to be loaded with 100H "again" and the program counter to jump back to the main program. Now, the next interrupt can occur and the IP is still correct at 100H.

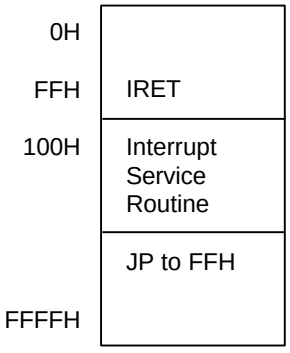

NOTE

In the fast interrupt example above, if the last instruction is not a jump to IRET, you must pay attention to the order of the last two instructions. The IRET cannot be immediately proceeded by a clearing of the interrupt status (as with a reset of the IPR register).

JP — Jump

JP cc, dst (Conditional)

JP dst (Unconditional)

Operation: If cc is true, PC ← dst

The conditional JUMP instruction transfers program control to the destination address if the condition specified by the condition code (cc) is true; otherwise, the instruction following the JP instruction is executed. The unconditional JP simply replaces the contents of the PC with the contents of the specified register pair. Control then passes to the statement addressed by the PC.

Flags: No flags are affected.

Format: (1)

(2)	Bytes	Cycles	Opcode (Hex)	Addr Mode dst
cc | opc / dst	3	8	ccD cc = 0 to F	DA
opc / dst	2	8	30	IRR

NOTES:
1. The 3-byte format is used for a conditional jump and the 2-byte format for an unconditional jump.
2. In the first byte of the three-byte instruction format (conditional jump), the condition code and the opcode are both four bits.

Examples: Given: The carry flag (C) = "1", register 00 = 01H, and register 01 = 20H:

JP C, LABEL_W → LABEL_W = 1000H, PC = 1000H

JP @00H → PC = 0120H

The first example shows a conditional JP. Assuming that the carry flag is set to "1", the statement
"JP C, LABEL_W" replaces the contents of the PC with the value 1000H and transfers control to that location. Had the carry flag not been set, control would then have passed to the statement immediately following the JP instruction.

The second example shows an unconditional JP. The statement "JP @00" replaces the contents of the PC with the contents of the register pair 00H and 01H, leaving the value 0120H.

JR — Jump Relative

JR cc, dst

Operation: If cc is true, PC ← PC + dst

If the condition specified by the condition code (cc) is true, the relative address is added to the program counter and control passes to the statement whose address is now in the program counter; otherwise, the instruction following the JR instruction is executed. (See list of condition codes).

The range of the relative address is +127, –128, and the original value of the program counter is taken to be the address of the first instruction byte following the JR statement.

Flags: No flags are affected.

Format:

(1)

cc | opc	dst

Bytes	Cycles	Opcode (Hex)	Addr Mode dst
2	6	ccB	RA
		cc = 0 to F	

NOTE: In the first byte of the two-byte instruction format, the condition code and the opcode are each four bits.

Example: Given: The carry flag = "1" and LABEL_X = 1FF7H:

JR C, LABEL_X → PC = 1FF7H

If the carry flag is set (that is, if the condition code is true), the statement "JR C, LABEL_X" will pass control to the statement whose address is now in the PC. Otherwise, the program instruction following the JR would be executed.

LD — Load

LD dst, src

Operation: dst ← src

The contents of the source are loaded into the destination. The source's contents are unaffected.

Flags: No flags are affected.

Format:

	Bytes	Cycles	Opcode (Hex)	Addr Mode dst	Addr Mode src
dst | opc / src	2	4	rC	r	IM
		4	r8	r	R
src | opc / dst	2	4	r9	R	r
			r = 0 to F		
opc / dst | src	2	4	C7	r	lr
		4	D7	lr	r
opc / src / dst	3	6	E4	R	R
		6	E5	R	IR
opc / dst / src	3	6	E6	R	IM
		6	D6	IR	IM
opc / src / dst	3	6	F5	IR	R
opc / dst | src / x	3	6	87	r	x [r]
opc / src | dst / x	3	6	97	x [r]	r

LD — Load

LD (Continued)

Examples: Given: R0 = 01H, R1 = 0AH, register 00H = 01H, register 01H = 20H, register 02H = 02H, LOOP = 30H, and register 3AH = 0FFH:

LD	R0, #10H	→	R0 = 10H
LD	R0, 01H	→	R0 = 20H, register 01H = 20H
LD	01H, R0	→	Register 01H = 01H, R0 = 01H
LD	R1, @R0	→	R1 = 20H, R0 = 01H
LD	@R0, R1	→	R0 = 01H, R1 = 0AH, register 01H = 0AH
LD	00H, 01H	→	Register 00H = 20H, register 01H = 20H
LD	02H, @00H	→	Register 02H = 20H, register 00H = 01H
LD	00H, #0AH	→	Register 00H = 0AH
LD	@00H, #10H	→	Register 00H = 01H, register 01H = 10H
LD	@00H, 02H	→	Register 00H = 01H, register 01H = 02, register 02H = 02H
LD	R0, #LOOP[R1]	→	R0 = 0FFH, R1 = 0AH
LD	#LOOP[R0], R1	→	Register 31H = 0AH, R0 = 01H, R1 = 0AH

LDB — Load Bit

LDB dst, src.b

LDB dst.b, src

Operation: dst (0) ← src (b)

or

dst(b) ← src (0)

The specified bit of the source is loaded into bit zero (LSB) of the destination, or bit zero of the source is loaded into the specified bit of the destination. No other bits of the destination are affected. The source is unaffected.

Flags: No flags are affected.

Format:

			Bytes	Cycles	Opcode (Hex)	Addr Mode dst	Addr Mode src
opc	dst | b | 0	src	3	6	47	r0	Rb
opc	src | b | 1	dst	3	6	47	Rb	r0

NOTE: In the second byte of the instruction formats, the destination (or source) address is four bits, the bit address 'b' is three bits, and the LSB address value is one bit in length.

Examples: Given: R0 = 06H and general register 00H = 05H:

LDB R0, 00H.2 → R0 = 07H, register 00H = 05H

LDB 00H.0, R0 → R0 = 06H, register 00H = 04H

In the first example, destination working register R0 contains the value 06H and the source general register 00H the value 05H. The statement "LD R0, 00H.2" loads the bit two value of the 00H register into bit zero of the R0 register, leaving the value 07H in register R0.

In the second example, 00H is the destination register. The statement "LD 00H.0, R0" loads bit zero of register R0 to the specified bit (bit zero) of the destination register, leaving 04H in general register 00H.

LDC/LDE — Load Memory

LDC/LDE dst, src

Operation: dst ← src

This instruction loads a byte from program or data memory into a working register or vice-versa. The source values are unaffected. LDC refers to program memory and LDE to data memory. The assembler makes 'Irr' or 'rr' values an even number for program memory and odd an odd number for data memory.

Flags: No flags are affected.

Format:

					Bytes	Cycles	Opcode (Hex)	Addr Mode dst	Addr Mode src
1.	opc	dst | src			2	10	C3	r	Irr
2.	opc	src | dst			2	10	D3	Irr	r
3.	opc	dst | src	XS		3	12	E7	r	XS [rr]
4.	opc	src | dst	XS		3	12	F7	XS [rr]	r
5.	opc	dst | src	XL_L	XL_H	4	14	A7	r	XL [rr]
6.	opc	src | dst	XL_L	XL_H	4	14	B7	XL [rr]	r
7.	opc	dst | 0000	DA_L	DA_H	4	14	A7	r	DA
8.	opc	src | 0000	DA_L	DA_H	4	14	B7	DA	r
9.	opc	dst | 0001	DA_L	DA_H	4	14	A7	r	DA
10.	opc	src | 0001	DA_L	DA_H	4	14	B7	DA	r

NOTES:
1. The source (src) or working register pair [rr] for formats 5 and 6 cannot use register pair 0–1.
2. For formats 3 and 4, the destination address 'XS [rr]' and the source address 'XS [rr]' are each one byte.
3. For formats 5 and 6, the destination address 'XL [rr] and the source address 'XL [rr]' are each two bytes.
4. The DA and r source values for formats 7 and 8 are used to address program memory; the second set of values, used in formats 9 and 10, are used to address data memory.

LDC/LDE — Load Memory

LDC/LDE (Continued)

Examples: Given: R0 = 11H, R1 = 34H, R2 = 01H, R3 = 04H; Program memory locations 0103H = 4FH, 0104H = 1A, 0105H = 6DH, and 1104H = 88H. External data memory locations 0103H = 5FH, 0104H = 2AH, 0105H = 7DH, and 1104H = 98H:

```
LDC       R0, @RR2          ;  R0 ← contents of program memory location 0104H
                            ;  R0 = 1AH, R2 = 01H, R3 = 04H
LDE       R0, @RR2          ;  R0 ← contents of external data memory location 0104H
                            ;  R0 = 2AH, R2 = 01H, R3 = 04H
LDC (note) @RR2, R0         ;  11H (contents of R0) is loaded into program memory
                            ;  location 0104H (RR2),
                            ;  working registers R0, R2, R3 → no change
LDE       @RR2, R0          ;  11H (contents of R0) is loaded into external data memory
                            ;  location 0104H (RR2),
                            ;  working registers R0, R2, R3 → no change
LDC       R0, #01H[RR2]     ;  R0 ← contents of program memory location 0105H
                            ;  (01H + RR2),
                            ;  R0 = 6DH, R2 = 01H, R3 = 04H
LDE       R0, #01H[RR2]     ;  R0 ← contents of external data memory location 0105H
                            ;  (01H + RR2), R0 = 7DH, R2 = 01H, R3 = 04H
LDC (note) #01H[RR2], R0    ;  11H (contents of R0) is loaded into program memory location
                            ;  0105H (01H + 0104H)
LDE       #01H[RR2], R0     ;  11H (contents of R0) is loaded into external data memory
                            ;  location 0105H (01H + 0104H)
LDC       R0, #1000H[RR2]   ;  R0 ← contents of program memory location 1104H
                            ;  (1000H + 0104H), R0 = 88H, R2 = 01H, R3 = 04H
LDE       R0, #1000H[RR2]   ;  R0 ← contents of external data memory location 1104H
                            ;  (1000H + 0104H), R0 = 98H, R2 = 01H, R3 = 04H
LDC       R0, 1104H         ;  R0 ← contents of program memory location 1104H, R0 = 88H
LDE       R0, 1104H         ;  R0 ← contents of external data memory location 1104H,
                            ;  R0 = 98H
LDC (note) 1105H, R0        ;  11H (contents of R0) is loaded into program memory location
                            ;  1105H, (1105H) ← 11H
LDE       1105H, R0         ;  11H (contents of R0) is loaded into external data memory
                            ;  location 1105H, (1105H) ← 11H
```

NOTE: These instructions are not supported by masked ROM type devices.

LDCD/LDED — Load Memory and Decrement

LDCD/LDED dst, src

Operation: dst ← src

rr ← rr – 1

These instructions are used for user stacks or block transfers of data from program or data memory to the register file. The address of the memory location is specified by a working register pair. The contents of the source location are loaded into the destination location. The memory address is then decremented. The contents of the source are unaffected.

LDCD references program memory and LDED references external data memory. The assembler makes 'Irr' an even number for program memory and an odd number for data memory.

Flags: No flags are affected.

Format:

		Bytes	Cycles	Opcode (Hex)	Addr Mode dst	src
opc	dst | src	2	10	E2	r	Irr

Examples: Given: R6 = 10H, R7 = 33H, R8 = 12H, program memory location 1033H = 0CDH, and external data memory location 1033H = 0DDH:

```
LDCD    R8, @RR6    ;  0CDH (contents of program memory location 1033H) is loaded
                    ;  into R8 and RR6 is decremented by one
                    ;  R8 = 0CDH, R6 = 10H, R7 = 32H (RR6 ← RR6 – 1)
LDED    R8, @RR6    ;  0DDH (contents of data memory location 1033H) is loaded
                    ;  into R8 and RR6 is decremented by one (RR6 ← RR6 – 1)
                    ;  R8 = 0DDH, R6 = 10H, R7 = 32H
```

LDCI/LDEI — Load Memory and Increment

LDCI/LDEI dst, src

Operation: dst ← src

rr ← rr + 1

These instructions are used for user stacks or block transfers of data from program or data memory to the register file. The address of the memory location is specified by a working register pair. The contents of the source location are loaded into the destination location. The memory address is then incremented automatically. The contents of the source are unaffected.

LDCI refers to program memory and LDEI refers to external data memory. The assembler makes 'Irr' even for program memory and odd for data memory.

Flags: No flags are affected.

Format:

		Bytes	Cycles	Opcode (Hex)	Addr Mode dst	src
opc	dst | src	2	10	E3	r	Irr

Examples: Given: R6 = 10H, R7 = 33H, R8 = 12H, program memory locations 1033H = 0CDH and 1034H = 0C5H; external data memory locations 1033H = 0DDH and 1034H = 0D5H:

```
LDCI    R8, @RR6    ; 0CDH (contents of program memory location 1033H) is loaded
                    ; into R8 and RR6 is incremented by one (RR6 ← RR6 + 1)
                    ; R8 = 0CDH, R6 = 10H, R7 = 34H
LDEI    R8, @RR6    ; 0DDH (contents of data memory location 1033H) is loaded
                    ; into R8 and RR6 is incremented by one (RR6 ← RR6 + 1)
                    ; R8 = 0DDH, R6 = 10H, R7 = 34H
```

LDCPD/LDEPD — Load Memory with Pre-Decrement

LDCPD/

LDEPD dst, src

Operation: rr ← rr – 1

dst ← src

These instructions are used for block transfers of data from program or data memory from the register file. The address of the memory location is specified by a working register pair and is first decremented. The contents of the source location are then loaded into the destination location. The contents of the source are unaffected.

LDCPD refers to program memory and LDEPD refers to external data memory. The assembler makes 'Irr' an even number for program memory and an odd number for external data memory.

Flags: No flags are affected.

Format:

		Bytes	Cycles	Opcode (Hex)	Addr Mode dst	src
opc	src | dst	2	14	F2	Irr	r

Examples: Given: R0 = 77H, R6 = 30H, and R7 = 00H:

```
LDCPD   @RR6, R0    ; (RR6 ← RR6 – 1)
                    ; 77H (contents of R0) is loaded into program memory location
                    ; 2FFFH (3000H – 1H)
                    ; R0 = 77H, R6 = 2FH, R7 = 0FFH
LDEPD   @RR6, R0    ; (RR6 ← RR6 – 1)
                    ; 77H (contents of R0) is loaded into external data memory
                    ; location 2FFFH (3000H – 1H)
                    ; R0 = 77H, R6 = 2FH, R7 = 0FFH
```

LDCPI/LDEPI — Load Memory with Pre-Increment

LDCPI/

LDEPI dst, src

Operation: rr ← rr + 1

dst ← src

These instructions are used for block transfers of data from program or data memory from the register file. The address of the memory location is specified by a working register pair and is first incremented. The contents of the source location are loaded into the destination location. The contents of the source are unaffected.

LDCPI refers to program memory and LDEPI refers to external data memory. The assembler makes 'Irr' an even number for program memory and an odd number for data memory.

Flags: No flags are affected.

Format:

		Bytes	Cycles	Opcode (Hex)	Addr Mode dst	src
opc	src | dst	2	14	F3	Irr	r

Examples: Given: R0 = 7FH, R6 = 21H, and R7 = 0FFH:

```
LDCPI   @RR6, R0    ; (RR6 ← RR6 + 1)
                    ; 7FH (contents of R0) is loaded into program memory
                    ; location 2200H (21FFH + 1H)
                    ; R0 = 7FH, R6 = 22H, R7 = 00H
LDEPI   @RR6, R0    ; (RR6 ← RR6 + 1)
                    ; 7FH (contents of R0) is loaded into external data memory
                    ; location 2200H (21FFH + 1H)
                    ; R0 = 7FH, R6 = 22H, R7 = 00H
```

LDW — Load Word

LDW dst, src

Operation: dst ← src

The contents of the source (a word) are loaded into the destination. The contents of the source are unaffected.

Flags: No flags are affected.

Format:

	Bytes	Cycles	Opcode (Hex)	Addr Mode dst	src
opc | src | dst	3	8	C4	RR	RR
		8	C5	RR	IR
opc | dst | src	4	8	C6	RR	IML

Examples: Given: R4 = 06H, R5 = 1CH, R6 = 05H, R7 = 02H, register 00H = 1AH, register 01H = 02H, register 02H = 03H, and register 03H = 0FH:

LDW	RR6, RR4	→	R6 = 06H, R7 = 1CH, R4 = 06H, R5 = 1CH
LDW	00H, 02H	→	Register 00H = 03H, register 01H = 0FH, register 02H = 03H, register 03H = 0FH
LDW	RR2, @R7	→	R2 = 03H, R3 = 0FH,
LDW	04H, @01H	→	Register 04H = 03H, register 05H = 0FH
LDW	RR6, #1234H	→	R6 = 12H, R7 = 34H
LDW	02H, #0FEDH	→	Register 02H = 0FH, register 03H = 0EDH

In the second example, please note that the statement "LDW 00H, 02H" loads the contents of the source word 02H, 03H into the destination word 00H, 01H. This leaves the value 03H in general register 00H and the value 0FH in register 01H.

The other examples show how to use the LDW instruction with various addressing modes and formats.

MULT — Multiply (Unsigned)

MULT dst, src

Operation: dst ← dst × src

The 8-bit destination operand (even register of the register pair) is multiplied by the source operand (8 bits) and the product (16 bits) is stored in the register pair specified by the destination address. Both operands are treated as unsigned integers.

Flags:
C: Set if result is > 255; cleared otherwise.
Z: Set if the result is "0"; cleared otherwise.
S: Set if MSB of the result is a "1"; cleared otherwise.
V: Cleared.
D: Unaffected.
H: Unaffected.

Format:

			Bytes	Cycles	Opcode (Hex)	Addr Mode dst	Addr Mode src
opc	src	dst	3	22	84	RR	R
				22	85	RR	IR
				22	86	RR	IM

Examples: Given: Register 00H = 20H, register 01H = 03H, register 02H = 09H, register 03H = 06H:

MULT 00H, 02H → Register 00H = 01H, register 01H = 20H, register 02H = 09H
MULT 00H, @01H → Register 00H = 00H, register 01H = 0C0H
MULT 00H, #30H → Register 00H = 06H, register 01H = 00H

In the first example, the statement "MULT 00H, 02H" multiplies the 8-bit destination operand (in the register 00H of the register pair 00H, 01H) by the source register 02H operand (09H). The 16-bit product, 0120H, is stored in the register pair 00H, 01H.

NEXT — Next

NEXT

Operation: PC ← @ IP

IP ← IP + 2

The NEXT instruction is useful when implementing threaded-code languages. The program memory word that is pointed to by the instruction pointer is loaded into the program counter. The instruction pointer is then incremented by two.

Flags: No flags are affected.

Format:

	Bytes	Cycles	Opcode (Hex)
opc	1	10	0F

Example: The following diagram shows one example of how to use the NEXT instruction.

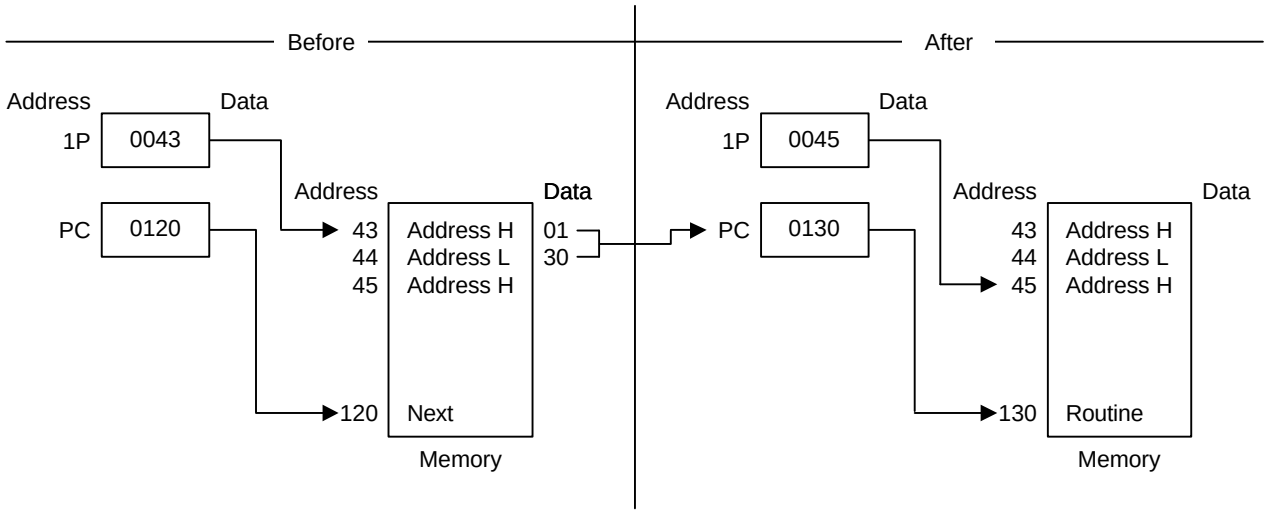

NOP — No Operation

NOP

Operation: No action is performed when the CPU executes this instruction. Typically, one or more NOPs are executed in sequence in order to effect a timing delay of variable duration.

Flags: No flags are affected.

Format:

	Bytes	Cycles	Opcode (Hex)
opc	1	4	FF

Example: When the instruction

NOP

is encountered in a program, no operation occurs. Instead, there is a delay in instruction execution time.

OR — Logical OR

OR dst, src

Operation: dst ← dst OR src

The source operand is logically ORed with the destination operand and the result is stored in the destination. The contents of the source are unaffected. The OR operation results in a "1" being stored whenever either of the corresponding bits in the two operands is a "1"; otherwise a "0" is stored.

Flags:
C: Unaffected.
Z: Set if the result is "0"; cleared otherwise.
S: Set if the result bit 7 is set; cleared otherwise.
V: Always cleared to "0".
D: Unaffected.
H: Unaffected.

Format:

	Bytes	Cycles	Opcode (Hex)	Addr Mode dst	src
opc | dst | src	2	4	42	r	r
		6	43	r	lr
opc | src | dst	3	6	44	R	R
		6	45	R	IR
opc | dst | src	3	6	46	R	IM

Examples: Given: R0 = 15H, R1 = 2AH, R2 = 01H, register 00H = 08H, register 01H = 37H, and register 08H = 8AH:

OR R0, R1 → R0 = 3FH, R1 = 2AH
OR R0, @R2 → R0 = 37H, R2 = 01H, register 01H = 37H
OR 00H, 01H → Register 00H = 3FH, register 01H = 37H
OR 01H, @00H → Register 00H = 08H, register 01H = 0BFH
OR 00H, #02H → Register 00H = 0AH

In the first example, if working register R0 contains the value 15H and register R1 the value 2AH, the statement "OR R0, R1" logical-ORs the R0 and R1 register contents and stores the result (3FH) in destination register R0.

The other examples show the use of the logical OR instruction with the various addressing modes and formats.

POP — Pop From Stack

POP dst

Operation: dst ← @SP

SP ← SP + 1

The contents of the location addressed by the stack pointer are loaded into the destination. The stack pointer is then incremented by one.

Flags: No flags affected.

Format:

opc	dst

Bytes	Cycles	Opcode (Hex)	Addr Mode dst
2	8	50	R
	8	51	IR

Examples: Given: Register 00H = 01H, register 01H = 1BH, SPH (0D8H) = 00H, SPL (0D9H) = 0FBH, and stack register 0FBH = 55H:

POP 00H → Register 00H = 55H, SP = 00FCH

POP @00H → Register 00H = 01H, register 01H = 55H, SP = 00FCH

In the first example, general register 00H contains the value 01H. The statement "POP 00H" loads the contents of location 00FBH (55H) into destination register 00H and then increments the stack pointer by one. Register 00H then contains the value 55H and the SP points to location 00FCH.

POPUD — Pop User Stack (Decrementing)

POPUD dst, src

Operation: dst ← src

IR ← IR – 1

This instruction is used for user-defined stacks in the register file. The contents of the register file location addressed by the user stack pointer are loaded into the destination. The user stack pointer is then decremented.

Flags: No flags are affected.

Format:

			Bytes	Cycles	Opcode (Hex)	Addr Mode dst	Addr Mode src
opc	src	dst	3	8	92	R	IR

Example: Given: Register 00H = 42H (user stack pointer register), register 42H = 6FH, and register 02H = 70H:

POPUD 02H, @00H → Register 00H = 41H, register 02H = 6FH, register 42H = 6FH

If general register 00H contains the value 42H and register 42H the value 6FH, the statement "POPUD 02H, @00H" loads the contents of register 42H into the destination register 02H. The user stack pointer is then decremented by one, leaving the value 41H.

POPUI — Pop User Stack (Incrementing)

POPUI dst, src

Operation: dst ← src

IR ← IR + 1

The POPUI instruction is used for user-defined stacks in the register file. The contents of the register file location addressed by the user stack pointer are loaded into the destination. The user stack pointer is then incremented.

Flags: No flags are affected.

Format:

			Bytes	Cycles	Opcode (Hex)	Addr Mode dst	Addr Mode src
opc	src	dst	3	8	93	R	IR

Example: Given: Register 00H = 01H and register 01H = 70H:

POPUI 02H, @00H → Register 00H = 02H, register 01H = 70H, register 02H = 70H

If general register 00H contains the value 01H and register 01H the value 70H, the statement "POPUI 02H, @00H" loads the value 70H into the destination general register 02H. The user stack pointer (register 00H) is then incremented by one, changing its value from 01H to 02H.

PUSH — Push To Stack

PUSH src

Operation: SP ← SP – 1

@SP ← src

A PUSH instruction decrements the stack pointer value and loads the contents of the source (src) into the location addressed by the decremented stack pointer. The operation then adds the new value to the top of the stack.

Flags: No flags are affected.

Format:

	Bytes	Cycles	Opcode (Hex)	Addr Mode dst
opc | src	2	8 (internal clock)	70	R
		8 (external clock)		
		8 (internal clock)		
		8 (external clock)	71	IR

Examples: Given: Register 40H = 4FH, register 4FH = 0AAH, SPH = 00H, and SPL = 00H:

PUSH 40H → Register 40H = 4FH, stack register 0FFH = 4FH, SPH = 0FFH, SPL = 0FFH

PUSH @40H → Register 40H = 4FH, register 4FH = 0AAH, stack register 0FFH = 0AAH, SPH = 0FFH, SPL = 0FFH

In the first example, if the stack pointer contains the value 0000H, and general register 40H the value 4FH, the statement "PUSH 40H" decrements the stack pointer from 0000 to 0FFFFH. It then loads the contents of register 40H into location 0FFFFH and adds this new value to the top of the stack.

PUSHUD — Push User Stack (Decrementing)

PUSHUD dst, src

Operation: IR ← IR – 1

dst ← src

This instruction is used to address user-defined stacks in the register file. PUSHUD decrements the user stack pointer and loads the contents of the source into the register addressed by the decremented stack pointer.

Flags: No flags are affected.

Format:

			Bytes	Cycles	Opcode (Hex)	Addr Mode dst	src
opc	dst	src	3	8	82	IR	R

Example: Given: Register 00H = 03H, register 01H = 05H, and register 02H = 1AH:

PUSHUD @00H, 01H → Register 00H = 02H, register 01H = 05H, register 02H = 05H

If the user stack pointer (register 00H, for example) contains the value 03H, the statement "PUSHUD @00H, 01H" decrements the user stack pointer by one, leaving the value 02H. The 01H register value, 05H, is then loaded into the register addressed by the decremented user stack pointer.

PUSHUI — Push User Stack (Incrementing)

PUSHUI dst, src

Operation: IR ← IR + 1

dst ← src

This instruction is used for user-defined stacks in the register file. PUSHUI increments the user stack pointer and then loads the contents of the source into the register location addressed by the incremented user stack pointer.

Flags: No flags are affected.

Format:

			Bytes	Cycles	Opcode (Hex)	Addr Mode dst	Addr Mode src
opc	dst	src	3	8	83	IR	R

Example: Given: Register 00H = 03H, register 01H = 05H, and register 04H = 2AH:

PUSHUI @00H, 01H → Register 00H = 04H, register 01H = 05H, register 04H = 05H

If the user stack pointer (register 00H, for example) contains the value 03H, the statement "PUSHUI @00H, 01H" increments the user stack pointer by one, leaving the value 04H. The 01H register value, 05H, is then loaded into the location addressed by the incremented user stack pointer.

RCF — Reset Carry Flag

RCF RCF

Operation: C ← 0

The carry flag is cleared to logic zero, regardless of its previous value.

Flags: **C:** Cleared to "0".

No other flags are affected.

Format:

	Bytes	Cycles	Opcode (Hex)
opc	1	4	CF

Example: Given: C = "1" or "0":

The instruction RCF clears the carry flag (C) to logic zero.

RET — Return

RET

Operation: PC ← @SP

SP ← SP + 2

The RET instruction is normally used to return to the previously executing procedure at the end of a procedure entered by a CALL instruction. The contents of the location addressed by the stack pointer are popped into the program counter. The next statement that is executed is the one that is addressed by the new program counter value.

Flags: No flags are affected.

Format:

	Bytes	Cycles	Opcode (Hex)
opc	1	8 (internal stack) 10 (internal stack)	AF

Example: Given: SP = 00FCH, (SP) = 101AH, and PC = 1234:

RET → PC = 101AH, SP = 00FEH

The statement "RET" pops the contents of stack pointer location 00FCH (10H) into the high byte of the program counter. The stack pointer then pops the value in location 00FEH (1AH) into the PC's low byte and the instruction at location 101AH is executed. The stack pointer now points to memory location 00FEH.

RL — Rotate Left

RL dst

Operation: C ← dst (7)

dst (0) ← dst (7)

dst (n + 1) ← dst (n), n = 0–6

The contents of the destination operand are rotated left one bit position. The initial value of bit 7 is moved to the bit zero (LSB) position and also replaces the carry flag.

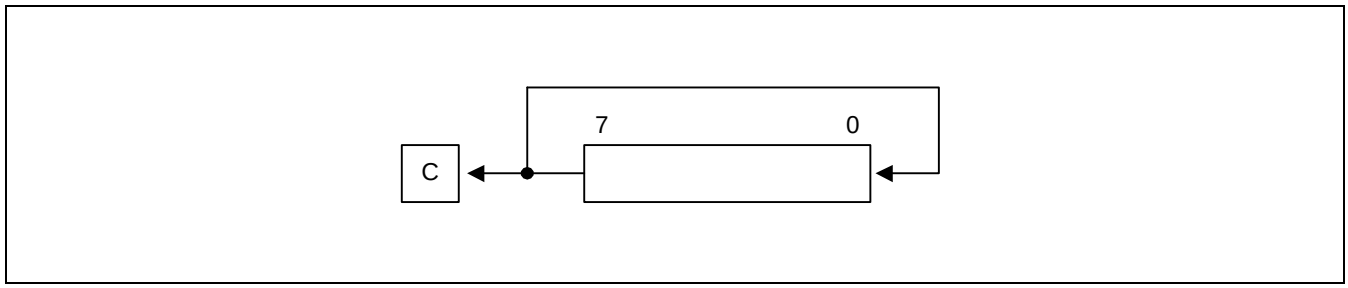

Flags:
C: Set if the bit rotated from the most significant bit position (bit 7) was "1".
Z: Set if the result is "0"; cleared otherwise.
S: Set if the result bit 7 is set; cleared otherwise.
V: Set if arithmetic overflow occurred; cleared otherwise.
D: Unaffected.
H: Unaffected.

Format:

opc	dst

Bytes	Cycles	Opcode (Hex)	Addr Mode dst
2	4	90	R
	4	91	IR

Examples: Given: Register 00H = 0AAH, register 01H = 02H and register 02H = 17H:

RL 00H → Register 00H = 55H, C = "1"

RL @01H → Register 01H = 02H, register 02H = 2EH, C = "0"

In the first example, if general register 00H contains the value 0AAH (10101010B), the statement "RL 00H" rotates the 0AAH value left one bit position, leaving the new value 55H (01010101B) and setting the carry and overflow flags.

RLC — Rotate Left Through Carry

RLC dst

Operation: dst (0) ← C

C ← dst (7)

dst (n + 1) ← dst (n), n = 0–6

The contents of the destination operand with the carry flag are rotated left one bit position. The initial value of bit 7 replaces the carry flag (C); the initial value of the carry flag replaces bit zero.

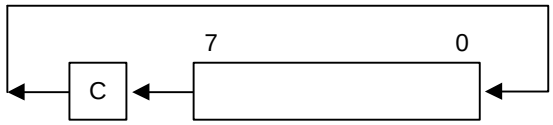

Flags:
C: Set if the bit rotated from the most significant bit position (bit 7) was "1".
Z: Set if the result is "0"; cleared otherwise.
S: Set if the result bit 7 is set; cleared otherwise.
V: Set if arithmetic overflow occurred, that is, if the sign of the destination changed during rotation; cleared otherwise.
D: Unaffected.
H: Unaffected.

Format:

	Bytes	Cycles	Opcode (Hex)	Addr Mode dst
opc dst	2	4	10	R
		4	11	IR

Examples: Given: Register 00H = 0AAH, register 01H = 02H, and register 02H = 17H, C = "0":

RLC 00H → Register 00H = 54H, C = "1"
RLC @01H → Register 01H = 02H, register 02H = 2EH, C = "0"

In the first example, if general register 00H has the value 0AAH (10101010B), the statement "RLC 00H" rotates 0AAH one bit position to the left. The initial value of bit 7 sets the carry flag and the initial value of the C flag replaces bit zero of register 00H, leaving the value 55H (01010101B). The MSB of register 00H resets the carry flag to "1" and sets the overflow flag.

RR — Rotate Right

RR dst

Operation: C ← dst (0)

dst (7) ← dst (0)

dst (n) ← dst (n + 1), n = 0–6

The contents of the destination operand are rotated right one bit position. The initial value of bit zero (LSB) is moved to bit 7 (MSB) and also replaces the carry flag (C).

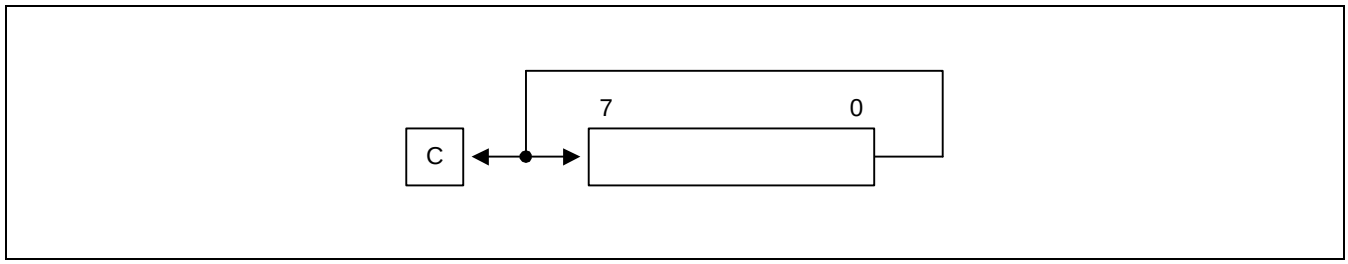

Flags:
C: Set if the bit rotated from the least significant bit position (bit zero) was "1".
Z: Set if the result is "0"; cleared otherwise.
S: Set if the result bit 7 is set; cleared otherwise.
V: Set if arithmetic overflow occurred, that is, if the sign of the destination changed during rotation; cleared otherwise.
D: Unaffected.
H: Unaffected.

Format:

	Bytes	Cycles	Opcode (Hex)	Addr Mode dst
opc dst	2	4	E0	R
		4	E1	IR

Examples: Given: Register 00H = 31H, register 01H = 02H, and register 02H = 17H:

RR 00H → Register 00H = 98H, C = "1"

RR @01H → Register 01H = 02H, register 02H = 8BH, C = "1"

In the first example, if general register 00H contains the value 31H (00110001B), the statement "RR 00H" rotates this value one bit position to the right. The initial value of bit zero is moved to bit 7, leaving the new value 98H (10011000B) in the destination register. The initial bit zero also resets the C flag to "1" and the sign flag and overflow flag are also set to "1".

RRC — Rotate Right Through Carry

RRC dst

Operation: dst (7) ← C

C ← dst (0)

dst (n) ← dst (n + 1), n = 0–6

The contents of the destination operand and the carry flag are rotated right one bit position. The initial value of bit zero (LSB) replaces the carry flag; the initial value of the carry flag replaces bit 7 (MSB).

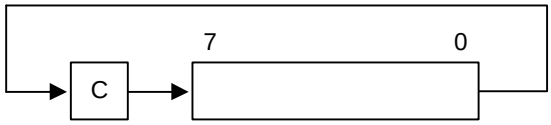

Flags:
C: Set if the bit rotated from the least significant bit position (bit zero) was "1".
Z: Set if the result is "0" cleared otherwise.
S: Set if the result bit 7 is set; cleared otherwise.
V: Set if arithmetic overflow occurred, that is, if the sign of the destination changed during rotation; cleared otherwise.
D: Unaffected.
H: Unaffected.

Format:

	Bytes	Cycles	Opcode (Hex)	Addr Mode dst
opc dst	2	4	C0	R
		4	C1	IR

Examples: Given: Register 00H = 55H, register 01H = 02H, register 02H = 17H, and C = "0":

RRC 00H → Register 00H = 2AH, C = "1"

RRC @01H → Register 01H = 02H, register 02H = 0BH, C = "1"

In the first example, if general register 00H contains the value 55H (01010101B), the statement "RRC 00H" rotates this value one bit position to the right. The initial value of bit zero ("1") replaces the carry flag and the initial value of the C flag ("1") replaces bit 7. This leaves the new value 2AH (00101010B) in destination register 00H. The sign flag and overflow flag are both cleared to "0".

SB0 — Select Bank 0

SB0

Operation: BANK ← 0

The SB0 instruction clears the bank address flag in the FLAGS register (FLAGS.0) to logic zero, selecting bank 0 register addressing in the set 1 area of the register file.

Flags: No flags are affected.

Format:

	Bytes	Cycles	Opcode (Hex)
opc	1	4	4F

Example: The statement

SB0

clears FLAGS.0 to "0", selecting bank 0 register addressing.

SB1 — Select Bank 1

SB1

Operation: BANK ← 1

The SB1 instruction sets the bank address flag in the FLAGS register (FLAGS.0) to logic one, selecting bank 1 register addressing in the set 1 area of the register file. (Bank 1 is not implemented in some KS88-series microcontrollers.)

Flags: No flags are affected.

Format:

	Bytes	Cycles	Opcode (Hex)
opc	1	4	5F

Example: The statement

SB1

sets FLAGS.0 to "1", selecting bank 1 register addressing, if implemented.

SBC — Subtract With Carry

SBC dst, src

Operation: dst ← dst – src – c

The source operand, along with the current value of the carry flag, is subtracted from the destination operand and the result is stored in the destination. The contents of the source are unaffected. Subtraction is performed by adding the two's-complement of the source operand to the destination operand. In multiple precision arithmetic, this instruction permits the carry ("borrow") from the subtraction of the low-order operands to be subtracted from the subtraction of high-order operands.

Flags:
- **C:** Set if a borrow occurred (src > dst); cleared otherwise.
- **Z:** Set if the result is "0"; cleared otherwise.
- **S:** Set if the result is negative; cleared otherwise.
- **V:** Set if arithmetic overflow occurred, that is, if the operands were of opposite sign and the sign of the result is the same as the sign of the source; cleared otherwise.
- **D:** Always set to "1".
- **H:** Cleared if there is a carry from the most significant bit of the low-order four bits of the result; set otherwise, indicating a "borrow".

Format:

	Bytes	Cycles	Opcode (Hex)	Addr Mode dst	Addr Mode src
opc | dst | src	2	4	32	r	r
		6	33	r	lr
opc | src | dst	3	6	34	R	R
		6	35	R	IR
opc | dst | src	3	6	36	R	IM

Examples: Given: R1 = 10H, R2 = 03H, C = "1", register 01H = 20H, register 02H = 03H, and register 03H = 0AH:

SBC R1, R2 → R1 = 0CH, R2 = 03H

SBC R1, @R2 → R1 = 05H, R2 = 03H, register 03H = 0AH

SBC 01H, 02H → Register 01H = 1CH, register 02H = 03H

SBC 01H, @02H → Register 01H = 15H, register 02H = 03H, register 03H = 0AH

SBC 01H, #8AH → Register 01H = 95H; C, S, and V = "1"

In the first example, if working register R1 contains the value 10H and register R2 the value 03H, the statement "SBC R1, R2" subtracts the source value (03H) and the C flag value ("1") from the destination (10H) and then stores the result (0CH) in register R1.

SCF — Set Carry Flag

SCF

Operation: C ← 1

The carry flag (C) is set to logic one, regardless of its previous value.

Flags: **C:** Set to "1".

No other flags are affected.

Format:

	Bytes	Cycles	Opcode (Hex)
opc	1	4	DF

Example: The statement

SCF

sets the carry flag to logic one.

SRA — Shift Right Arithmetic

SRA dst

Operation: dst (7) ← dst (7)

C ← dst (0)

dst (n) ← dst (n + 1), n = 0–6

An arithmetic shift-right of one bit position is performed on the destination operand. Bit zero (the LSB) replaces the carry flag. The value of bit 7 (the sign bit) is unchanged and is shifted into bit position 6.

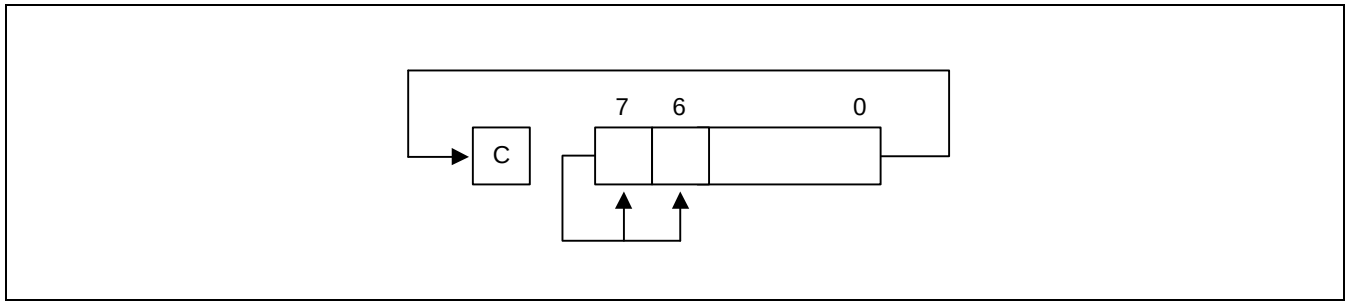

Flags:
C: Set if the bit shifted from the LSB position (bit zero) was "1".
Z: Set if the result is "0"; cleared otherwise.
S: Set if the result is negative; cleared otherwise.
V: Always cleared to "0".
D: Unaffected.
H: Unaffected.

Format:

opc	dst

Bytes	Cycles	Opcode (Hex)	Addr Mode dst
2	4	D0	R
	4	D1	IR

Examples: Given: Register 00H = 9AH, register 02H = 03H, register 03H = 0BCH, and C = "1":

SRA 00H → Register 00H = 0CD, C = "0"

SRA @02H → Register 02H = 03H, register 03H = 0DEH, C = "0"

In the first example, if general register 00H contains the value 9AH (10011010B), the statement "SRA 00H" shifts the bit values in register 00H right one bit position. Bit zero ("0") clears the C flag and bit 7 ("1") is then shifted into the bit 6 position (bit 7 remains unchanged). This leaves the value 0CDH (11001101B) in destination register 00H.

SRP/SRP0/SRP1 — Set Register Pointer

SRP src

SRP0 src

SRP1 src

Operation:

If src (1) = 1 and src (0) = 0 then:	RP0 (3–7)	←	src (3–7)	
If src (1) = 0 and src (0) = 1 then:	RP1 (3–7)	←	src (3–7)	
If src (1) = 0 and src (0) = 0 then:	RP0 (4–7)	←	src (4–7),	
	RP0 (3)	←	0	
	RP1 (4–7)	←	src (4–7),	
	RP1 (3)	←	1	

The source data bits one and zero (LSB) determine whether to write one or both of the register pointers, RP0 and RP1. Bits 3–7 of the selected register pointer are written unless both register pointers are selected. RP0.3 is then cleared to logic zero and RP1.3 is set to logic one.

Flags: No flags are affected.

Format:

		Bytes	Cycles	Opcode (Hex)	Addr Mode src
opc	src	2	4	31	IM

Examples: The statement

SRP #40H

sets register pointer 0 (RP0) at location 0D6H to 40H and register pointer 1 (RP1) at location 0D7H to 48H.

The statement "SRP0 #50H" sets RP0 to 50H, and the statement "SRP1 #68H" sets RP1 to 68H.

STOP — Stop Operation

STOP

Operation:

The STOP instruction stops the both the CPU clock and system clock and causes the microcontroller to enter Stop mode. During Stop mode, the contents of on-chip CPU registers, peripheral registers, and I/O port control and data registers are retained. Stop mode can be released by an external reset operation or by external interrupts. For the reset operation, the RESET pin must be held to Low level until the required oscillation stabilization interval has elapsed.

Flags: No flags are affected.

Format:

	Bytes	Cycles	Opcode (Hex)	Addr Mode dst	src
opc	1	4	7F	–	–

Example: The statement

STOP

halts all microcontroller operations.

SUB — Subtract

SUB dst, src

Operation: dst ← dst – src

The source operand is subtracted from the destination operand and the result is stored in the destination. The contents of the source are unaffected. Subtraction is performed by adding the two's complement of the source operand to the destination operand.

Flags:
- **C:** Set if a "borrow" occurred; cleared otherwise.
- **Z:** Set if the result is "0"; cleared otherwise.
- **S:** Set if the result is negative; cleared otherwise.
- **V:** Set if arithmetic overflow occurred, that is, if the operands were of opposite signs and the sign of the result is of the same as the sign of the source operand; cleared otherwise.
- **D:** Always set to "1".
- **H:** Cleared if there is a carry from the most significant bit of the low-order four bits of the result; set otherwise indicating a "borrow".

Format:

	Bytes	Cycles	Opcode (Hex)	Addr Mode dst	Addr Mode src
opc | dst | src	2	4	22	r	r
		6	23	r	lr
opc | src | dst	3	6	24	R	R
		6	25	R	IR
opc | dst | src	3	6	26	R	IM

Examples: Given: R1 = 12H, R2 = 03H, register 01H = 21H, register 02H = 03H, register 03H = 0AH:

SUB	R1, R2	→	R1 = 0FH, R2 = 03H
SUB	R1, @R2	→	R1 = 08H, R2 = 03H
SUB	01H, 02H	→	Register 01H = 1EH, register 02H = 03H
SUB	01H, @02H	→	Register 01H = 17H, register 02H = 03H
SUB	01H, #90H	→	Register 01H = 91H; C, S, and V = "1"
SUB	01H, #65H	→	Register 01H = 0BCH; C and S = "1", V = "0"

In the first example, if working register R1 contains the value 12H and if register R2 contains the value 03H, the statement "SUB R1, R2" subtracts the source value (03H) from the destination value (12H) and stores the result (0FH) in destination register R1.

SWAP — Swap Nibbles

SWAP dst

Operation: dst (0 – 3) ↔ dst (4 – 7)

The contents of the lower four bits and upper four bits of the destination operand are swapped.

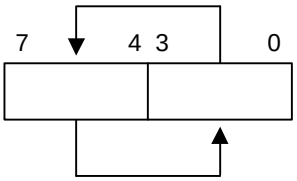

Flags:
C: Undefined.
Z: Set if the result is "0"; cleared otherwise.
S: Set if the result bit 7 is set; cleared otherwise.
V: Undefined.
D: Unaffected.
H: Unaffected.

Format:

	Bytes	Cycles	Opcode (Hex)	Addr Mode dst
opc dst	2	4	F0	R
		4	F1	IR

Examples: Given: Register 00H = 3EH, register 02H = 03H, and register 03H = 0A4H:

SWAP 00H → Register 00H = 0E3H
SWAP @02H → Register 02H = 03H, register 03H = 4AH

In the first example, if general register 00H contains the value 3EH (00111110B), the statement "SWAP 00H" swaps the lower and upper four bits (nibbles) in the 00H register, leaving the value 0E3H (11100011B).

TCM — Test Complement Under Mask

TCM dst, src

Operation: (NOT dst) AND src

This instruction tests selected bits in the destination operand for a logic one value. The bits to be tested are specified by setting a "1" bit in the corresponding position of the source operand (mask). The TCM statement complements the destination operand, which is then ANDed with the source mask. The zero (Z) flag can then be checked to determine the result. The destination and source operands are unaffected.

Flags:
C: Unaffected.
Z: Set if the result is "0"; cleared otherwise.
S: Set if the result bit 7 is set; cleared otherwise.
V: Always cleared to "0".
D: Unaffected.
H: Unaffected.

Format:

			Bytes	Cycles	Opcode (Hex)	Addr Mode dst	Addr Mode src
opc	dst | src		2	4	62	r	r
				6	63	r	lr
opc	src	dst	3	6	64	R	R
				6	65	R	IR
opc	dst	src	3	6	66	R	IM

Examples: Given: R0 = 0C7H, R1 = 02H, R2 = 12H, register 00H = 2BH, register 01H = 02H, and register 02H = 23H:

TCM R0, R1 → R0 = 0C7H, R1 = 02H, Z = "1"
TCM R0, @R1 → R0 = 0C7H, R1 = 02H, register 02H = 23H, Z = "0"
TCM 00H, 01H → Register 00H = 2BH, register 01H = 02H, Z = "1"
TCM 00H, @01H → Register 00H = 2BH, register 01H = 02H, register 02H = 23H, Z = "1"
TCM 00H, #34 → Register 00H = 2BH, Z = "0"

In the first example, if working register R0 contains the value 0C7H (11000111B) and register R1 the value 02H (00000010B), the statement "TCM R0, R1" tests bit one in the destination register for a "1" value. Because the mask value corresponds to the test bit, the Z flag is set to logic one and can be tested to determine the result of the TCM operation.

TM — Test Under Mask

TM dst, src

Operation: dst AND src

This instruction tests selected bits in the destination operand for a logic zero value. The bits to be tested are specified by setting a "1" bit in the corresponding position of the source operand (mask), which is ANDed with the destination operand. The zero (Z) flag can then be checked to determine the result. The destination and source operands are unaffected.

Flags:
C: Unaffected.
Z: Set if the result is "0"; cleared otherwise.
S: Set if the result bit 7 is set; cleared otherwise.
V: Always reset to "0".
D: Unaffected.
H: Unaffected.

Format:

	Bytes	Cycles	Opcode (Hex)	Addr Mode dst	Addr Mode src
opc | dst | src	2	4	72	r	r
		6	73	r	lr
opc | src | dst	3	6	74	R	R
		6	75	R	IR
opc | dst | src	3	6	76	R	IM

Examples: Given: R0 = 0C7H, R1 = 02H, R2 = 18H, register 00H = 2BH, register 01H = 02H, and register 02H = 23H:

TM	R0, R1	→	R0 = 0C7H, R1 = 02H, Z = "0"
TM	R0, @R1	→	R0 = 0C7H, R1 = 02H, register 02H = 23H, Z = "0"
TM	00H, 01H	→	Register 00H = 2BH, register 01H = 02H, Z = "0"
TM	00H, @01H	→	Register 00H = 2BH, register 01H = 02H, register 02H = 23H, Z = "0"
TM	00H, #54H	→	Register 00H = 2BH, Z = "1"

In the first example, if working register R0 contains the value 0C7H (11000111B) and register R1 the value 02H (00000010B), the statement "TM R0, R1" tests bit one in the destination register for a "0" value. Because the mask value does not match the test bit, the Z flag is cleared to logic zero and can be tested to determine the result of the TM operation.

WFI — Wait For Interrupt

WFI

Operation:

The CPU is effectively halted until an interrupt occurs, except that DMA transfers can still take place during this wait state. The WFI status can be released by an internal interrupt, including a fast interrupt .

Flags: No flags are affected.

Format:

	Bytes	Cycles	Opcode (Hex)
opc	1	4n	3F
		(n = 1, 2, 3, …)	

Example: The following sample program structure shows the sequence of operations that follow a "WFI" statement:

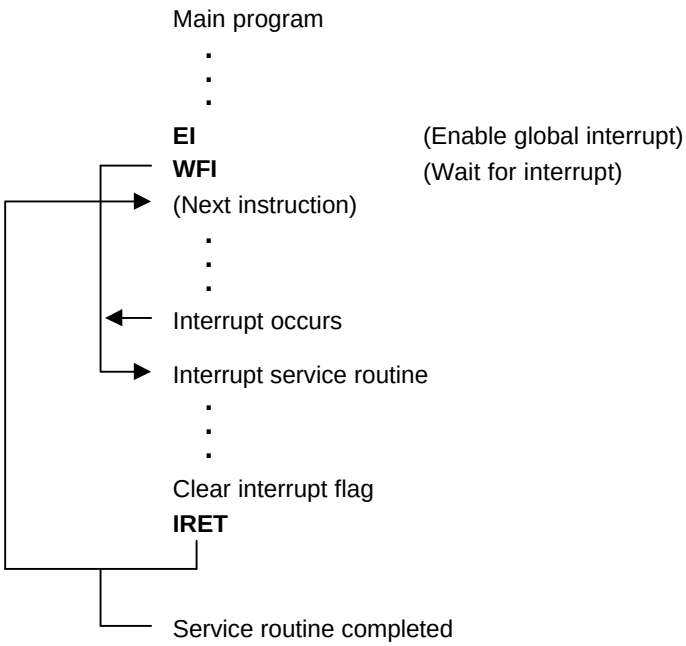

XOR — Logical Exclusive OR

XOR dst, src

Operation: dst ← dst XOR src

The source operand is logically exclusive-ORed with the destination operand and the result is stored in the destination. The exclusive-OR operation results in a "1" bit being stored whenever the corresponding bits in the operands are different; otherwise, a "0" bit is stored.

Flags:
C: Unaffected.
Z: Set if the result is "0"; cleared otherwise.
S: Set if the result bit 7 is set; cleared otherwise.
V: Always reset to "0".
D: Unaffected.
H: Unaffected.

Format:

			Bytes	Cycles	Opcode (Hex)	Addr Mode dst	Addr Mode src
opc	dst | src		2	4	B2	r	r
				6	B3	r	lr
opc	src	dst	3	6	B4	R	R
				6	B5	R	IR
opc	dst	src	3	6	B6	R	IM

Examples: Given: R0 = 0C7H, R1 = 02H, R2 = 18H, register 00H = 2BH, register 01H = 02H, and register 02H = 23H:

XOR R0, R1 → R0 = 0C5H, R1 = 02H
XOR R0, @R1 → R0 = 0E4H, R1 = 02H, register 02H = 23H
XOR 00H, 01H → Register 00H = 29H, register 01H = 02H
XOR 00H, @01H → Register 00H = 08H, register 01H = 02H, register 02H = 23H
XOR 00H, #54H → Register 00H = 7FH

In the first example, if working register R0 contains the value 0C7H and if register R1 contains the value 02H, the statement "XOR R0, R1" logically exclusive-ORs the R1 value with the R0 value and stores the result (0C5H) in the destination register R0.

NOTES

7 CLOCK CIRCUITS

OVERVIEW

The S3C852B microcontroller has two oscillator circuits: a main system clock, and a subsystem clock circuit. The CPU and peripheral hardware operate on the system clock frequency supplied through these circuits. The maximum CPU clock frequency, is determined by CLKCON register settings.

SYSTEM CLOCK CIRCUIT

The system clock circuit has the following components:

— External crystal source (main clock only), or an external clock

— Programmable frequency divider for the CPU clock (fx divided by 1, 2, 8, or 16 or fxt)

— Clock circuit control register, CLKCON

— Oscillator control register, OSCCON

— Main clock control flag, MCLKSEL

— Phase locked loop for generating fx (3.579545 MHz) from fxt (32.768 kHz) and generating fx*2 (7.159090 MHz)

CPU Clock Notation

In this document, the following notation is used for descriptions of the CPU clock:

fx main clock

fxt sub clock

fxx selected system clock

MAIN OSCILLATOR CIRCUITS

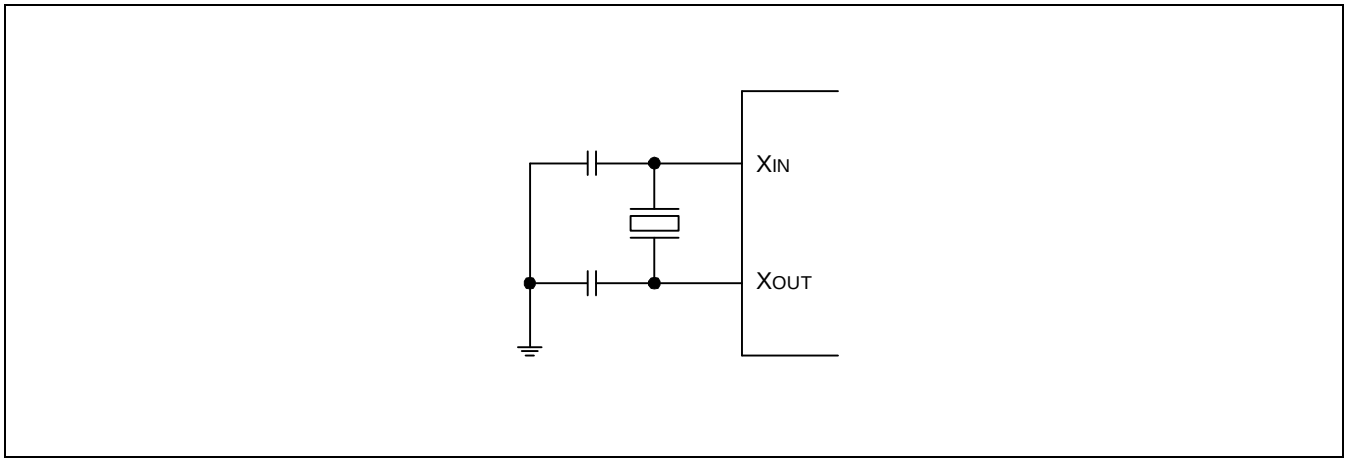

Figure 7-1. Crystal Oscillator

SUB OSCILLATOR CIRCUITS

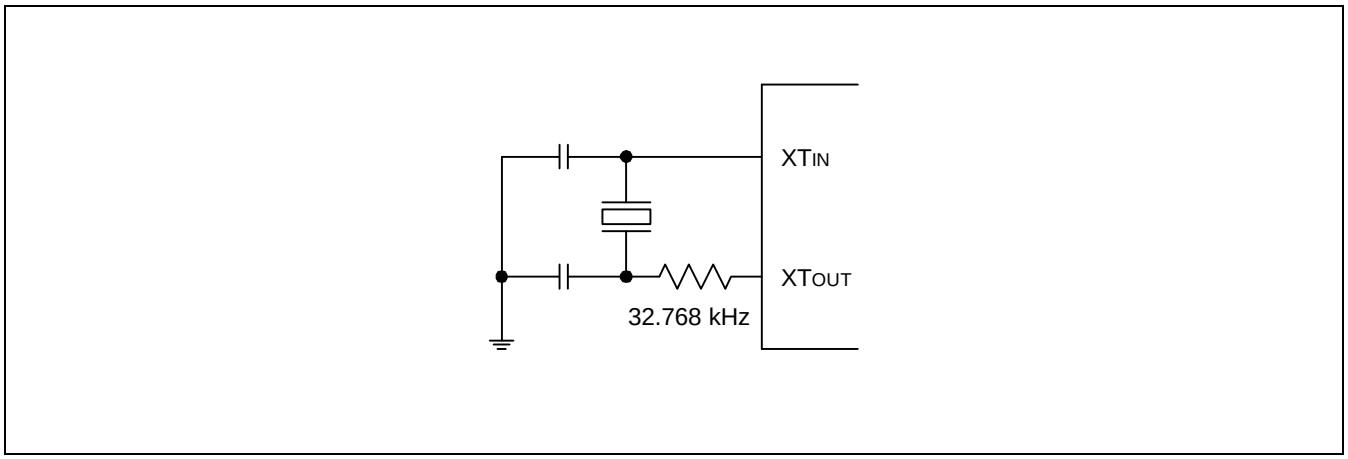

Figure 7-2. Crystal Oscillator

CLOCK STATUS DURING POWER-DOWN MODES

Stop mode affect the system clock as follows:

— In Stop mode, the main oscillator is halted. Stop mode is released, and the oscillator started, by a reset operation, by an external interrupt, or by a watch timer interrupt if sub clock is selected as watch timer clock source (When the fx is selected as system clock).

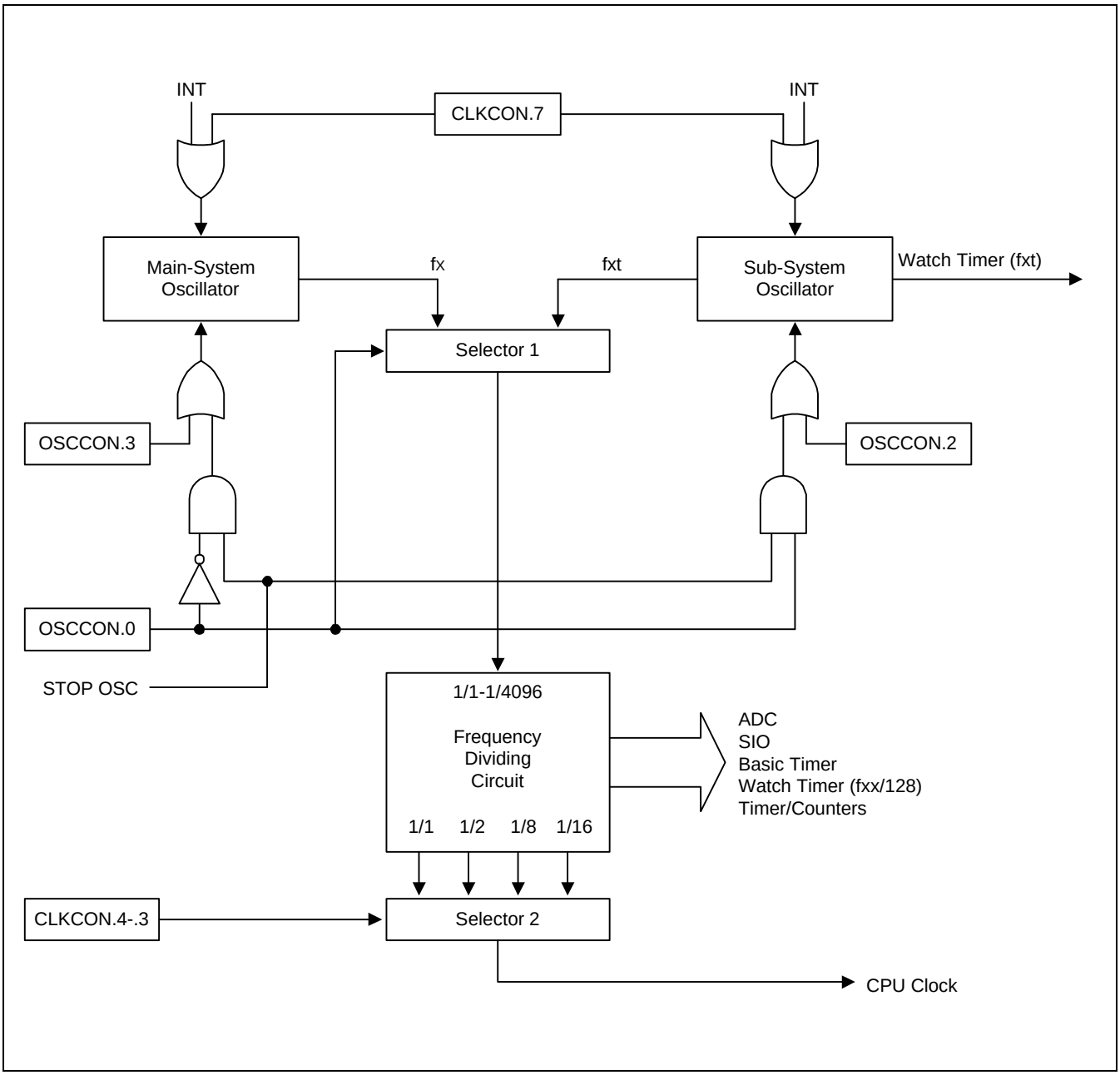

Figure 7-3. System Clock Circuit Diagram

SYSTEM CLOCK CONTROL REGISTER (CLKCON)

The system clock control register, CLKCON, is located in set 1, address D4H. It is read/write addressable and has the following functions:

— Oscillator IRQ wake-up function enable/disable

— Oscillator frequency divide-by value

CLKCON register settings control whether or not an external interrupt can be used to trigger a Stop mode release (This is called the “IRQ wake-up” function). The IRQ “wake-up” enable bit is CLKCON.7.

After a reset, the external interrupt oscillator wake-up function is enabled, the main oscillator is activated, and the fx/16 (the slowest clock speed) is selected as the CPU clock. If necessary, you can then increase the CPU clock speed to fx, fx/2, or fx/8 by setting the CLKCON, and you can change system clock from main clock to sub clock by setting the OSCCON.

For the S3C852B microcontroller, the CLKCON.2–CLKCON.0 system clock signature code can be any value (The “101B” setting selects sub clock as system clock). The reset value for the clock signature code is “000B”.

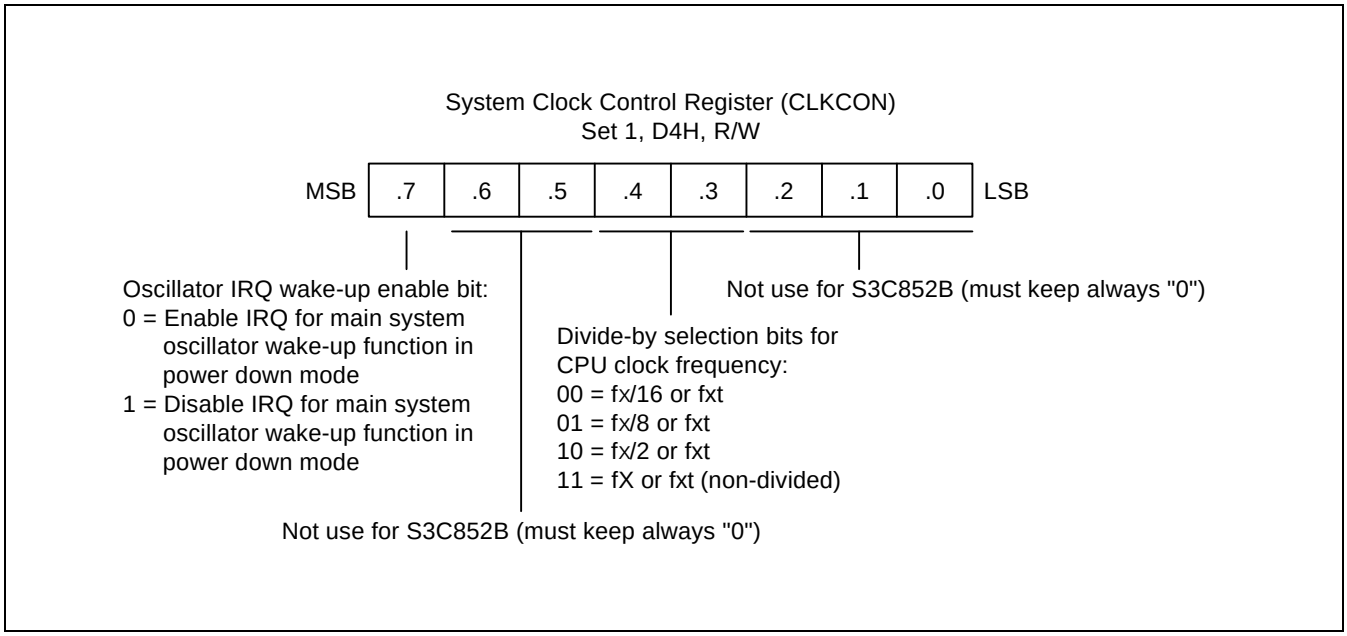

Figure 7-4. System Clock Control Register (CLKCON)

OSCILLATOR CONTROL REGISTER (OSCCON)

The oscillator control register, OSCCON, is located in set 1, address FAH. It is read/write addressable and has the following functions:

— System clock selection
— Main system oscillator control
— Subsystem oscillator control

OSCCON.0 register settings select Main system clock or Subsystem clock as system clock.
After a reset, Main system clock is selected for system clockn because The reset value of OSCCON.0 is “0”.

You can stop or run main system oscillator by setting OSCCON.3.

You can stop or run Subsystem oscillator by setting OSCCON.2.

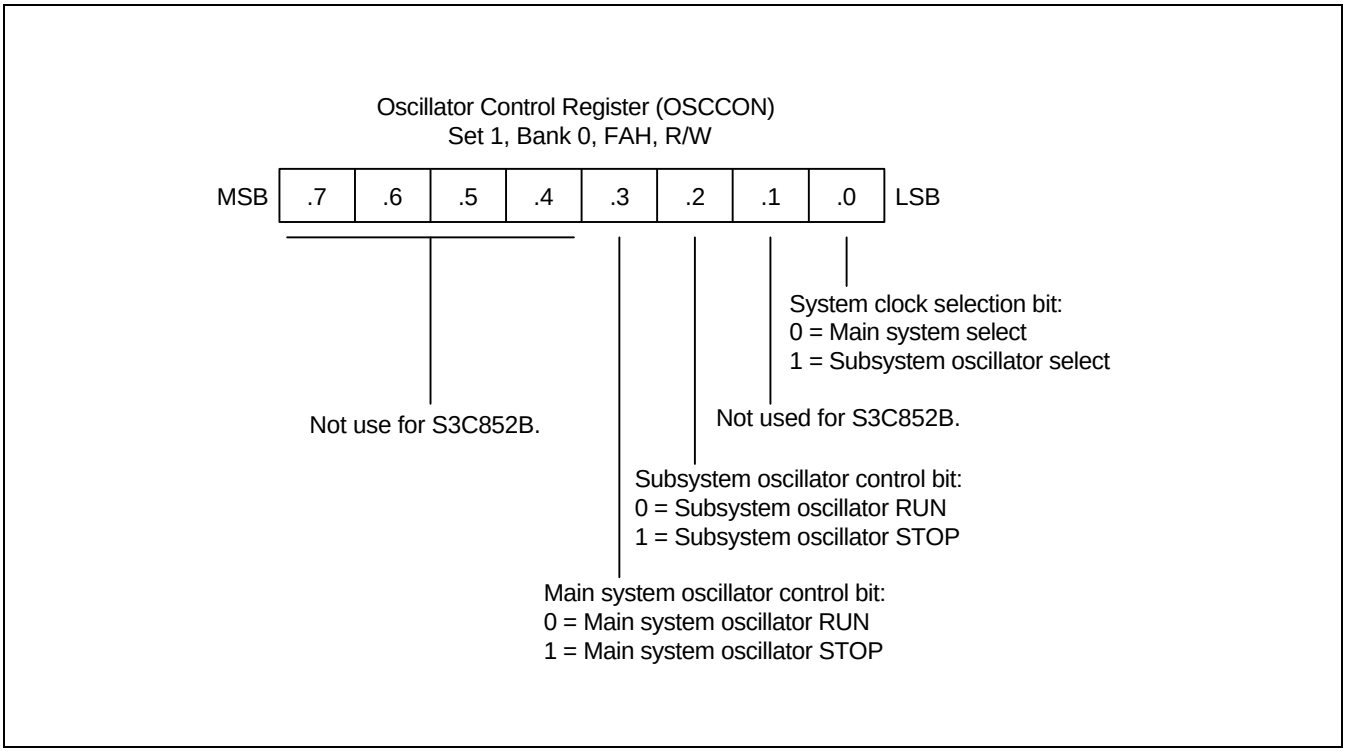

Figure 7-5. Oscillator Control Register (OSCCON)

SWITCHING THE CPU CLOCK

Data loadings in the oscillator control register, OSCCON, determine whether a main or a sub clock is selected as the CPU clock, and also how this frequency is to be divided by setting CLKCON. This makes it possible to switch dynamically between main and sub clocks and to modify operating frequencies.

OSCCON.0 select the main clock (fx) or the sub clock (fxt) for the CPU clock. OSCCON .3 start or stop main clock oscillation, and OSCCON.2 start or stop subsystem clock oscillation. CLKCON.4–.3 control the frequency divider circuit, and divide the selected fx clock by 1, 2, 8, 16, or fxt clock by 1.

For example, you are using the default CPU clock (normal operating mode and a main clock of fx/16 and you want to switch from the fx clock to a sub clock and to stop the main clock. To do this, you need to set OSCCON.0 to “1” and OSCCON.3 to “1” simultaneously. This switches the clock from fx to fxt and stops main clock oscillation.

The following steps must be taken to switch from a sub clock to the main clock: first, set OSCCON.3 to “0” to enable main system clock oscillation. Then, after a certain number of machine cycles has elapsed, select the main clock by setting OSCCON.0 to “0”.

Main clock (fx) can be double input crystal when the MCLKSEL is setting to “1”.

☞ PROGRAMMING TIP — Switching the CPU clock

1. This example shows how to change from the main clock to the sub clock:

```
MA2SUB  LD      OSCCON,#01H     ;  Switches to the sub clock
                                ;  Stop the main clock oscillation

        RET
```

2. This example shows how to change from sub clock to main clock:

```
SUB2MA  AND     OSCCON,#07H     ;  Start the main clock oscillation
        CALL    DLY16           ;  Delay 16 ms
        AND     OSCCON,#06H     ;  Switch to the main clock
        RET
DLY16   SRP     #0C0H
        LD      R0,#20H
DEL     NOP
        DJNZ    R0,DEL
        RET
```

STOP CONTROL REGISTER (STPCON)

The STOP control register, STPCON, is located in set 1, address FBH. It is read/write addressable and has the following functions:

— Enable/Disable STOP instruction

After a reset, the STOP instruction is disabled, because the value of STPCON is “00000000B”.
If necessary, you can use the STOP instruction by setting the value of STPCON to “10100101B”.

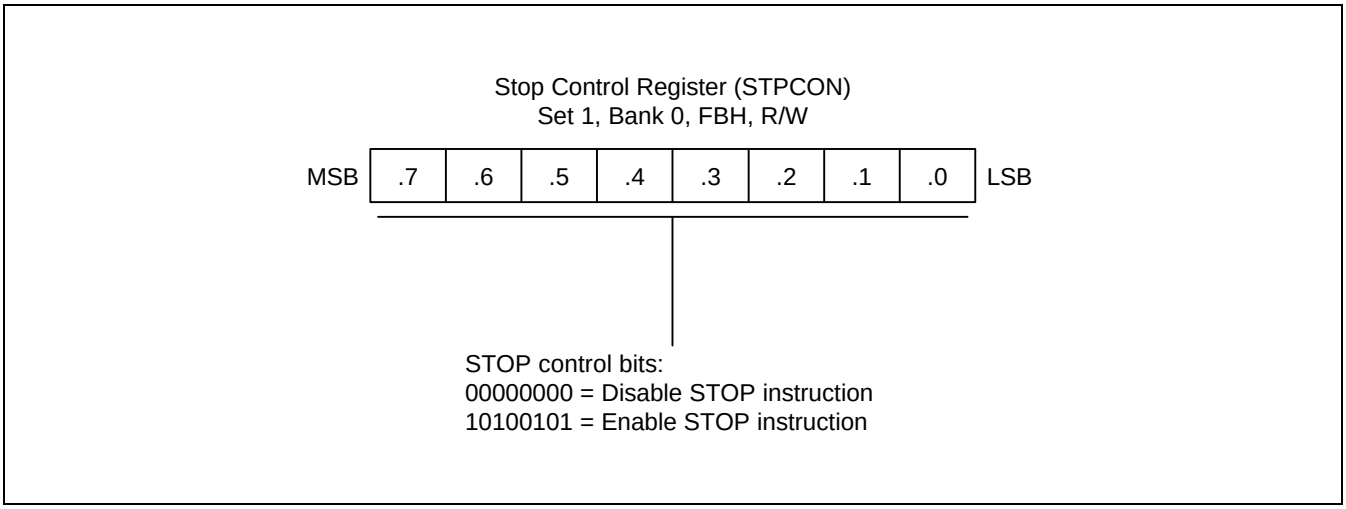

Figure 7-6. STOP Control Register (STPCON)

PHASE LOCKED LOOP (PLL)

MAIN CLOCK GENERATION

The PLL is able to generate main clock (fx = 3.579545MHz) from sub clock (fxt). In this case crystal oscillator for XIN and XOUT is removed. To enable the function generating main clock, connect CKSEL (pin 71) to VDD and PLLC (pin72) to GND through a capacitor (0.1uF).
In STOP mode, the PLL function also stopped as main clock oscillator

DOUBLING MAIN CLOCK FREQUENCY

PLL is able to double the main clock frequency (fx) to (fx*2 = 7.159090MHz) for CPU clock. To enable the function, set the MSCLK bit (CONT2.7) of CONT2 (95H, page 8, refer to P14-19 & P14-27). In this case the frequency for CPU clock will be doubled, but the frequency of the clock for CID block wouldn't be changed and remains at 3.579545MHz.
Operating voltage of the PLL is from 4.5V to 5.5V.

8 RESET and POWER-DOWN

SYSTEM RESET

OVERVIEW

During a power-on reset, the voltage at V_{DD} goes to High level and the RESET pin is forced to Low level. The RESET signal is input through a schmitt trigger circuit where it is then synchronized with the CPU clock. This procedure brings S3C852B/P852B into a known operating status.

To allow time for internal CPU clock oscillation to stabilize, the RESET pin must be held to Low level for a minimum time interval after the power supply comes within tolerance. The minimum required oscillation stabilization time for a reset operation is 1 millisecond.

Whenever a reset occurs during normal operation (that is, when both V_{DD} and RESET are High level), the RESET pin is forced Low and the reset operation starts. All system and peripheral control registers are then reset to their default hardware values (see Tables 8-1, 8-2, and 8-3).

In summary, the following sequence of events occurs during a reset operation:

— All interrupts are disabled.

— The watchdog function (basic timer) is enabled.

— Ports 0, 1, 2, 3, 4, 5, 6, 7, 8, 9 and 10 are set to schmitt trigger input mode and all pull-up resistors are disabled for the I/O port pin circuits.

— Peripheral control and data registers are disabled and reset to their default hardware values.

— The program counter (PC) is loaded with the program reset address in the ROM, 0100H.

— When the programmed oscillation stabilization time interval has elapsed, the instruction stored in ROM location 0100H (and 0101H) is fetched and executed.

— EXTBUS register is set to 00H, it can affect external interface output while EA pin is low.

NORMAL MODE RESET OPERATION

In normal (masked ROM) mode, the EA pin is tied to V_{SS}. A reset enables access to the 64-Kbyte on-chip ROM. (The external interface is not automatically configured).

ROM-LESS MODE RESET OPERATION

To configure S3C852B/P852B as a ROM-less device, you must apply a constant 5 V current to the EA pin. Assuming the EA pin is held to high level (5 V) when a reset occurs, ROM-less mode is entered and the external interface is configured automatically.

NOTE

To program the duration of the oscillation stabilization interval, you make the appropriate settings to the basic timer control register, BTCON, before entering Stop mode. Also, if you do not want to use the basic timer watchdog function (which causes a system reset if a basic timer counter overflow occurs), you can disable it by writing '1010B' to the upper nibble of BTCON.

HARDWARE RESET VALUES

Tables 8-1, 8-2, and 8-3 list the reset values for CPU and system registers, peripheral control registers, and peripheral data registers following a reset operation. The following notation is used to represent reset values:

— A "1" or a "0" shows the reset bit value as logic one or logic zero, respectively.

— An 'x' means that the bit value is undefined after a reset.

— A dash (–) means that the bit is either not used or not mapped.

Table 8-1. S3C852B/P852B Set 1 Register and Values after RESET (Masked ROM Mode)

Register Name	Mnemonic	Address		Bit Values after RESET (EA Pin is Low)							
		Dec	Hex	7	6	5	4	3	2	1	0
Timer 0 counter	T0CNT	208	D0H	0	0	0	0	0	0	0	0
Timer 0 Data Register	T0DATA	209	D1H	1	1	1	1	1	1	1	1
Timer 0 Control Register	T0CON	210	D2H	0	0	0	0	0	0	0	0
Basic Timer Control Register	BTCON	211	D3H	0	0	0	0	0	0	0	0
Clock Control Register	CLKCON	212	D4H	0	0	0	0	0	0	0	0
System Flags Register	FLAGS	213	D5H	x	x	x	x	x	x	0	0
Register Pointer 0	RP0	214	D6H	1	1	0	0	0	–	–	–
Register Pointer 1	RP1	215	D7H	1	1	0	0	1	–	–	–
Stack Pointer (High Byte)	SPH	216	D8H	x	x	x	x	x	x	x	x
Stack Pointer (Low Byte)	SPL	217	D9H	x	x	x	x	x	x	x	x
Instruction Pointer (High Byte)	IPH	218	DAH	x	x	x	x	x	x	x	x
Instruction Pointer (Low Byte)	IPL	219	DBH	x	x	x	x	x	x	x	x
Interrupt Request Register	IRQ	220	DCH	0	0	0	0	0	0	0	0
Interrupt Mask Register	IMR	221	DDH	x	x	x	x	x	x	x	x
System Mode Register	SYM	222	DEH	0	–	–	x	x	x	0	0
Register Page Pointer	PP	223	DFH	0	0	0	0	0	0	0	0

Table 8-2. S3C852B/P852B Set 1, Bank 0 Register and Values after RESET (Masked ROM Mode)

Register Name	Mnemonic	Address		Bit Values after RESET (EA Pin is Low)							
		Dec	Hex	7	6	5	4	3	2	1	0
Port 0 Data Register	P0	224	E0H	0	0	0	0	0	0	0	0
Port 1 Data Register	P1	225	E1H	0	0	0	0	0	0	0	0
Port 2 Data Register	P2	226	E2H	0	0	0	0	0	0	0	0
Port 3 Data Register	P3	227	E3H	0	0	0	0	0	0	0	0
Port 4 Data Register	P4	228	E4H	0	0	0	0	0	0	0	0
Port 5 Data Register	P5	229	E5H	0	0	0	0	0	0	0	0
Port 6 Data Register	P6	230	E6H	0	0	0	0	0	0	0	0
Port 0 interrupt control register	P0INT	231	E7H	0	0	0	0	0	0	0	0
Port 0 interrupt pending register	P0PND	232	E8H	0	0	0	0	0	0	0	0
Port 0 interrupt state register	P0STA	233	E9H	0	0	0	0	0	0	0	0
Port 0 control register (high byte)	P0CONH	234	EAH	0	0	0	0	0	0	0	0
Port 0 control register (low byte)	P0CONL	135	EBH	0	0	0	0	0	0	0	0
Port 1 control register (high byte)	P1CONH	236	ECH	0	0	0	0	0	0	0	0
Port 1 control register (low byte)	P1CONL	237	EDH	0	0	0	0	0	0	0	0
Port 1 function select register	P1AFS	238	EEH	0	0	0	0	0	0	0	0
Port 2 function select register	P2AFS	240	F0H	–	–	–	–	0	0	0	0
Port 3 control register	P3CON	241	F1H	0	0	0	0	0	0	0	0
Port 3 function select register	P3AFS	242	F2H	–	–	–	–	0	0	0	0
Port 4 control register	P4CON	243	F3H	0	0	0	0	0	0	0	0
Port 5 control register	P5CON	244	F4H	0	0	0	0	0	0	0	0
Port 6 control register	P6CON	245	F5H	0	0	0	0	0	0	0	0
Clock output mode register	CLKMOD	248	F8H	–	–	–	–	–	0	0	0
Interrupt pending register	INTPND	249	F9H	–	–	–	–	–	0	0	0
Oscillator control register	OSCCON	250	FAH	–	–	–	–	0	0	–	0
STOP control register	STPCON	251	FBH	0	0	0	0	0	0	0	0
Basic timer counter	BTCNT	253	FDH	x	x	x	x	x	x	x	x
External Memory timing register	EMT	254	FEH	–	1	1	1	1	1	0	–
Interrupt priority register	IPR	255	FFH	x	x	x	x	x	x	x	x

Table 8-3. S3C852B/P852B Set 1, Bank 1 Register Values after RESET (Masked ROM Mode)

Register Name	Mnemonic	Address		Bit Values after RESET (EA Pin is Low)							
		Dec	Hex	7	6	5	4	3	2	1	0
Timer A counter	TACNT	224	E0H	0	0	0	0	0	0	0	0
Timer B counter	TBCNT	225	E1H	0	0	0	0	0	0	0	0
Timer A data register	TADATA	226	E2H	1	1	1	1	1	1	1	1
Timer B data register	TBDATA	227	E3H	1	1	1	1	1	1	1	1
Timer A control register	TACON	228	E4H	0	0	0	0	0	0	0	0
Timer B control register	TBCON	229	E5H	0	0	0	0	0	0	0	0
Watch Timer control register	WTCON	230	E6H	0	0	0	0	0	0	0	0
SIO data register	SIODATA	234	EAH	1	1	1	1	1	1	1	1
SIO control register	SIOCON	235	EBH	0	0	0	0	0	0	0	0
SIO Pre-scaler register	SIOPS	236	ECH	0	0	0	0	0	0	0	0
Port 7 data register	P7	237	EDH	0	0	0	0	0	0	0	0
A/D data register(high byte)	ADDATAH	242	F2H	x	x	x	x	x	x	x	x
A/D data register(low byte)	ADDATAL	243	F3H	–	–	–	–	–	–	x	x
A/D control register	ADCON	244	F4H	0	0	0	0	0	0	0	0
Port 8 data register	P8	245	F5H	0	0	0	0	0	0	0	0
Port 9 data register	P9	246	F6H	0	0	0	0	0	0	0	0
Port 10 data register	P10	247	F7H	0	0	0	0	0	0	0	0
Port 7 control register (high byte)	P7CONH	248	F8H	0	0	0	0	0	0	0	0
Port 7 control register (low byte)	P7CONL	249	F9H	0	0	0	0	0	0	0	0
Port 8 control register (high byte)	P8CONH	250	FAH	0	0	0	0	0	0	0	0
Port 8 control register (low byte)	P8CONL	251	FBH	0	0	0	0	0	0	0	0
Port 9 control register (high byte)	P9CONH	252	FCH	0	0	0	0	0	0	0	0
Port 9 control register (low byte)	P9CONL	253	FDH	0	0	0	0	0	0	0	0
Port 10 control register (high byte)	P10CONH	254	FEH	0	0	0	0	0	0	0	0
Port 10 control register (low byte)	P10CONL	255	FFH	0	0	0	0	0	0	0	0

POWER-DOWN MODES

STOP MODE

Stop mode is invoked by the instruction STOP. In Stop mode, the operation of the CPU and main oscillator is halted. All peripherals which the main oscillator is selected as a clock source stop also because main oscillator stops. But, the watch timer will not halted in stop mode if the sub clock is selected as watch timer clock source. The data stored in the internal register file are retained in stop mode. Stop mode can be released in one of three ways: by a system reset, by an internal watch timer interrupt (when sub clock is selected as clock source of watch timer), or by an external interrupt.

Example:
```
STOP
NOP
NOP
NOP
```

NOTES

1. Do not use stop mode if you are using an external clock source because XIN input must be restricted internally to VSS to reduce current leakage.
2. In application programs, a STOP instruction must be immediately followed by at least three NOP instructions. This ensures an adequate time interval for the clock to stabilize before the next instruction is executed. If three or more NOP instructions are not used after STOP instruction, leakage current could be flown because of the floating state in the internal bus.

Using RESET to Release Stop Mode

Stop mode is released when the RESET signal goes active (Low level): all system and peripheral control registers are reset to their default hardware values and the contents of all data registers are retained. When the programmed oscillation stabilization interval has elapsed, the CPU starts the system initialization routine by fetching the program instruction stored in ROM location 0100H.

Using an External Interrupt to Release Stop Mode

External interrupts can be used to release stop mode. For the S3C852B microcontroller, we recommend using the INT0–INT7 interrupt, P0.0–P0.7.

Using an Internal Interrupt to Release Stop Mode

An internal interrupt, watch timer, can be used to release stop mode because the watch timer operates in stop mode if the clock source of watch timer is sub clock. If system clock is sub clock, you can't use any interrupts to release stop mode.

Please note the following conditions for Stop mode release:

— If you release stop mode using an internal or external interrupt, the current values in system and peripheral control registers are unchanged.

— If you use an internal or external interrupt for stop mode release, you can also program the duration of the oscillation stabilization interval. To do this, you must make the appropriate control and clock settings *before* entering stop mode.

— If you use an interrupt to release stop mode, the bit-pair setting for CLKCON.4/CLKCON.3 remains unchanged and the currently selected clock value is used.

— The internal or external interrupt is serviced when the stop mode release occurs. Following the IRET from the service routine, the instruction immediately following the one that initiated stop mode is executed.

IDLE MODE

Idle mode is invoked by the instruction IDL (opcode 6FH). In Idle mode, CPU operations are halted while some peripherals remain active. During Idle mode, the internal clock signal is gated away from the CPU and from all but the following peripherals, which remain active :

— Interrupt logic

— Basic timer

— Timer 0

— Timer 1 (Timer A and B)

— Watch timer

I/O port pins retain the mode (input or output) they had at the time Idle mode was entered. External interface pins are halted by high or low level, in the idle mode.

Idle Mode Release

You can release Idle mode in one of two ways:

1. Execute a reset. All system and peripheral control registers are reset to their default values and the contents of all data registers are retained. The reset automatically selects the *slowest clock (1/16)* because of the hardware reset value for the CLKCON register. If all external interrupts are masked in the IMR register, a reset is the only way you can release Idle mode.
2. Activate any enabled interrupt — internal or external. When you use an interrupt to release Idle mode, the 2-bit CLKCON.4/CLKCON.3 value remains unchanged, and the *currently selected clock* value is used. The interrupt is then serviced. When the return-from-interrupt condition (IRET) occurs, the instruction immediately following the one which initiated Idle mode is executed.

☞ PROGRAMMING TIP — Sample S3C852B Initialization Routine

The following sample program suggests initialization settings for the S3C852B address space, interrupt vectors, and peripheral functions:

```
;       << Register file reference >>
        .INCLUDE    "C:\SMDS2P\INCLUDE\REG\S3C852B.REG"
;       << User Equation Definition >>
        .INCLUDE    "C:\EQU.TBL"
;       << Interrupt Vector Addresses >>
        .ORG        00D0H
        .DW         EXT00_int       ;  IRQ6: Edge triggered ext. int.
        .DW         EXT01_int       ;  IRQ6
        .DW         EXT02_int       ;  IRQ6
        .DW         EXT03_int       ;  IRQ6
;       00D8H–00E3H: Reserved
        .ORG        00E4H
        .DW         EXT04_int       ;  IRQ7: Edge triggered ext. int.
        .DW         EXT05_int       ;  IRQ7
        .DW         EXT06_int       ;  IRQ7
        .DW         EXT07_int       ;  IRQ7
        .ORG        00F0H
        .DW         SERIAL_R_T      ;  IRQ4 Serial data receive/transmit interrupt
        .ORG        00F2H
        .DW         WT              ;  IRQ3 Watch Timer overflow interrupt
        .ORG        00F4H
        .DW         TA_Match        ;  IRQ1 Timer A match interrupt
        .DW         TB_Overflow     ;  IRQ1 Timer B overflow interrupt
        .DW         TB_Match        ;  IRQ1 Timer B match interrupt
        .ORG        00FAH
        .DW         T0_Overflow     ;  IRQ0 Timer 0 overflow interrupt
        .DW         T0_M_C          ;  IRQ0 Timer 0 match/capture interrupt
;       00FEH–00FFH: Reserved
```

☞ PROGRAMMING TIP — Sample S3C852B Initialization Routine (Continued)

```
;           << Reset Vector >>
            .ORG        0100H
            JP          t, INITIAL
            •
            •
            •
;           << System and Peripheral Initialization >>
            .ORG        0200H
INITIAL:    DI
;           <System register setting>
            LD          SYM,#00000000B      ;  Fast, global interrupt disable
            LD          EMT,#00000000B      ;  'No wait' and internal stack area select
            LD          SPH,#00H            ;  Stack pointer (high byte) to zero
            LD          SPL,#0FFH           ;  Stack pointer (low byte) to zero
            LD          OSCCON,#00H         ;  Select main clock as system clock
            LD          CLKCON,#10H         ;  fOSC/2 is selected for CPU clock
;           <Interrupt settings>
            LD          IPR,#16H            ;  Interrupt priorities
                                            ;  IRQ3 > 4 > 0 > 1 > 5 > 6 > 7
            LD          IMR,#10001001B      ;  IRQ levels 0, 3, and 7 enable
                                            ;  Level 0  =  Timer 0 interrupt
                                            ;  Level 3  =  Watch Timer interrupt
                                            ;  Level 7  =  External interrupt
```

☞ PROGRAMMING TIP — Sample S3C852B Initialization Routine (Continued)

```
INI_PERI_SET:
;           <Port 0 setting>
            LD      P0CONH,#55H     ; Input, Schmitt trigger, Pull-up resistor enabled
            LD      P0CONL,#55H
            LD      P0STA, #00H     ; Select Falling edge interrupt detection
            LD      P0PND,#00H      ; Clear External interrupt pending bits
            LD      P0INT, #0FFH    ; All external interrupt enable
;           <Port 1 setting>
            LD      P1AFS,#00H      ; Select Normal I/O Port 1
            LD      P1CONH,#0AAH    ; Output, push-pull
            LD      P1CONL,#0AAH
;           <Port 2 setting>
            LD      P2CON,#0AAH     ; Output, push-pull

;           <Port 3 setting>
            LD      P3AFS, #00H     ; Select Normal I/O Port 3
            LD      P3CON,#0AAH     ; Output, push-pull
```

☞ PROGRAMMING TIP — Sample S3C852B Initialization Routine (Continued)

```
;           <Port 4 setting>
            LD          P4CON,#22H          ;  Output, push-pull
;           <Port 5 setting>
            LD          P5CON,#22H          ;  Output, push-pull
;           <Port 6 setting>
            LD          P6CON,#22H          ;  Output, push-pull
;           <Port 7 setting>
            LD          P7CONH,#0AAH        ;  Output, push-pull
            LD          P7CONL,#0AAH
;           <Port 8 setting>
      LD      P8CONH,#0AAH      ;      Output, push-pull
      LD      P8CONL,#0AAH
;           <Port 9 setting>
      LD      P9CONH,#0AAH      ;      Output, push-pull
      LD      P9CONL,#0AAH
;           <Port 10 setting>
      LD      P10CONH,#0AAH     ;      Output, push-pull
      LD      P10CONL,#0AAH
;           <Timer 0>
            LD          T0DATA,#08H         ;  Timer A clock source clock divided by 9
            LD          T0CON,#10001100B    ;  Select fxx/64 as Timer 0 clock source
                                            ;   Enable overflow interrupt
;           <Timer A>                       ;  Disabled
           SB1
            LD          TACON,#00H
;           <Timer B>                       ;  Disabled
            LD          TBCON,#00H
```

☞ PROGRAMMING TIP — Sample S3C852B Initialization Routine (Continued)

```
;           <SIO setting>                       ;  Disable
            LD          SIOCON,#00H
;           << Register Initialization >>
            SB0
            SRP             #0C0H
;           <Clear all data registers 00H–0FFH>
            LD          R0,#0FFH
RAMCLR:     CLR         @R0
            DJNZ        R0,RAMCLR
;           <Initialize other registers>
            •
            •
            •
            EI                                  ;  Must be executed in this position
                                                ;  before external interrupt is executed
;           << Main Loop >>
MAIN:       NOP                                 ;  Start main loop
            LD          BTCON,#03H              ;  Enable watchdog timer, clear BTCNT, and
                                                ;  Basic timer clock input divider.
                                                ;
            •
            •
            •
            CALL        KEY_SCAN
            •
            •
            •
            •
            •
            •
            CALL        JOB
            •
            •
            •
            JP          t,MAIN
```

☞ **PROGRAMMING TIP — Sample S3C852B Initialization Routine (Continued)**

```
;               <Subroutine 1>
KEY_SCAN:
                NOP
                •
                •
                •
                RET
;               <Subroutine 2>
JOB:            NOP
                •
                •
                •
                RET
;               << Interrupt Service Routine >>
T0_Overflow:PUSH        RP0                     ;   IRQ0
                PUSH    RP1
                SRP     #T0_REG                 ;   Example: T0_REG = 00H
                •
                •
                •
                AND     INTPND,#11111110B       ;   Clear pending bit (omissible)
                POP     RP1
                POP     RP0
                IRET

T0_M_C:         AND     T0CON,#11111110B        ;   Clear pending bit, IRQ0
                IRET
TA_Match:       AND     TACON,#11111110B        ;   Clear pending bit, IRQ1
                IRET
TB_Overflow: AND        INTPND,#11111101B       ;   Clear pending bit (omissible), IRQ1
                IRET
TB_Match:       AND     INTPND,#11111011B       ;   Clear pending bit, IRQ1
                IRET
WT:             AND     WTCON,#11111110B        ;   Clear pending bit, IRQ3
                IRET
```

☞ PROGRAMMING TIP — Sample S3C852B Initialization Routine (Concluded)

```
;                   << Other Interrupt Vectors >>
SERIAL_R_T:   AND     SIOCON,#11111110H          ; Clear pending bit, IRQ4
              IRET
EXT00_int:    LD      P0PND,#11111110B           ; Clear pending bit, IRQ6
              •
              •
              IRET
EXT01_int:    LD      P0PND,#11111101B           ; Clear pending bit, IRQ6
              •
              •
              IRET
EXT02_int:    LD      P0PND,#11111011B           ; Clear pending bit, IRQ6
              •
              •
              IRET
EXT03_int:    LD      P0PND,#11110111B           ; Clear pending bit, IRQ6
              •
              •
              IRET
EXT04_int:    LD      P0PND,#11101111B           ; Clear pending bit, IRQ7
              •
              •
              IRET
EXT05_int:    LD      P0PND,#11011111B           ; Clear pending bit, IRQ7
              •
              •
              IRET
EXT06_int:    LD      P0PND,#10111111B           ; Clear pending bit, IRQ7
              •
              •
              IRET
EXT07_int:    LD      P0PND,#01111111B           ; Clear pending bit, IRQ7
              •
              •
              IRET
              END
```

NOTE: When clearing a interrupt pending bit by software, using ***LD*** instruction is recommended to prevent malfunction of interrupt operation.

9 I/O PORTS

OVERVIEW

The S3C852B/P852B microcontrollers have P0–P10 I/O ports. P2 and P3 are 4-bit ports, the others are 8-bit ports. So, This gives a total of 80 I/O pins. Each port can be flexibly configured to meet application design requirements. The CPU accesses ports by directly writing or reading port registers. No special I/O instructions are required.

All ports of the S3C852B/P852B can be configured to input or output mode and P3–P6 are sharing with external interface, A0–A15, D0–D7, PM, DM, RD, WR.

Table 9-1 gives you a general overview of S3C852B I/O port functions.

Table 9-1. S3C852B Port Configuration Overview

Port	Configuration Options
0	8-bit general-purpose I/O port; Schmitt trigger input, schmitt trigger input with pull-up resistor, push-pull output. P0.1, P0.3, P0.5 and P0.6 can be used as alternative function (BUZ, T0, TA, TB). All P0 pin circuits have interrupt enable/disable (P0INT), pending control(P0PND), and rising/falling edge control (P0STA).
1	8-bit general-purpose I/O port; Schmitt trigger input, schmitt trigger input with pull-up resistor, push-pull output, open-drain output. All P1 pin circuits have alternative function control(P1AFS), the alternative functions of P1.0–P1.3 are the analog input function(ADC0–ADC3).
2	4-bit general-purpose I/O port; Schmitt trigger input, schmitt trigger input with pull-up resistor, push-pull output, open-drain output.
3	4-bit general-purpose I/O port; Schmitt trigger input, schmitt trigger input with pull-up resistor, push-pull output, open-drain output. All P3 pin circuits have alternative function control (P2AFS), and the alternative functions of P3.0–P3.3 are the external memory interface function(PM, DM, RD, WR).
4	8-bit general-purpose I/O port; Schmitt trigger input, schmitt trigger input with pull-up resistor, push-pull output, open-drain output. All P4 pin circuits can be used as alternative function for external memory interface function (D0–D7).
5	8-bit general-purpose I/O port; Schmitt trigger input, schmitt trigger input with pull-up resistor, push-pull output, open-drain output. All P5 pin circuits can be used as alternative function for external memory interface function (A0–A7).
6	8-bit general-purpose I/O port; Schmitt trigger input, schmitt trigger input with pull-up resistor, push-pull output, open-drain output. All P6 pin circuits can be used as alternative function for external memory interface function (A8–A15).
7	8-bit general-purpose I/O port; Schmitt trigger input, schmitt trigger input with pull-up resistor, push-pull output, open-drain output.
8	8-bit general-purpose I/O port; Schmitt trigger input, schmitt trigger input with pull-up resistor, push-pull output, open-drain output.
9	8-bit general-purpose I/O port; Schmitt trigger input, schmitt trigger input with pull-up resistor, push-pull output, open-drain output.
10	8-bit general-purpose I/O port; Schmitt trigger input, schmitt trigger input with pull-up resistor, push-pull output, open-drain output.

PORT DATA REGISTERS

Table 9-2 gives you an overview of the register locations of all seven S3C852B I/O port data registers. Data registers for ports 0 to 10 have the general format shown in Figure 9-1.

Table 9-2. Port Data Register Summary

Register Name	Mnemonic	Decimal	Hex	Location	R/W
Port 0 data register	P0	224	E0H	Set 1	R/W
Port 1 data register	P1	225	E1H	Set 1	R/W
Port 2 data register	P2	226	E2H	Set 1	R/W
Port 3 data register	P3	227	E3H	Set 1	R/W
Port 4 data register	P4	228	E4H	Set 1	R/W
Port 5 data register	P5	229	E5H	Set 1	R/W
Port 6 data register	P6	230	E6H	Set 1	R/W
Port 7 data register	P7	237	EDH	Set 1	R/W
Port 8 data register	P8	245	F5H	Set 1	R/W
Port 9 data register	P9	246	F6H	Set 1	R/W
Port 10 data register	P10	247	F7H	Set 1	R/W

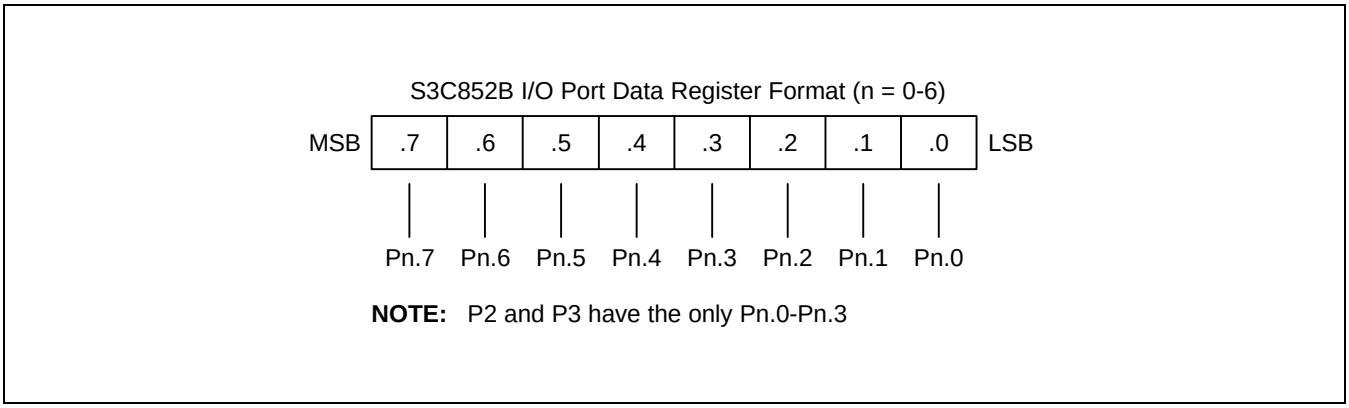

Figure 9-1. S3C852B I/O Port Data Register Format

PORT 0

Port 0 is an 8-bit I/O port with individually configurable pins. Port 0 can serve either as a general-purpose 8-bit I/O port, alternative functions (BUZ for buzzer signal output, T0 for timer 0 output, TA for timer 1/A output and TB for timer B output), or its pins can be configured individually as external interrupt inputs. All inputs are schmitt triggered. Port 0 is accessed directly by writing or reading the Port 0 data register, P0 (R224, E0H) in set 1.

Port 0 Control Registers (P0CONH, P0CONL)

The direction of each port pin is configured by bit-pair settings in two control registers: P0CONH (high byte, EAH, set 1) and P0CONL (low byte, EBH, set 1). P0CONH controls pins P0.4–P0.7 (pins 32–35) and P0CONL controls pins P0.0–P0.3 (pins 28–31). Both registers are read-write addressable using 8-bit instructions.

When select alternative function by setting bit-pair to “11”(P0.1, P0.3, P0.5, P0.6), P0.1, P0.3, P0.5, P0.6 can be automatically configured respectively, as BUZ, timer 0, timer 1/A and timer B output.
There are two input mode and one output mode: Schmitt trigger input, schmitt trigger input with pull-up resistor and Push-pull output.

A reset clears all P0CONH and P0CONL bits to logic zero. This configures Port 0 pins to schmitt trigger input.

Port 0 Interrupt Enable and Pending Registers (P0INT, P0PND)

To process external interrupts, two additional control registers are provided: the Port 0 interrupt enable register, P0INT (R231, E7H, set 1) and the Port 0 interrupt pending register, P0PND (R232, E8H, set 1).

By setting bits in the Port 0 interrupt enable register P0INT to "1", you can use specific Port 0 pins to generate interrupt requests when specific signal edges are detected. The interrupt names INT0–INT7 correspond to pins P0.0–P0.7. After a reset, P0INT bits are cleared to “00H”, disabling all external interrupts.

The Port 0 interrupt pending register P0PND lets you check for interrupt pending conditions and clear the pending condition when the interrupt request has been serviced. Incoming interrupt requests are detected by polling the P0PND bit values.

When the interrupt enable bit of any Port 0 pin is set to "1", a rising or falling signal edge at that pin generates an interrupt request. (Remember that the Port 0 interrupt pins must first be configured by setting them to input mode in the corresponding P0CONH or P0CONL register.)

The corresponding P0PND bit is then set to "1" and the IRQ pulse goes high to signal the CPU that an interrupt request is waiting.

When a Port 0 interrupt request has been serviced, the application program must clear the appropriate interrupt pending register bit by writing a "0" to the correct pending bit in the P0PND register. Please note that writing a "0" value has no effect.

Port 0 Interrupt State Register (P0STA)

P0 interrupt can be generated in falling edge or rising edge, depending on the value of the P0 interrupt state register (R233, E9H, set 1) P0STA. If the value is set to "1", P0 interrupt is generated in rising edge. If the value is set to "0", P0 interrupt is generated in falling edge.

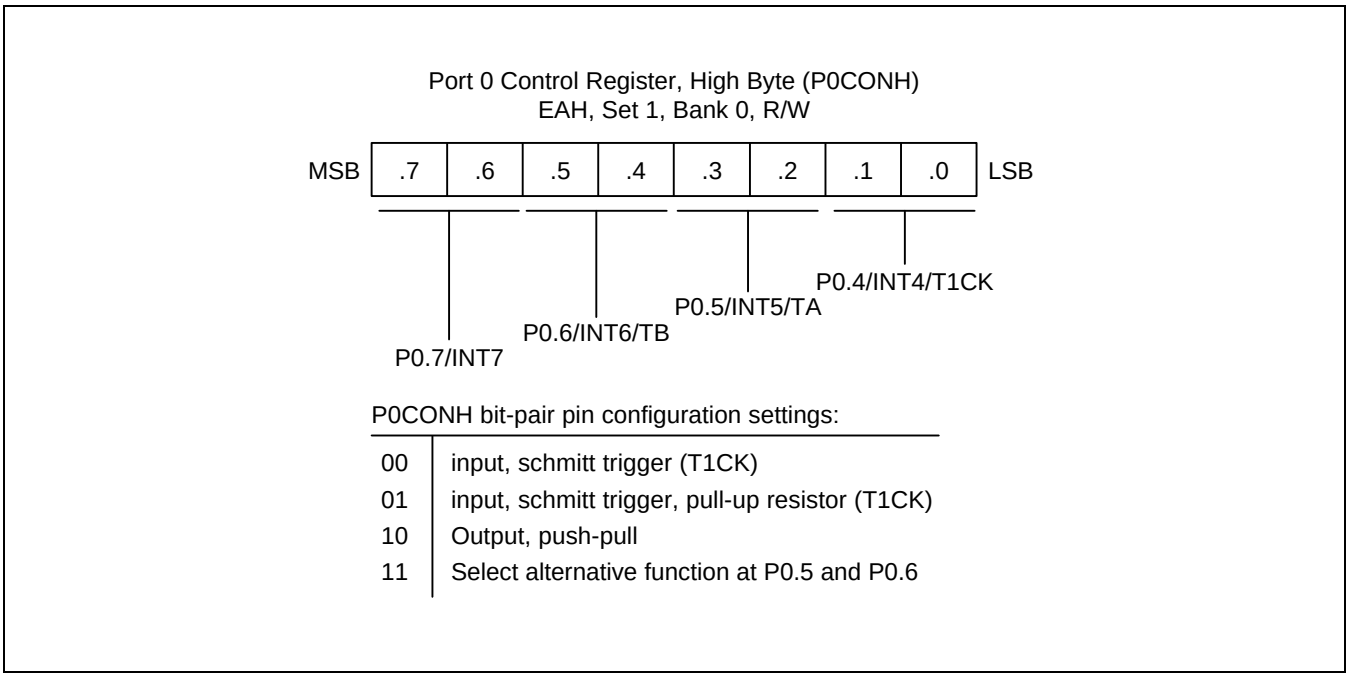

Figure 9-2. Port 0 Control Register (P0CONH)

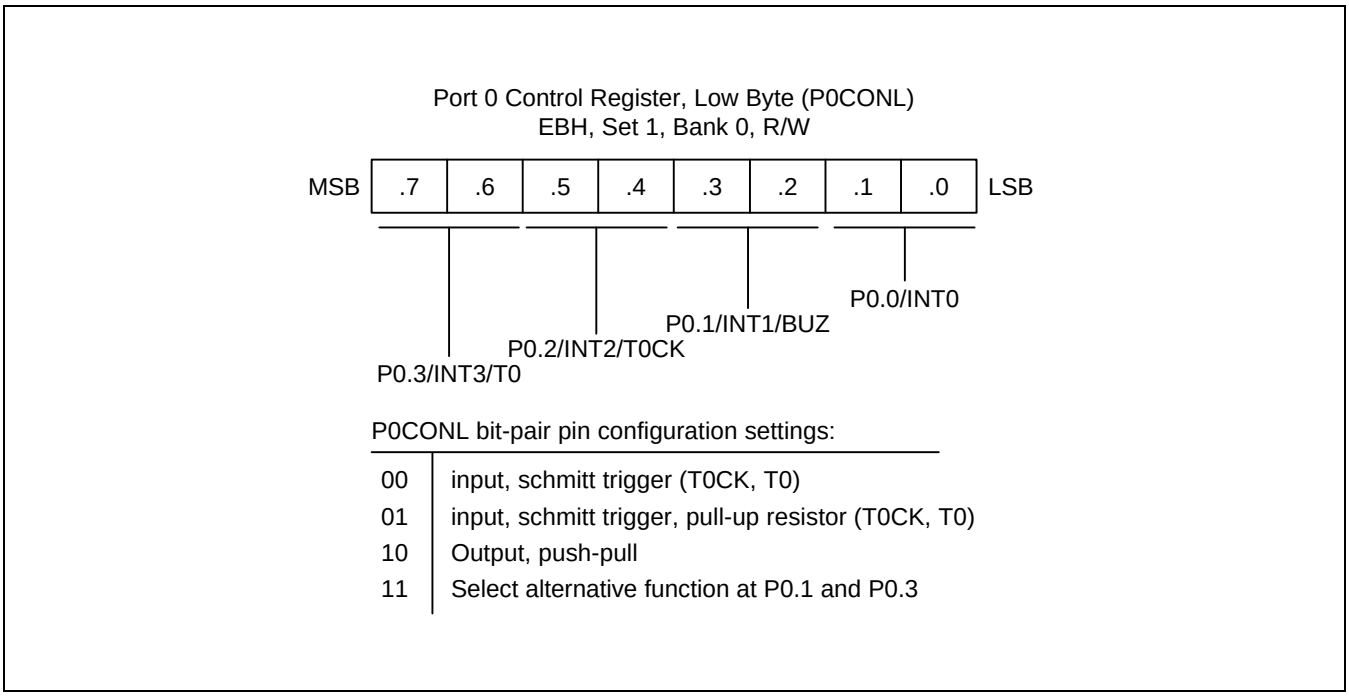

Figure 9-3. Port 0 Control Register (P0CONL)

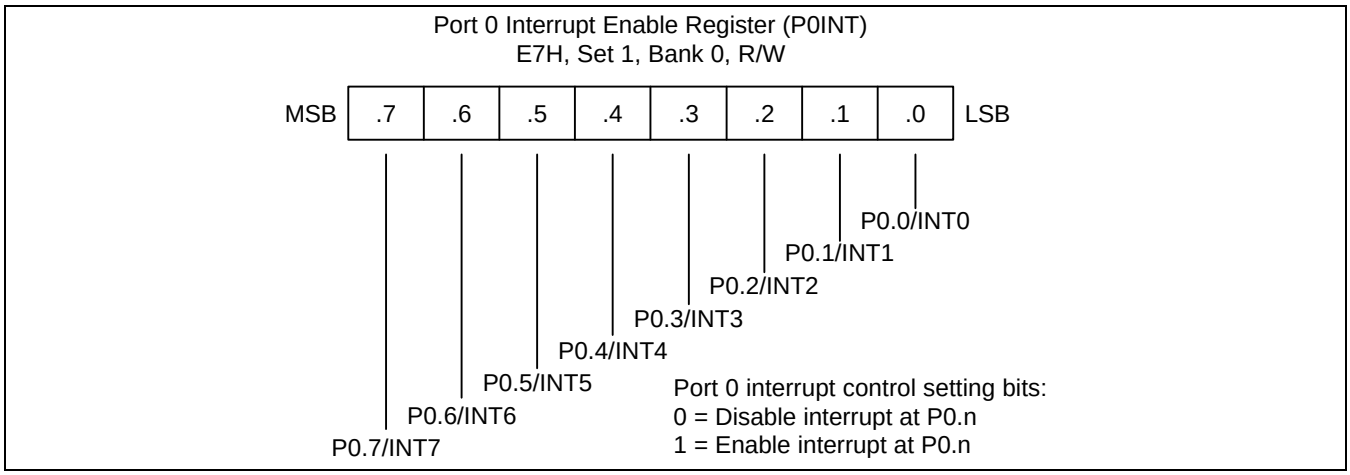

Figure 9-4. Port 0 Interrupt Enable Register (P0INT)

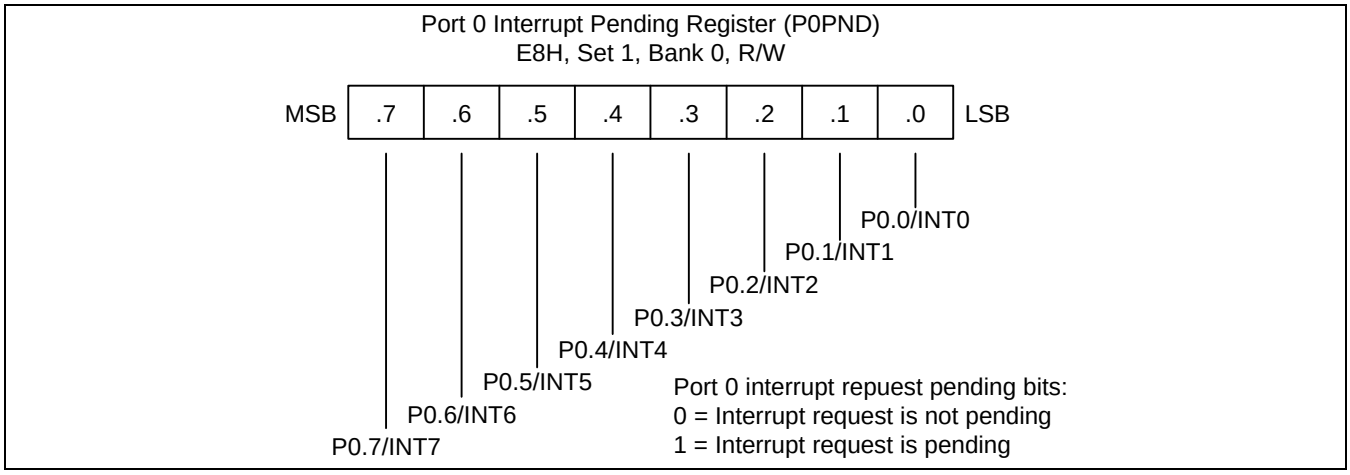

Figure 9-5. Port 0 Interrupt Pending Register (P0PND)

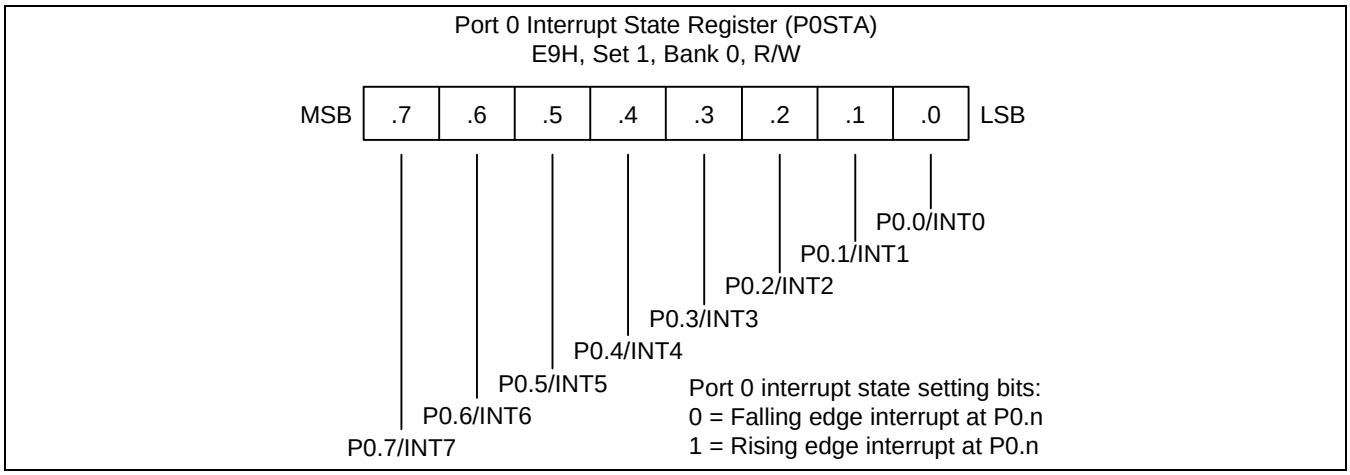

Figure 9-6. Port 0 Interrupt State Register (P0STA)

PORT 1

Port 1 is an 8-bit I/O port with individually configurable pins. Port 1 can serve either as a general-purpose 8-bit I/O port, alternative functions (ADC0–ADC3) for analog to digital input.
Port 1 have the Port 1 alternative function select register (P1AFS) for selection alternative function of Port 1.
Port 1 is accessed directly by writing or reading the Port 1 data register, P1 (R225, E1H) in set 1. You can use port 1 for general I/O, or for the alternative functions by setting P1AFS:

Port 1 Control Registers (P1CONH, P1CONL)

The direction of each port pin is configured by bit-pair settings in two control registers: P1CONH (high byte, ECH, set 1) and P1CONL (low byte, EDH, set 1). P1CONH controls pins P1.4–P1.7 (pins 40–43) and P1CONL controls pins P1.0–P1.3 (pins 36–39). Both registers are read-write addressable using 8-bit instructions.

There are two input mode and two output mode: Schmitt trigger input, schmitt trigger input with pull-up resistor, Push-pull output and Open-drain output.

A reset clears all P1CONH and P1CONL bits to logic zero. This configures Port 1 pins to schmitt trigger input.

Port 1 Alternative Function Select Register (P1AFS)

Port 1 can be used either as a general-purpose 8-bit I/O port or alternative functions, depending on the value of the Port 1 alternative function select register (R238, EEH, set 1) P1AFS.
If the P1AFS is set to “11111111B”, the corresponding pins are selected to alternative functions.
If the P1AFS is set to “00000000B”, the corresponding pins are selected to general I/O ports.

That is,

— P1.0–P1.3 can be configured as ADC0–ADC3 for analog to digital input by setting P1AFS.0–P1AFS.3 to "1".

The special functions that you can program using the port 1 high byte control register must also be enabled in the associated peripheral. Also, when using port 1 pins for functions other than general I/O, you must still set the corresponding port 1 control register value to configure each bit to input or output mode.

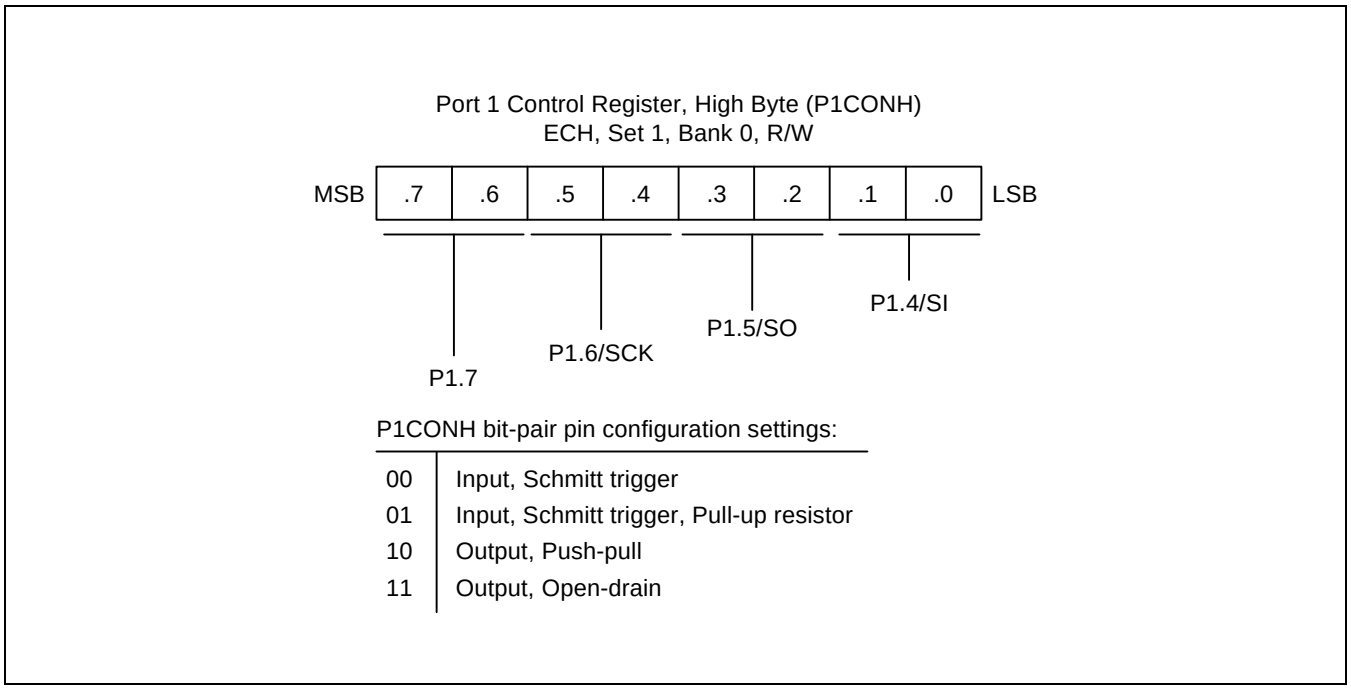

Figure 9-7. Port 1 High-Byte Control Register (P1CONH)

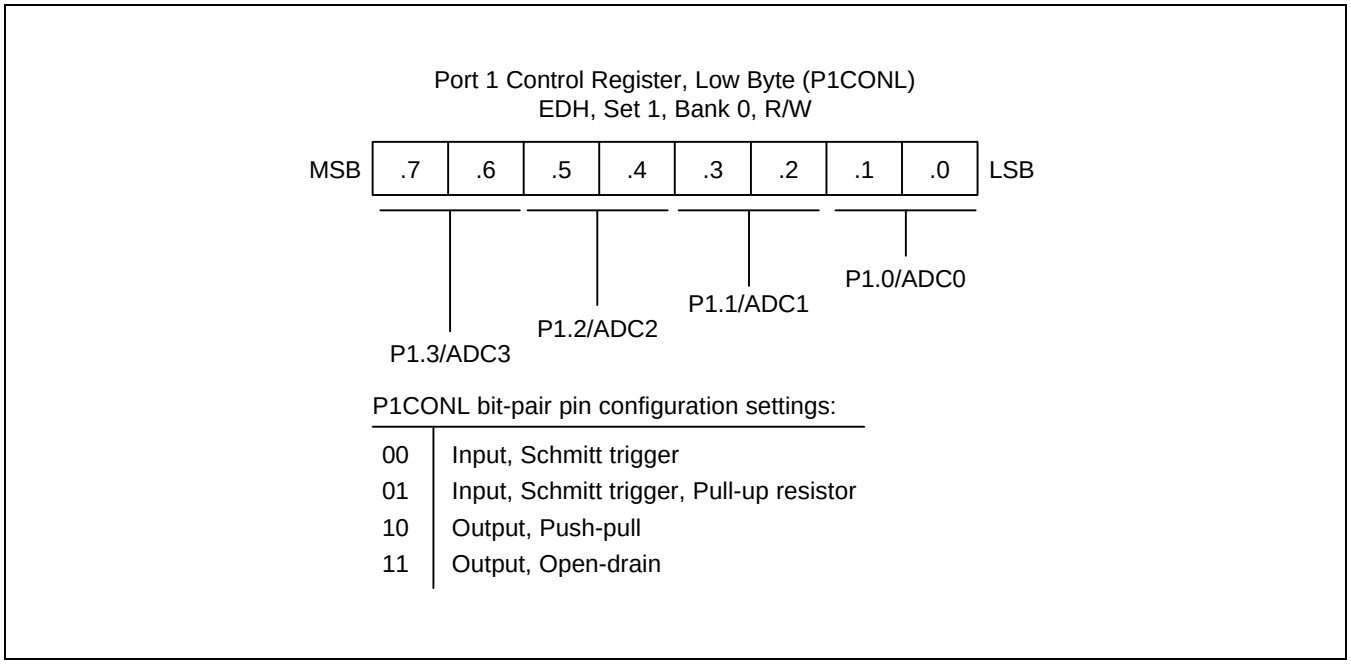

Figure 9-8. Port 1 Low-Byte Control Register (P1CONL)

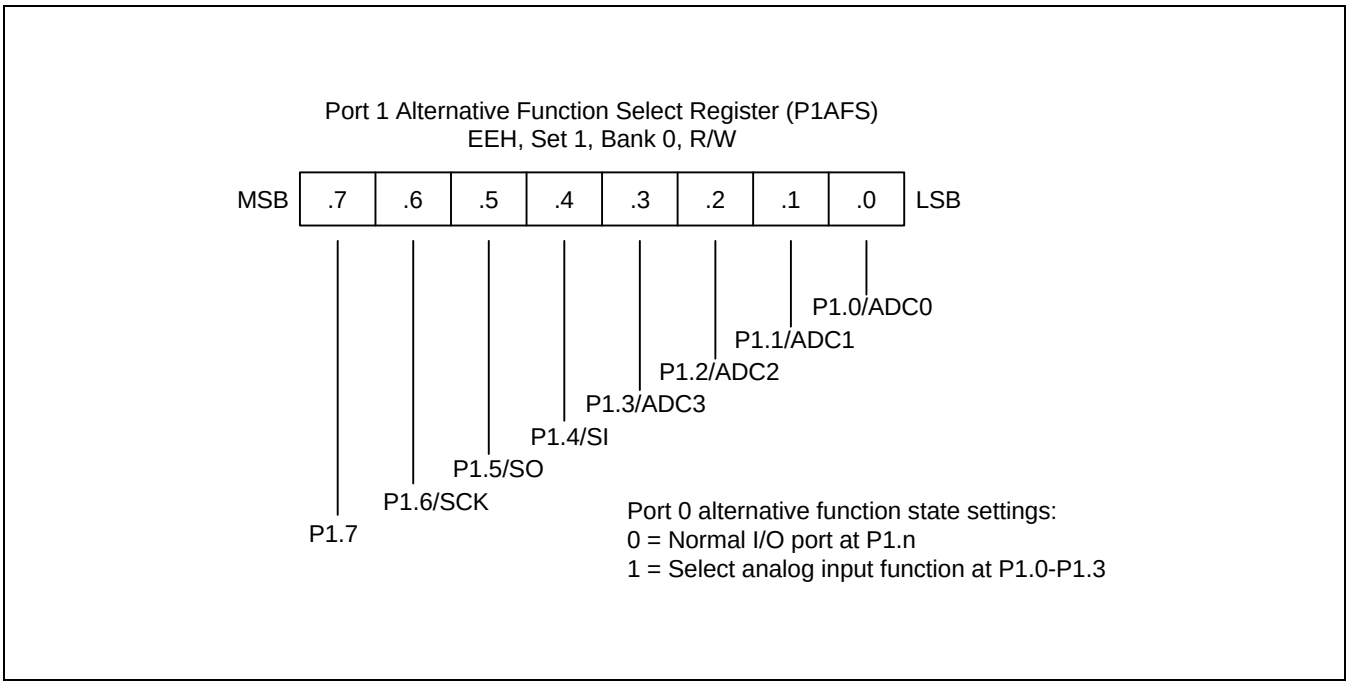

Figure 9-9. Port 1 Alternative Function Select Register (P1AFS)

PORT 2

Port 2 is an 4-bit I/O port with individually configurable pins. Port 2 is accessed directly by writing or reading the Port 2 data register, P2 (R226, E2H) in set 1. You can use port 2 for general I/O.

Port 2 Control Registers (P2CON)

The direction of each port pin is configured by bit-pair settings in Port 2 control register: P2CON (EFH, set 1). P2CON controls pins P2.0–P2.3 (pins 16–19). Port 2 control registers is read-write addressable using 8-bit instructions.

There are two input mode and two output mode: Schmitt trigger input, schmitt trigger input with pull-up resistor, Push-pull output and Open-drain output.

A reset clears all P2CON bits to logic zero. This configures Port 2 pins to schmitt trigger input.

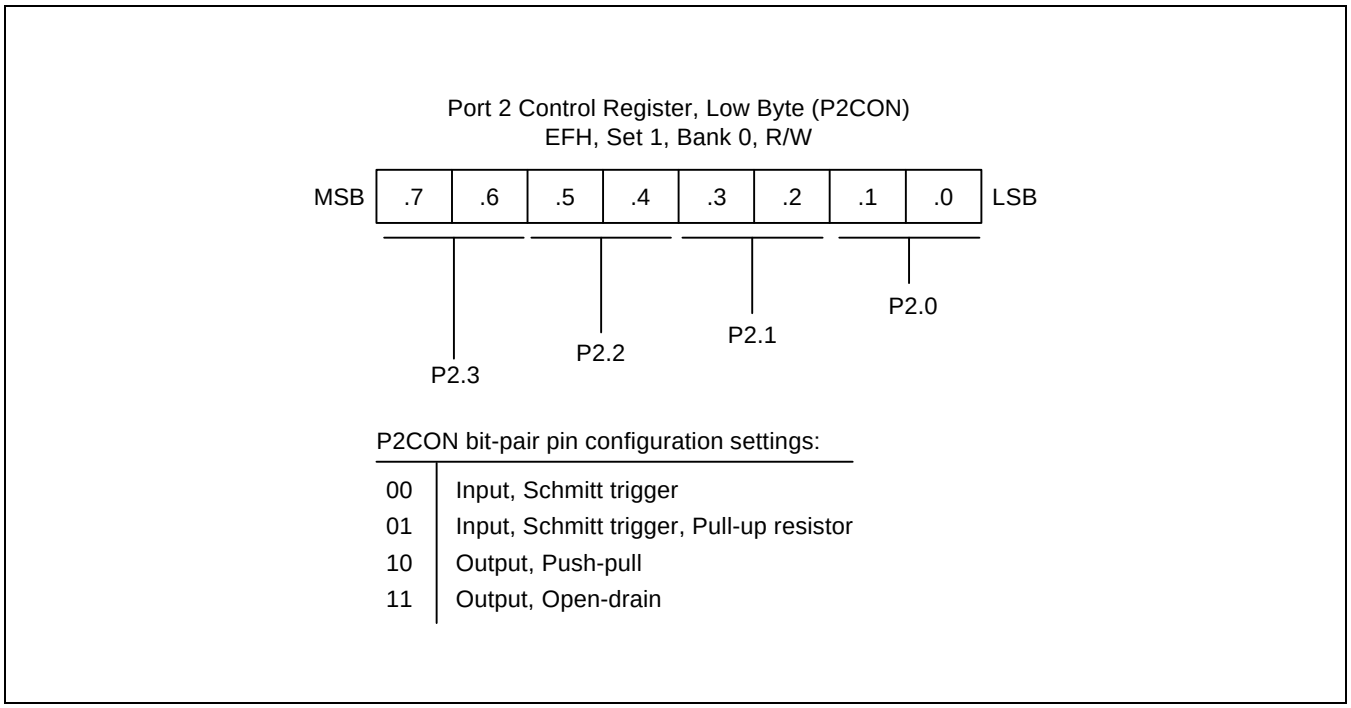

Figure 9-10. Port 2 Control Register (P2CON)

PORT 3

Port 3 is an 4-bit I/O port with individually configurable pins. Port 3 can serve either as a general-purpose 4-bit I/O port, alternative functions (PM, DM, RD, WR for controlling external memory interface).
Port 3 have the Port 3 alternative function select register(P3AFS) for selection alternative function of Port 3.
Port 3 is accessed directly by writing or reading the Port 3 data register, P3 (R227, E3H) in set 1. You can use port 3 for general I/O, or for the alternative functions by setting P3AFS.

Port 3 Control Registers (P3CON)

The direction of each port pin is configured by bit-pair settings in Port 3 control register: P3CON (F1H, set 1). P3CON controls pins P3.0–P3.3 (pins 12–15). Port 3 control registers is read-write addressable using 8-bit instructions.

There are two input mode and two output mode: Schmitt trigger input, schmitt trigger input with pull-up resistor, Push-pull output and Open-drain output.

A reset clears all P3CON bits to logic zero. This configures Port 3 pins to schmitt trigger input.

Port 3 Alternative Function Select Register (P3AFS)

Port 3 can be used either as a general-purpose 4-bit I/O port or alternative functions, depending on the value of the Port 3 alternative function select register (R242, F2H, set 1) P3AFS.
If the P3AFS is set to “11111111B”, the corresponding pins are selected to alternative functions.
If the P3AFS is set to “00000000B”, the corresponding pins are selected to general I/O ports.

That is,

— P3.0–P3.3 can be configured as PM, DM, RD, WR for controlling external memory interface setting P3AFS.0–F3AFS.3 to "1".

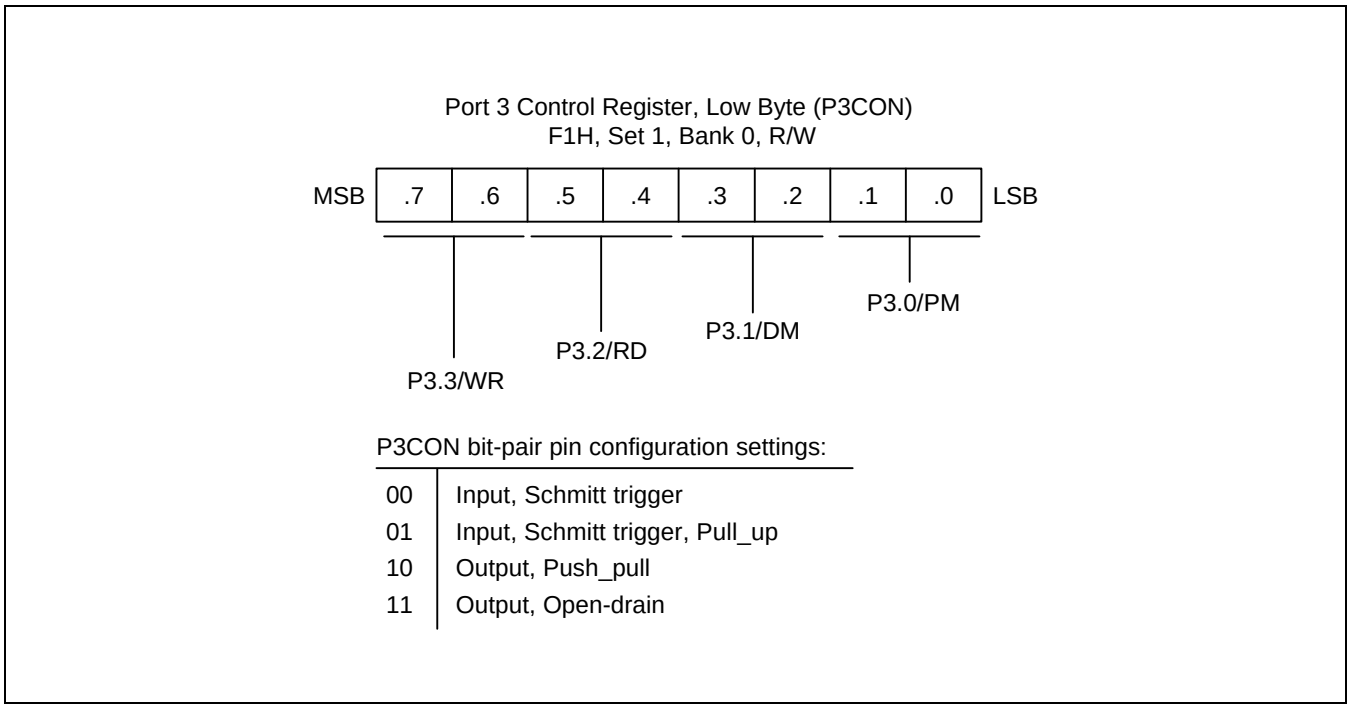

Figure 9-11. Port 3 Control Register (P3CON)

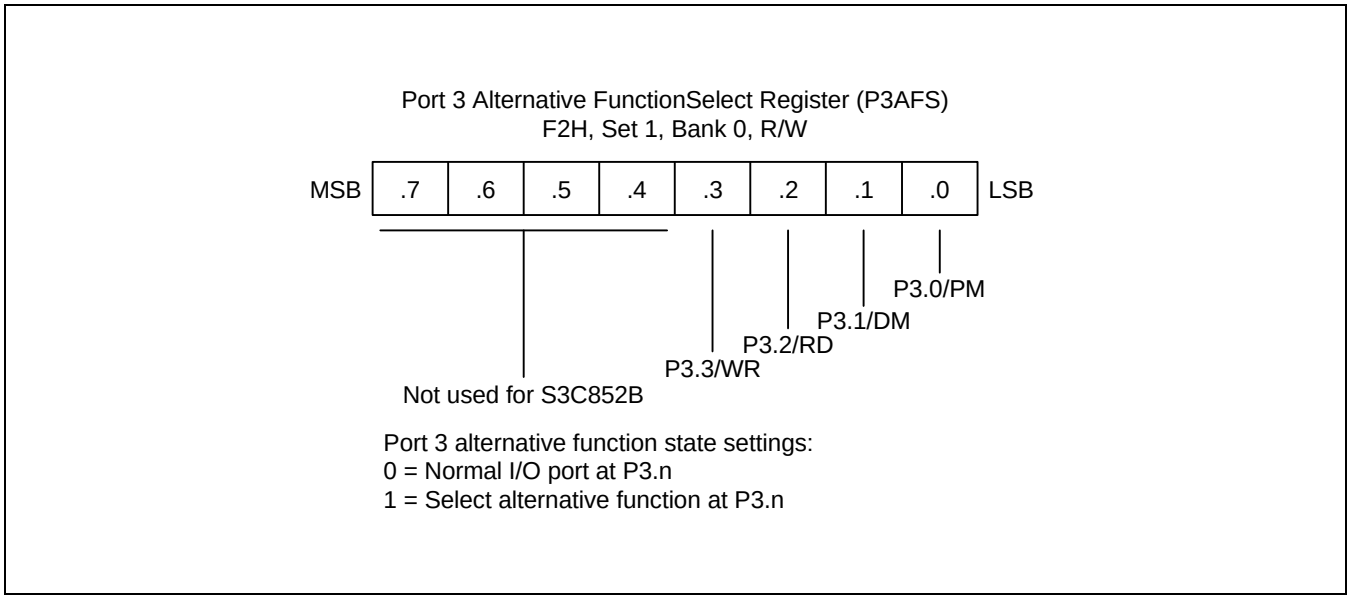

Figure 9-12. Port 3 Alternative Function Select Register (P3AFS)

PORT 4

Port 4 can be configured on a nibble basis for general data input or output. Port 4 can serve either as a general-purpose 8-bit I/O port or alternative functions (D0–D7 for the external peripheral interface).

Port 4 is accessed directly by writing or reading the Port 4 data register, P4 (R228, E4H) in set 1. You can use port 4 for general I/O, or for the alternative functions by P4CON setting "0100B" for each nibble configures the pins as external interface lines.

The port 4 data register cannot be written, however, when port 4 bits are configured as data lines for the external interface: writes have no effect and reads only return the state of the pin.

Port 4 Control Registers (P4CON)

The direction of each port pin is configured by nibble settings in Port 4 control register: P4CON (F3H, set 1). P4CON controls pins P4.0–P4.7 (pins 148–155). Port 4 control registers is read-write addressable using 8-bit instructions.

The P4CON setting “0100B” for each nibble configures the pins as external interface lines. Bits 4–7 of P4CON control the upper nibble pins, P4.4–P4.7, and bits 0–3 of P4CON control the lower nibble pins, P4.0–P4.3.

There are two input mode and two output mode: Schmitt trigger input, schmitt trigger input with pull-up resistor, Push-pull output and Open-drain output.

In normal operating mode a reset operation clears all P4CON register values to "0" , this configures Port 4 pins to schmitt trigger input. If you want to configure an external memory area, you can use routine to set the P4CON value to “01000100B”. This setting correctly configures data lines D0–D7.

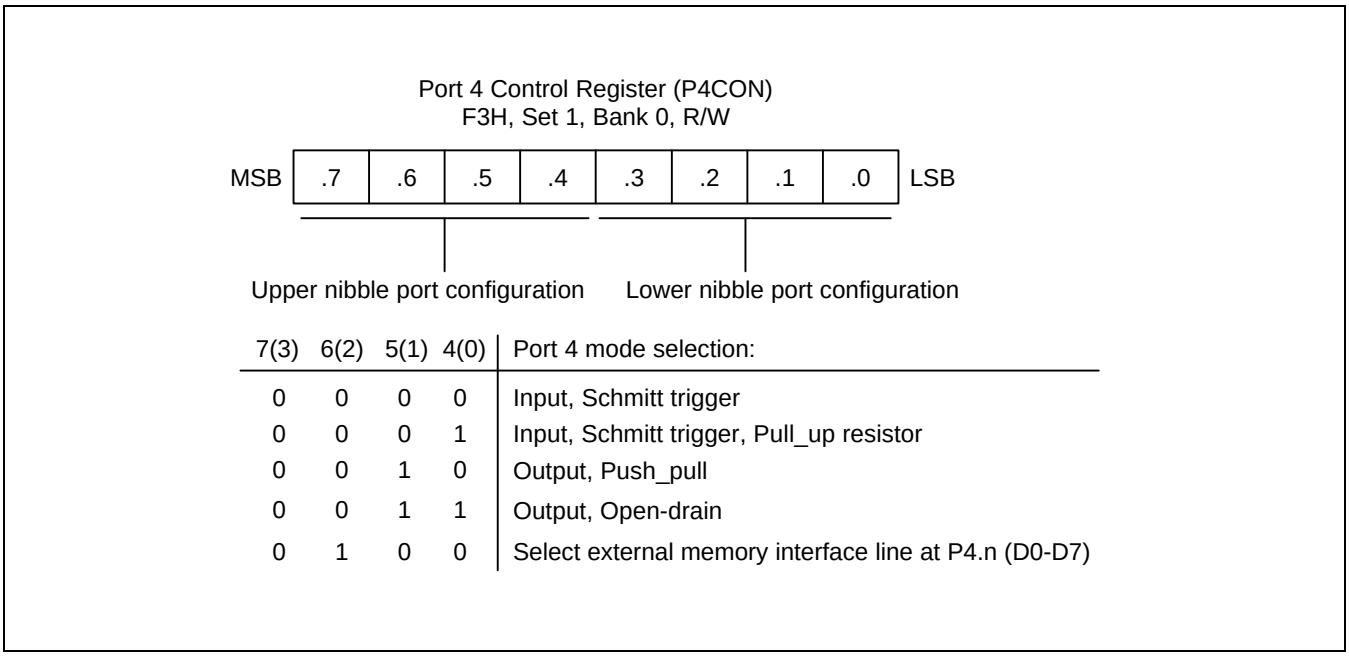

7(3)	6(2)	5(1)	4(0)	Port 4 mode selection:
0	0	0	0	Input, Schmitt trigger
0	0	0	1	Input, Schmitt trigger, Pull_up resistor
0	0	1	0	Output, Push_pull
0	0	1	1	Output, Open-drain
0	1	0	0	Select external memory interface line at P4.n (D0-D7)

Figure 9-13. Port 4 Control Register (P4CON)

PORT 5

Port 5 is basically identical to port 4, except that its alternate use is as the address lines (A0–A7) for the external interface. (Port 4 can alternately be configures as the data lines D0–D7.)

Port 5 can be configured on a nibble basis for general data input or output. Port 5 can serve either as a general-purpose 8-bit I/O port or alternative functions (A0–A7 for the external peripheral interface).

Port 5 is accessed directly by writing or reading the Port 5 data register, P5 (R229, E5H) in set 1. You can use port 5 for general I/O, or for the alternative functions by P5CON setting “0100B” for each nibble configures the pins as external interface lines.

The port 5 data register cannot be written, however, when port 5 bits are configured as address lines for the external interface: writes have no effect and reads only return the state of the pin.

Port 5 Control Registers (P5CON)

The direction of each port pin is configured by nibble settings in Port 5 control register: P5CON (F4H, set 1). P5CON controls pins P5.0–P5.7 (pins 156–3). Port 5 control registers is read-write addressable using 8-bit instructions.

The P5CON setting “0100B” for each nibble configures the pins as external interface lines. Bits 4–7 of P5CON control the upper nibble pins, P5.4–P5.7, and bits 0–3 of P5CON control the lower nibble pins, P5.0–P5.3.

There are two input mode and two output mode: Schmitt trigger input, schmitt trigger input with pull-up resistor, Push-pull output and Open-drain output.

In normal operating mode a reset operation clears all P5CON register values to "0" , this configures Port 5 pins to schmitt trigger input. If you want to configure an external memory area, you can use routine to set the P5CON value to “01000100B”. This setting correctly configures address lines A0–A7.

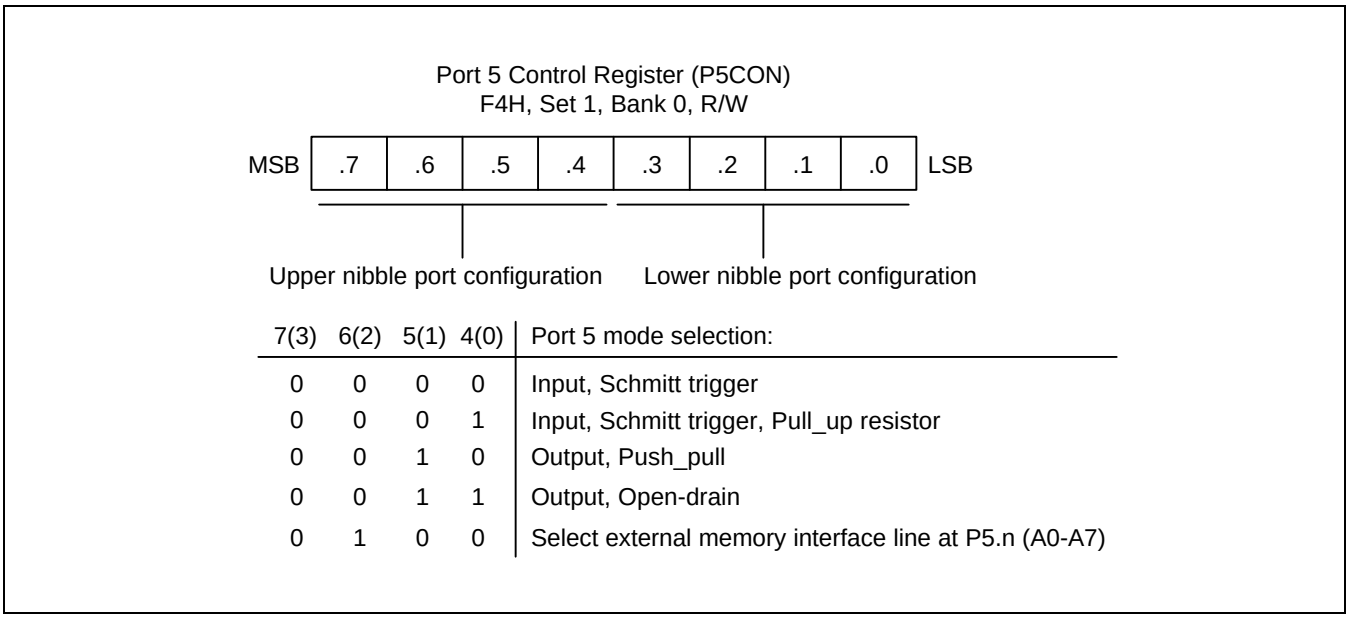

7(3)	6(2)	5(1)	4(0)	Port 5 mode selection:
0	0	0	0	Input, Schmitt trigger
0	0	0	1	Input, Schmitt trigger, Pull_up resistor
0	0	1	0	Output, Push_pull
0	0	1	1	Output, Open-drain
0	1	0	0	Select external memory interface line at P5.n (A0-A7)

Figure 9-14. Port 5 Control Register (P5CON)

PORT 6

Port 6 is basically identical to port 4, except that its alternate use is as the address lines (A8– A15) for the external interface. (Port 4 can alternately be configures as the data lines D0–D7.)

Port 6 can be configured on a nibble basis for general data input or output. Port 6 can serve either as a general-purpose 8-bit I/O port or alternative functions (A8–A15 for the external peripheral interface). It is possible to configure the lower nibble as external interface address lines A8–A11, and to use the upper nibble pins for general I/O.

Port 6 is accessed directly by writing or reading the Port 6 data register, P6 (R230, E6H) in set 1. You can use port 6 for general I/O, or for the alternative functions by P6CON setting “0100B” for each nibble configures the pins as external interface lines.

The port 6 data register cannot be written, however, when port 6 bits are configured as address lines for the external interface: writes have no effect and reads only return the state of the pin.

Port 6 Control Registers (P6CON)

The direction of each port pin is configured by nibble settings in Port 6 control register: P6CON (F5H, set 1). P6CON controls pins P6.0–P6.7 (pins 4–11). Port 6 control registers is read-write addressable using 8-bit instructions.

The P6CON setting “0100B” for each nibble configures the pins as external interface lines. Bits 4–7 of P6CON control the upper nibble pins, P6.4–P6.7, and bits 0–3 of P6CON control the lower nibble pins, P6.0–P6.3.

There are two input mode and two output mode: Schmitt trigger input, schmitt trigger input with pull-up resistor, Push-pull output and Open-drain output.

In normal operating mode a reset operation clears all P6CON register values to "0" , this configures Port 6 pins to schmitt trigger input. If you want to configure an external memory area, you can use routine to set the P6CON value to “01000100B”. This setting correctly configures address lines A8–A15.

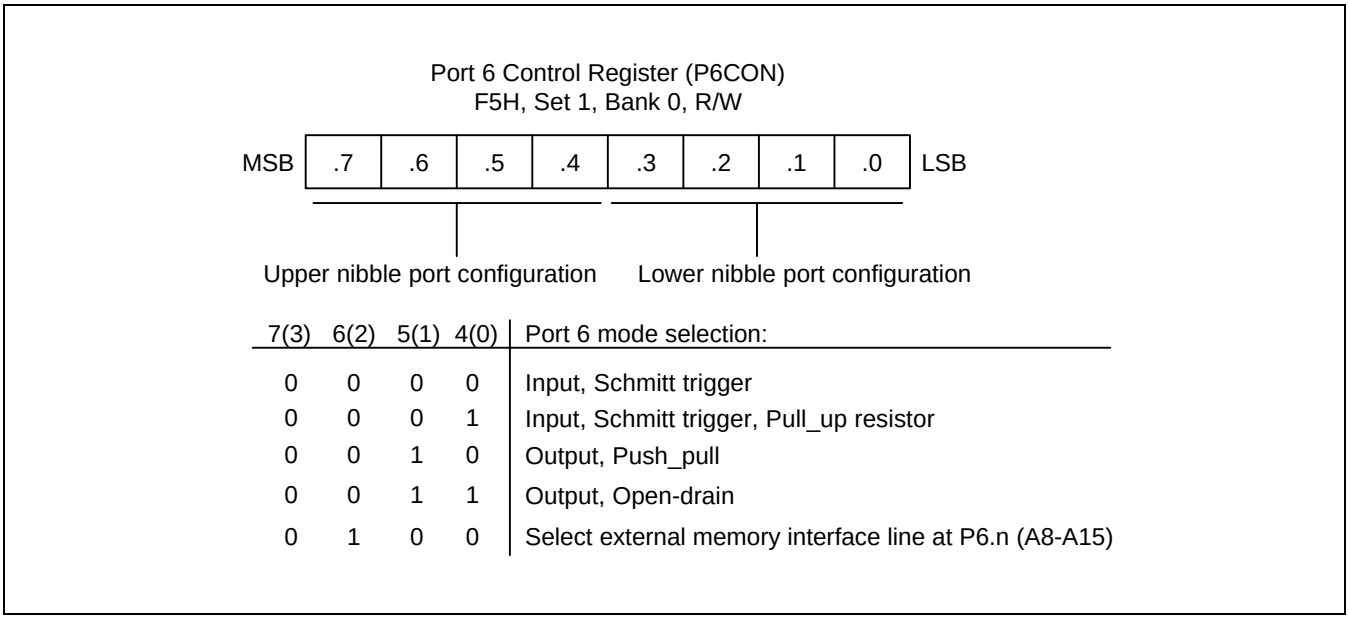

7(3)	6(2)	5(1)	4(0)	Port 6 mode selection:
0	0	0	0	Input, Schmitt trigger
0	0	0	1	Input, Schmitt trigger, Pull_up resistor
0	0	1	0	Output, Push_pull
0	0	1	1	Output, Open-drain
0	1	0	0	Select external memory interface line at P6.n (A8-A15)

Figure 9-15. Port 6 Control Register (P6CON)

PORT 7

Port 7 is an 8-bit I/O port with individually configurable pins. Port 7 is accessed directly by writing or reading the Port 7 data register, P7 (R237, EDH) in set 1. You can use port 1 for general I/O.

Port 7 Control Registers (P7CONH, P7CONL)

The direction of each port pin is configured by bit-pair settings in two control registers: P7CONH (high byte, F8H, set 1) and P7CONL (low byte, F9H, set 1). P7CONH controls pins P7.4–P7.7 and P7CONL controls pins P7.0–P7.3. Both registers are read-write addressable using 8-bit instructions.

There are two input mode and two output mode: Schmitt trigger input, schmitt trigger input with pull-up resistor, Push-pull output and Open-drain output.

A reset clears all P7CONH and P7CONL bits to logic zero. This configures Port 7 pins to schmitt trigger input.

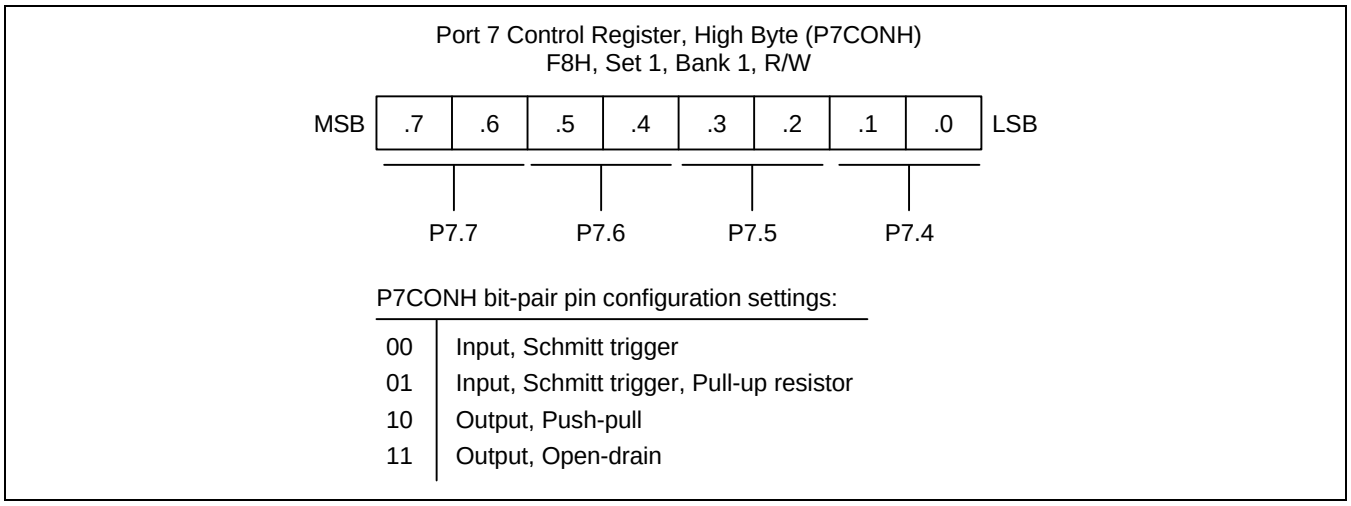

Figure 9-16. Port 7 High-Byte Control Register (P7CONH)

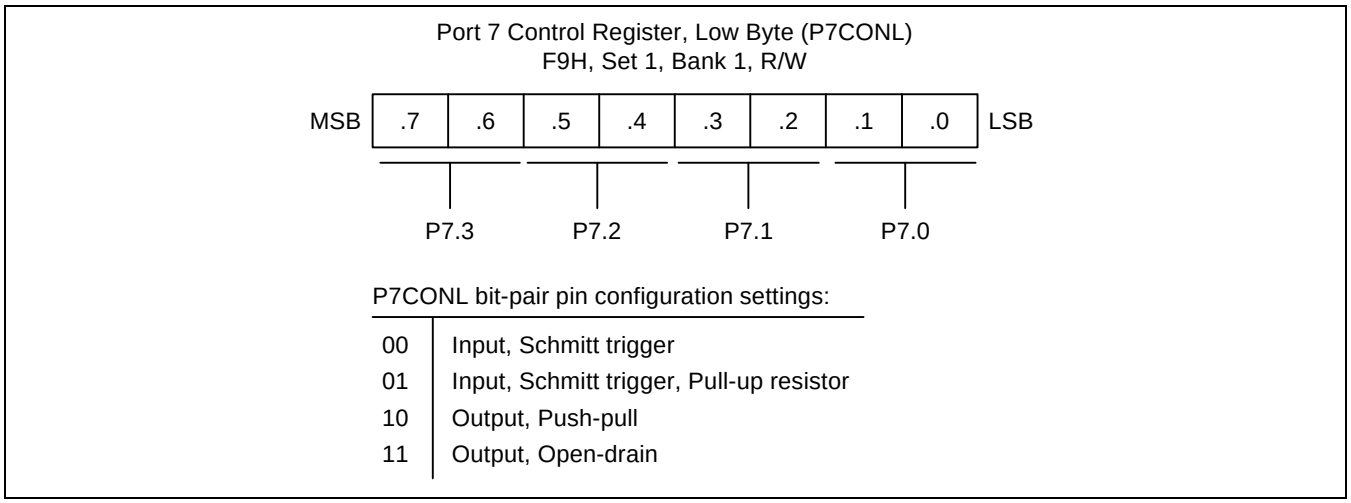

Figure 9-17. Port 7 Low-Byte Control Register (P7CONL)

PORT 8

Port 8 is an 8-bit I/O port with individually configurable pins. Port 8 is accessed directly by writing or reading the Port 8 data register, P8 (R245, F5H) in set 1. You can use port 8 for general I/O.

Port 8 Control Registers (P8CONH, P8CONL)

The direction of each port pin is configured by bit-pair settings in two control registers: P8CONH (high byte, FAH, set 1) and P8CONL (low byte, FBH, set 1). P8CONH controls pins P8.4–P8.7 and P8CONL controls pins P8.0–P8.3. Both registers are read-write addressable using 8-bit instructions.

There are two input mode and two output mode: Schmitt trigger input, schmitt trigger input with pull-up resistor, Push-pull output and Open-drain output.

A reset clears all P8CONH and P8CONL bits to logic zero. This configures Port 8 pins to schmitt trigger input.

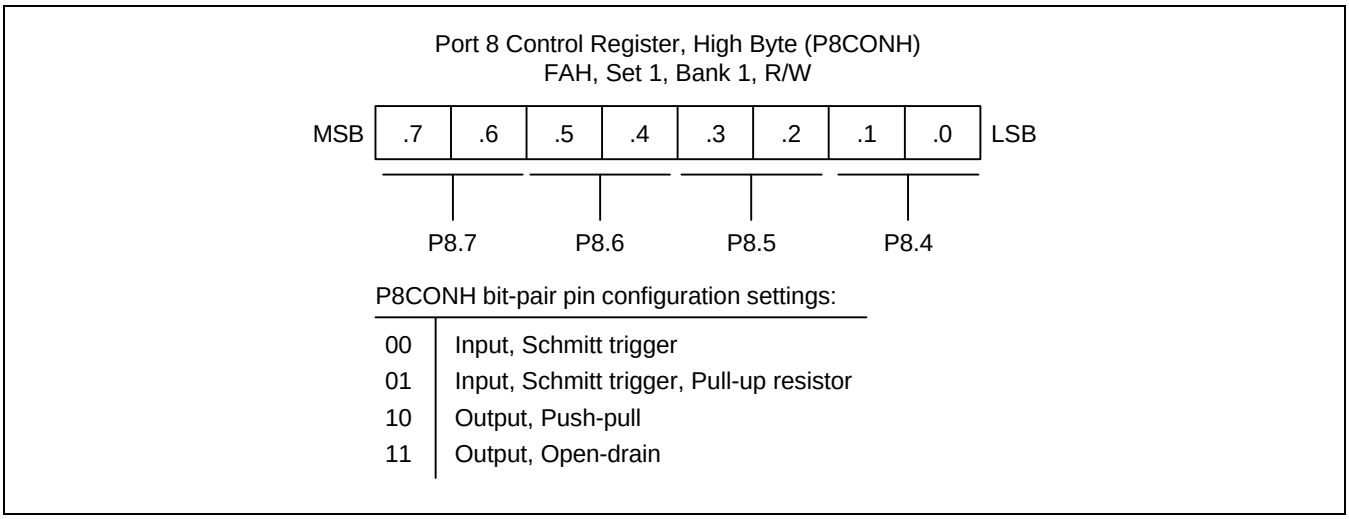

Figure 9-18. Port 8 High-Byte Control Register (P8CONH)

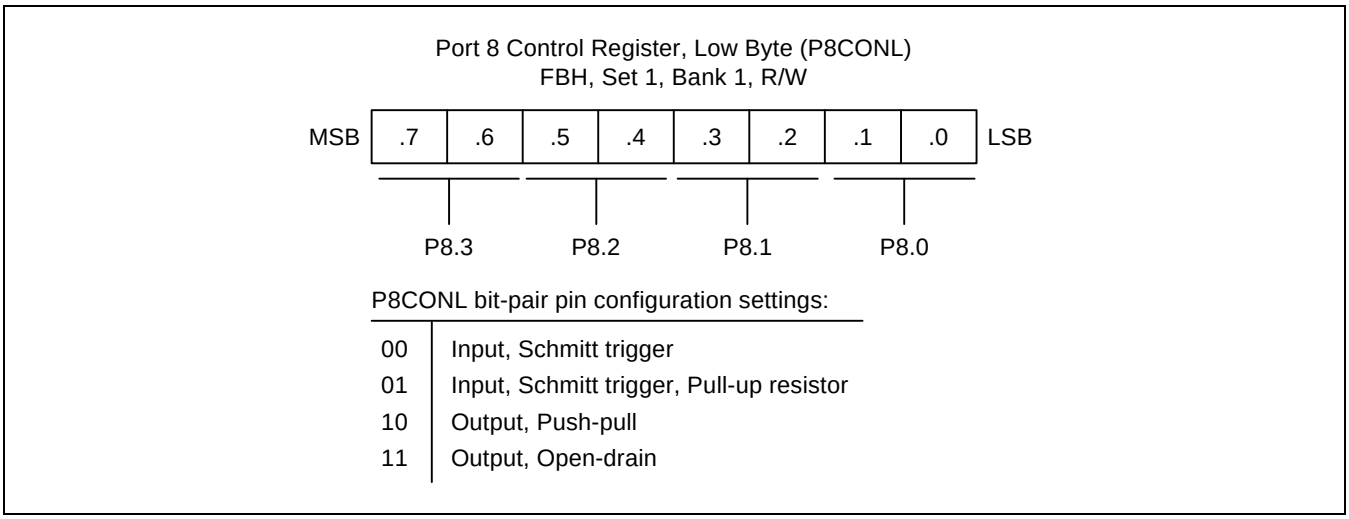

Figure 9-19. Port 8 Low-Byte Control Register (P8CONL)

PORT 9

Port 9 is an 8-bit I/O port with individually configurable pins. Port 9 is accessed directly by writing or reading the Port 9 data register, P9 (R246, F6H) in set 1. You can use port 9 for general I/O.

Port 9 Control Registers (P9CONH, P9CONL)

The direction of each port pin is configured by bit-pair settings in two control registers: P9CONH (high byte, FCH, set 1) and P9CONL (low byte, FDH, set 1). P9CONH controls pins P9.4–P9.7 and P9CONL controls pins P9.0–P9.3. Both registers are read-write addressable using 8-bit instructions.

There are two input mode and two output mode: Schmitt trigger input, schmitt trigger input with pull-up resistor, Push-pull output and Open-drain output.

A reset clears all P9CONH and P9CONL bits to logic zero. This configures Port 9 pins to schmitt trigger input.

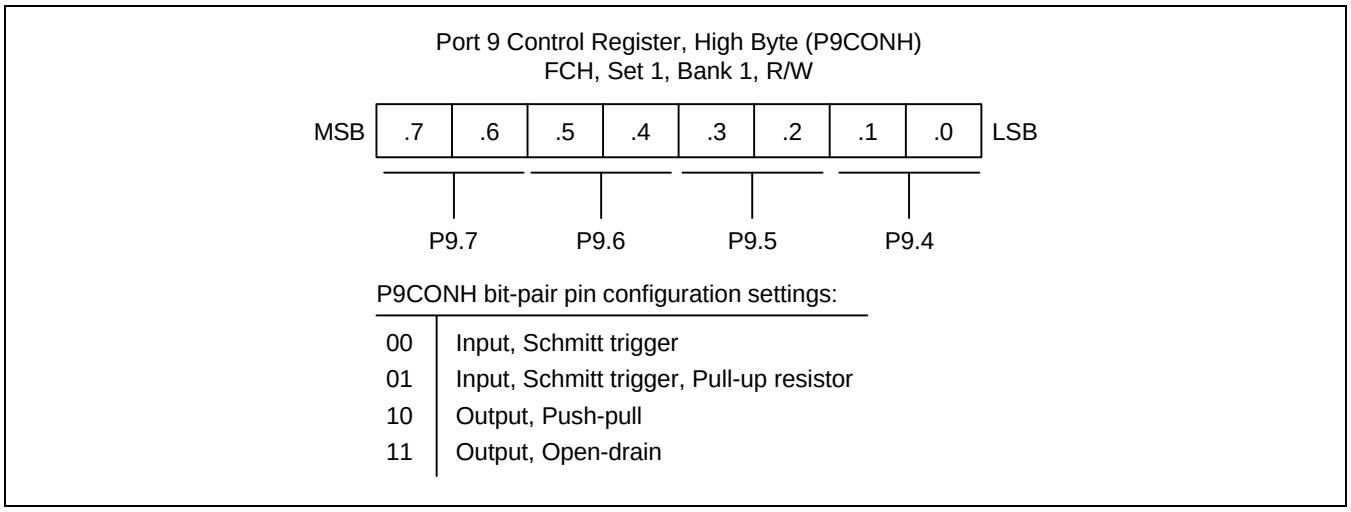

Figure 9-20. Port 9 High-Byte Control Register (P9CONH)

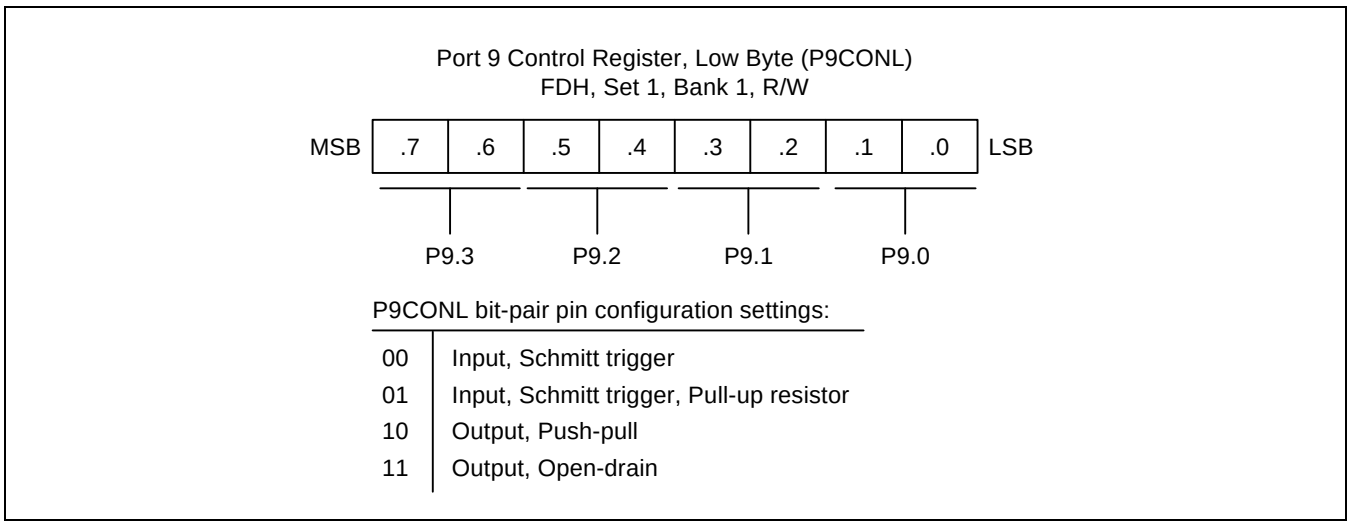

Figure 9-21. Port 9 Low-Byte Control Register (P9CONL)

PORT 10

Port 10 is an 8-bit I/O port with individually configurable pins. Port 10 is accessed directly by writing or reading the Port 10 data register, P10 (R247, F7H) in set 1. You can use port 10 for general I/O.

Port 10 Control Registers (P10CONH, P10CONL)

The direction of each port pin is configured by bit-pair settings in two control registers: P10CONH (high byte, FEH, set 1) and P10CONL (low byte, FFH, set 1). P10CONH controls pins P10.4–P10.7 and P10CONL controls pins P10.0–P10.3. Both registers are read-write addressable using 8-bit instructions.

There are two input mode and two output mode: Schmitt trigger input, schmitt trigger input with pull-up resistor, Push-pull output and Open-drain output.

A reset clears all P10CONH and P10CONL bits to logic zero. This configures Port 10 pins to schmitt trigger input.

Port 10 Control Register, High Byte (P10CONH)
FEH, Set 1, Bank 1, R/W

MSB	.7	.6	.5	.4	.3	.2	.1	.0	LSB

P10.7 P10.6 P10.5 P10.4

P10CONH bit-pair pin configuration settings:

00	Input, Schmitt trigger
01	Input, Schmitt trigger, Pull-up resistor
10	Output, Push-pull
11	Output, Open-drain

Figure 9-22. Port 10 High-Byte Control Register (P10CONH)

Port 10 Control Register, Low Byte (P10CONL)
FFH, Set 1, Bank 1, R/W

MSB	.7	.6	.5	.4	.3	.2	.1	.0	LSB

P10.3 P10.2 P10.5 P10.0

P10CONL bit-pair pin configuration settings:

00	Input, Schmitt trigger
01	Input, Schmitt trigger, Pull-up resistor
10	Output, Push-pull
11	Output, Open-drain

Figure 9-23. Port 10 Low-Byte Control Register (P10CONL)

NOTES

10 BASIC TIMER and TIMER 0

MODULE OVERVIEW

The S3C852B has two default timers: an 8-bit *basic timer* and one 8-bit general-purpose timer/counter. The 8-bit timer/counter is called *timer 0.*

Basic Timer (BT)

You can use the basic timer (BT) in two different ways:

— As a watchdog timer to provide an automatic reset mechanism in the event of a system malfunction.
— To signal the end of the required oscillation stabilization interval after a reset or a stop mode release.

The functional components of the basic timer block are:

— Clock frequency divider (fxx divided by 4096, 1024, 128, or 16) with multiplexer
— 8-bit basic timer counter, BTCNT (set 1, bank 0, FDH, read-only)
— Basic timer control register, BTCON (set 1, D3H, read/write)

BASIC TIMER CONTROL REGISTER (BTCON)

The basic timer control register, BTCON, is used to select the input clock frequency, to clear the basic timer counter and frequency dividers, and to enable or disable the watchdog timer function. It is located in set 1, address D3H, and is read/write addressable using Register addressing mode.

A reset clears BTCON to “00H”. This enables the watchdog function and selects a basic timer clock frequency of fxx/4096. To disable the watchdog function, you must write the signature code “1010B” to the basic timer register control bits BTCON.7–BTCON.4.

The 8-bit basic timer counter, BTCNT (set 1, bank 0, FDH), can be cleared at any time during normal operation by writing a "1" to BTCON.1. To clear the frequency dividers for both the basic timer input clock, you write a "1" to BTCON.0.

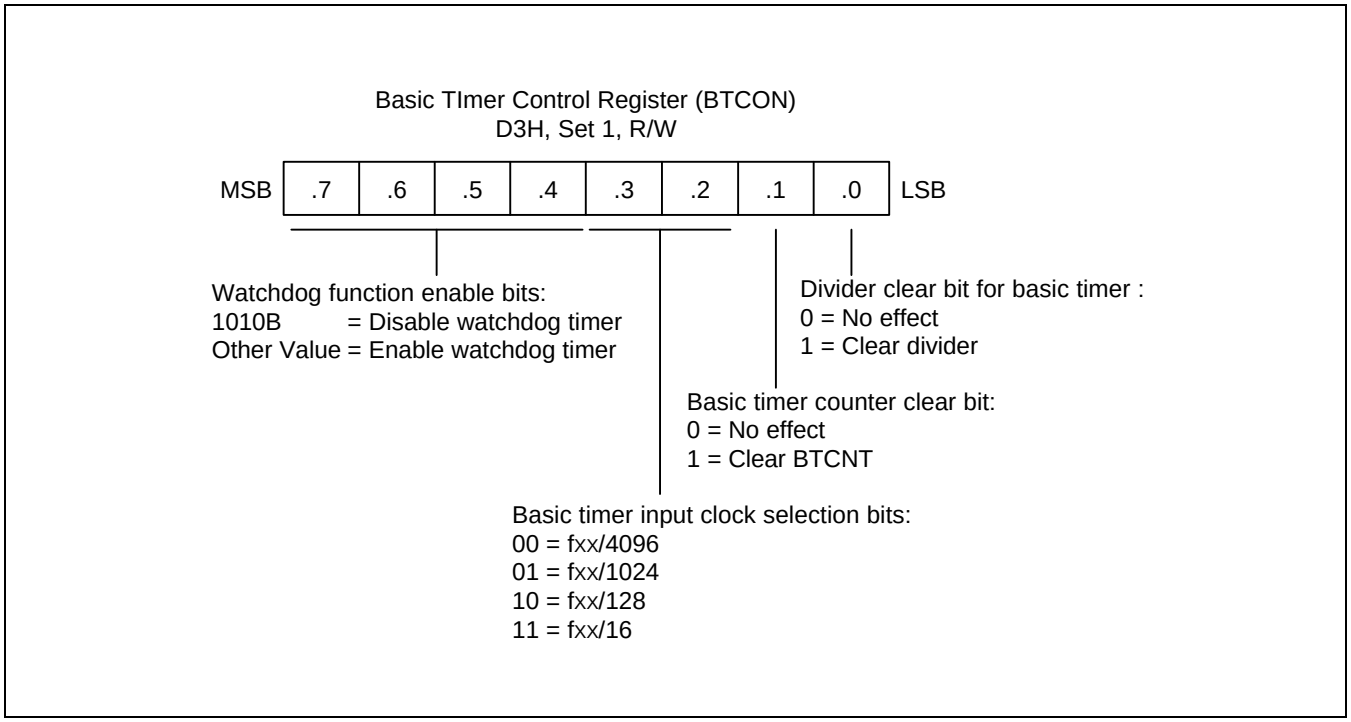

Figure 10-1. Basic Timer Control Register (BTCON)

BASIC TIMER FUNCTION DESCRIPTION

Watchdog Timer Function

You can program the basic timer overflow signal (BTOVF) to generate a reset by setting BTCON.7–BTCON.4 to any value other than “1010B”. (The “1010B” value disables the watchdog function.) A reset clears BTCON to “00H”, automatically enabling the watchdog timer function. A reset also selects the CPU clock (as determined by the current CLKCON register setting), divided by 4096, as the BT clock.

A reset whenever a basic timer counter overflow occurs. During normal operation, the application program must prevent the overflow, and the accompanying reset operation, from occurring. To do this, the BTCNT value must be cleared (by writing a "1" to BTCON.1) at regular intervals.

If a system malfunction occurs due to circuit noise or some other error condition, the BT counter clear operation will not be executed and a basic timer overflow will occur, initiating a reset. In other words, during normal operation, the basic timer overflow loop (a bit 7 overflow of the 8-bit basic timer counter, BTCNT) is always broken by a BTCNT clear instruction. If a malfunction does occur, a reset is triggered automatically.

Oscillation Stabilization Interval Timer Function

You can also use the basic timer to program a specific oscillation stabilization interval following a reset or when stop mode has been released by an external interrupt.

In stop mode, whenever a reset or an internal and an external interrupt occurs, the oscillator starts. The BTCNT value then starts increasing at the rate of fxx/4096 (for reset), or at the rate of the preset clock source (for an internal and an external interrupt). When BTCNT.3 overflows, a signal is generated to indicate that the stabilization interval has elapsed and to gate the clock signal off to the CPU so that it can resume normal operation.

In summary, the following events occur when stop mode is released:

1. During stop mode, a power-on reset or an internal and an external interrupt occurs to trigger the stop mode release and oscillation starts.
2. If a power-on reset occurred, the basic timer counter will increase at the rate of fxx/4096. If an internal and an external interrupt is used to release stop mode, the BTCNT value increases at the rate of the preset clock source.
3. Clock oscillation stabilization interval begins and continues until bit 3 of the basic timer counter overflows.
4. When a BTCNT.3 overflow occurs, normal CPU operation resumes.

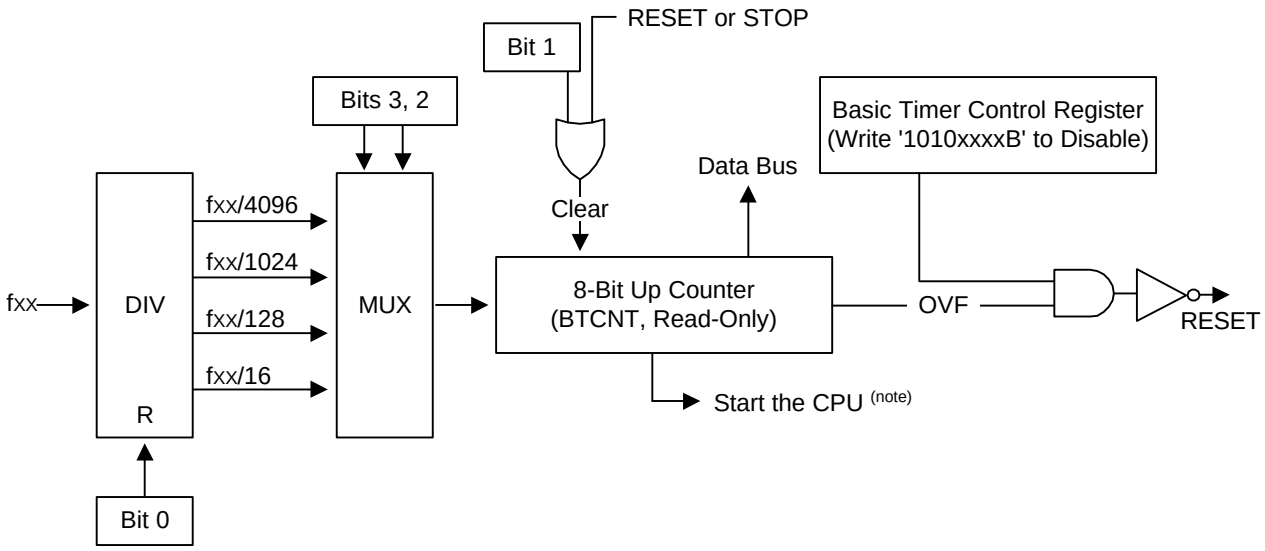

NOTE: During a power-on reset operation, the CPU is idle during the required oscillation stabilization interval (until bit 4 of the basic timer counter overflows).

Figure 10-2. Basic Timer Block Diagram

8-Bit Timer 0

Timer 0 has three operating modes, one of which you select using the appropriate T0CON setting:

— Interval timer mode
— Capture input mode with a rising or falling edge trigger at the P0.3 pin
— PWM mode

Timer 0 has the following functional components:

— Clock frequency divider (fxx divided by 1024, 256, or 64) with multiplexer
— External clock input pin (P0.2, T0CK)
— 8-bit counter (T0CNT), 8-bit comparator, and 8-bit reference data register (T0DATA)
— I/O pins for capture input or match output (P0.3, T0)
— Timer 0 overflow interrupt (IRQ0, vector FAH) and match/capture interrupt (IRQ0, vector FCH) generation
— Timer 0 control register, T0CON (set 1, D2H, read/write)

TIMER 0 CONTROL REGISTER (T0CON)

You use the timer 0 control register, T0CON, to

— Select the timer 0 operating mode (interval timer, capture mode, or PWM mode)
— Select the timer 0 input clock frequency
— Clear the timer 0 counter, T0CNT
— Enable the timer 0 overflow interrupt or timer 0 match/capture interrupt
— Clear timer 0 match/capture interrupt pending conditions

T0CON is located in set 1, at address D2H, and is read/write addressable using Register addressing mode.

A reset clears T0CON to “00H”. This sets timer 0 to normal interval timer mode, selects an input clock frequency of fxx/1024, and disables all timer 0 interrupts. You can clear the timer 0 counter at any time during normal operation by writing a "1" to T0CON.3.

The timer 0 overflow interrupt (T0OVF) is interrupt level IRQ0 and has the vector address FAH. When a timer 0 overflow interrupt occurs and is serviced by the CPU, the pending condition is cleared automatically by hardware.

To enable the timer 0 match/capture interrupt (IRQ0, vector FCH), you must write T0CON.1 to "1". To detect a match/capture interrupt pending condition, the application program polls T0CON.0. When a "1" is detected, a timer 0 match or capture interrupt is pending. When the interrupt request has been serviced, the pending condition must be cleared by software by writing a "0" to the timer 0 interrupt pending bit, T0CON.0.

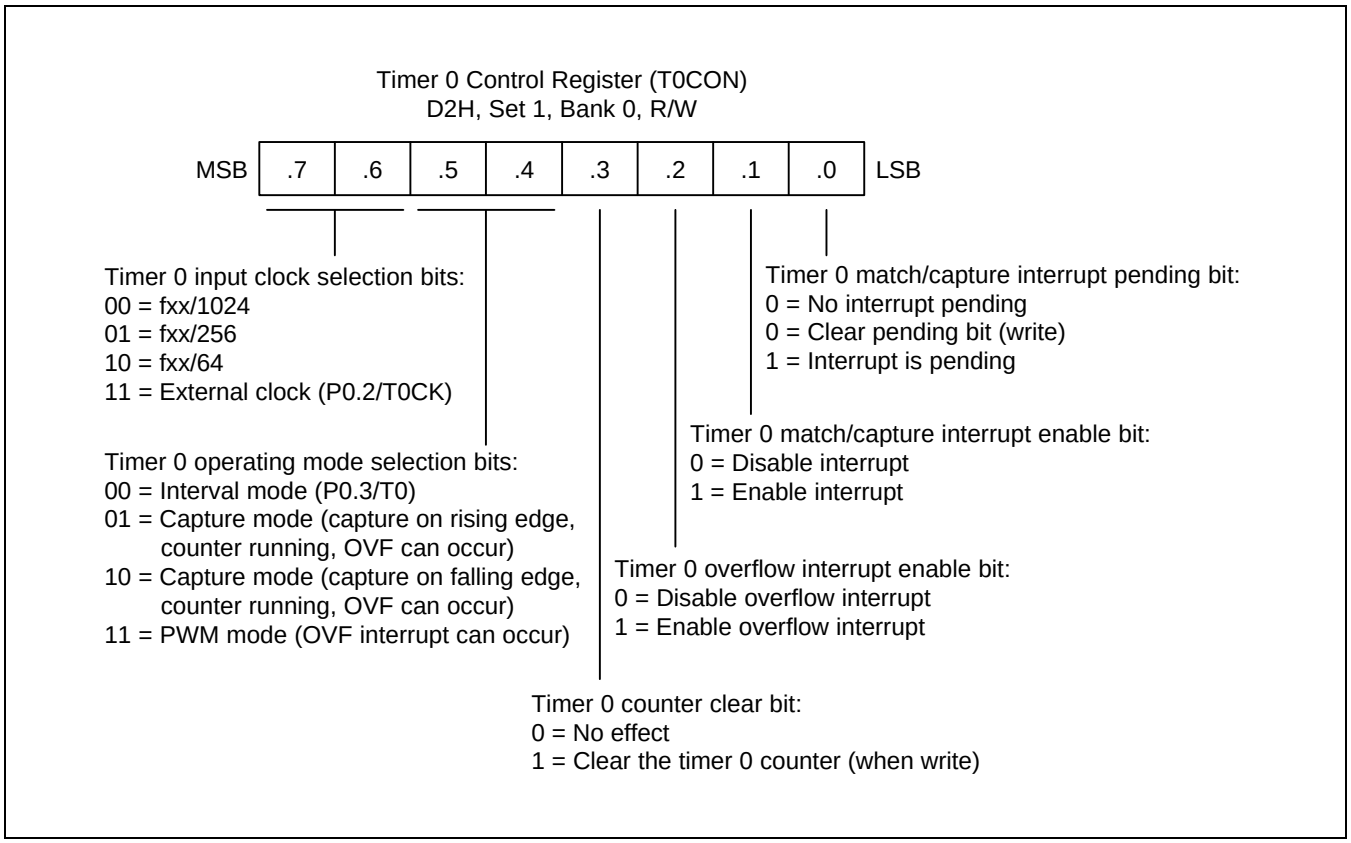

Figure 10-3. Timer 0 Control Register (T0CON)

TIMER 0 FUNCTION DESCRIPTION

Timer 0 Interrupts (IRQ0, Vectors FAH and FCH)

The timer 0 module can generate two interrupts: the timer 0 overflow interrupt (T0OVF), and the timer 0 match/ capture interrupt (T0INT). T0OVF is interrupt level IRQ0, vector FAH. T0INT also belongs to interrupt level IRQ0, but is assigned the separate vector address, FCH.

A timer 0 overflow interrupt pending condition is automatically cleared by hardware when it has been serviced. However, the timer 0 match/capture interrupt pending condition must be cleared by the application's interrupt service routine by writing a "0" to the T0CON.0 interrupt pending bit.

Interval Timer Mode

In interval timer mode, a match signal is generated when the counter value is identical to the value written to the timer 0 reference data register, T0DATA. The match signal generates a timer 0 match interrupt (T0INT, vector FCH) and clears the counter.

If, for example, you write the value "10H" to T0DATA, the counter will increment until it reaches "10H". At this point, the timer 0 interrupt request is generated, the counter value is reset, and counting resumes. With each match, the level of the signal at the timer 0 output pin is inverted (see Figure 10-4).

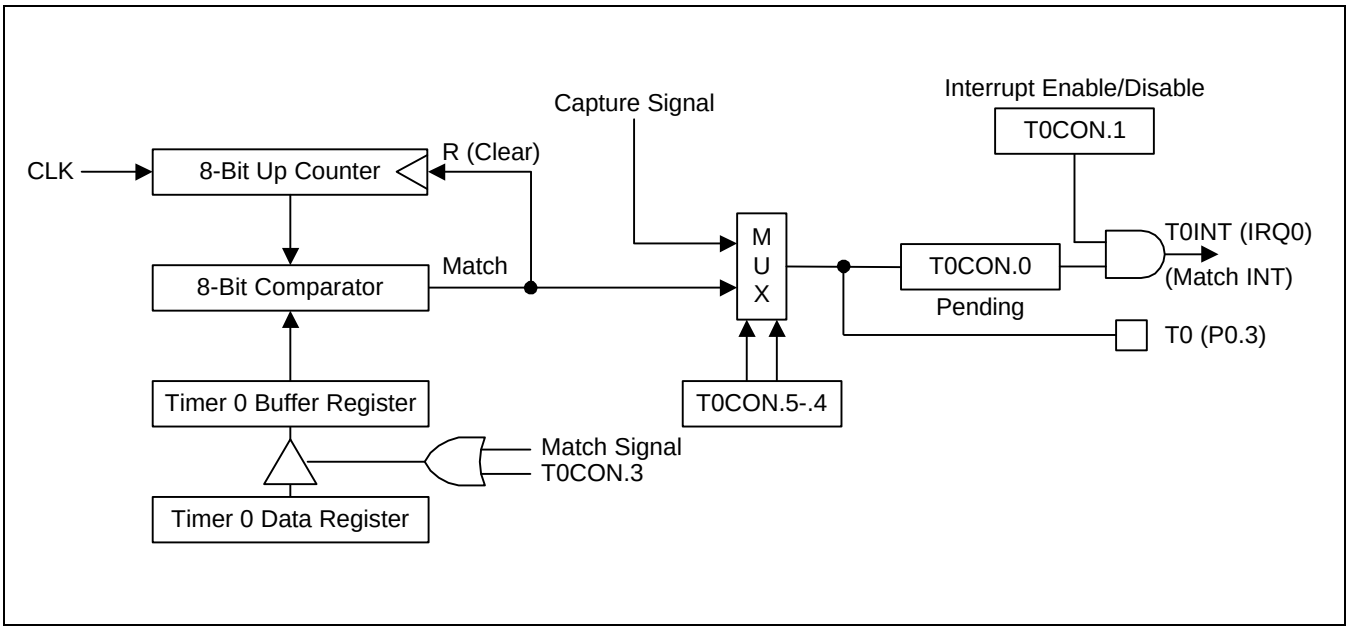

Figure 10-4. Simplified Timer 0 Function Diagram: Interval Timer Mode

Pulse Width Modulation Mode

Pulse width modulation (PWM) mode lets you program the width (duration) of the pulse that is output at the T0 (P0.3) pin. As in interval timer mode, a match signal is generated when the counter value is identical to the value written to the timer 0 data register. In PWM mode, however, the match signal does not clear the counter. Instead, it runs continuously, overflowing at "FFH", and then continues incrementing from "00H".

Although you can use the match signal to generate a timer 0 overflow interrupt, interrupts are not typically used in PWM-type applications. Instead, the pulse at the T0 (P0.3) pin is held to Low level as long as the reference data value is *less than or equal to* (≤) the counter value and then the pulse is held to High level for as long as the data value is *greater than* (>) the counter value. One pulse width is equal to $t_{CLK} \times 256$ (see Figure 10-5).

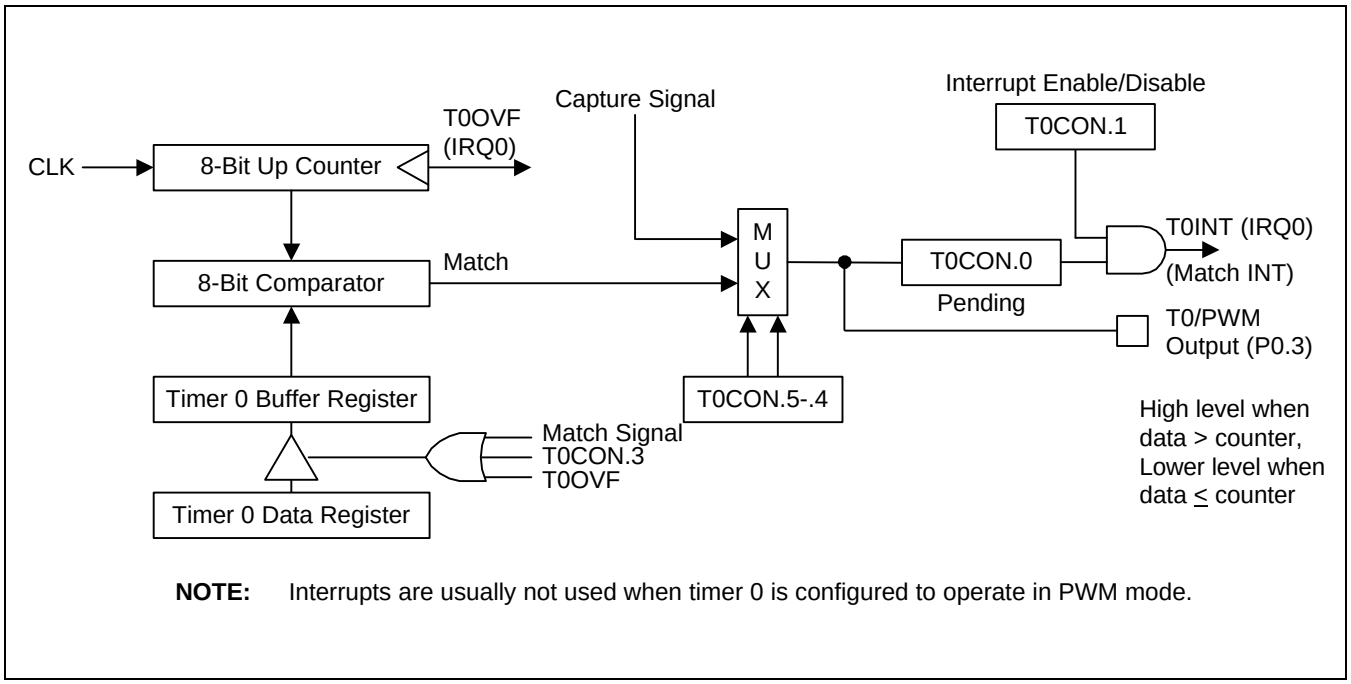

NOTE: Interrupts are usually not used when timer 0 is configured to operate in PWM mode.

Figure 10-5. Simplified Timer 0 Function Diagram: PWM Mode

Capture Mode

In capture mode, a signal edge that is detected at the T0CAP (P0.3) pin opens a gate and loads the current counter value into the timer 0 data register. You can select rising or falling edges to trigger this operation.

Timer 0 also gives you capture input source: the signal edge at the T0CAP (P0.3) pin. You select the capture input by setting the values of the timer 0 capture input selection bits in the port 0 control register, P0CONL.7–.6, (set 1, bank 0, EBH). When P0CONL.7–.6 is "00" or "01", the T0CAP input is selected.

Both kinds of timer 0 interrupts can be used in capture mode: the timer 0 overflow interrupt is generated whenever a counter overflow occurs; the timer 0 match/capture interrupt is generated whenever the counter value is loaded into the timer 0 data register.

By reading the captured data value in T0DATA, and assuming a specific value for the timer 0 clock frequency, you can calculate the pulse width (duration) of the signal that is being input at the T0CAP pin (see Figure 10-6).

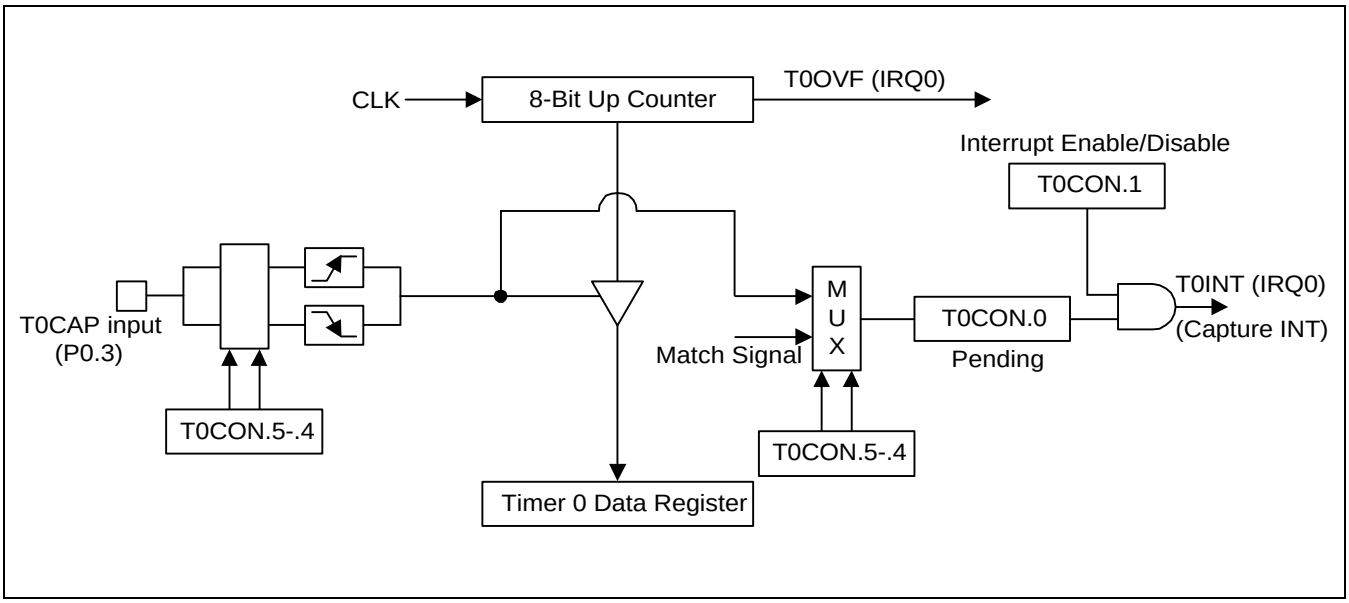

Figure 10-6. Simplified Timer 0 Function Diagram: Capture Mode

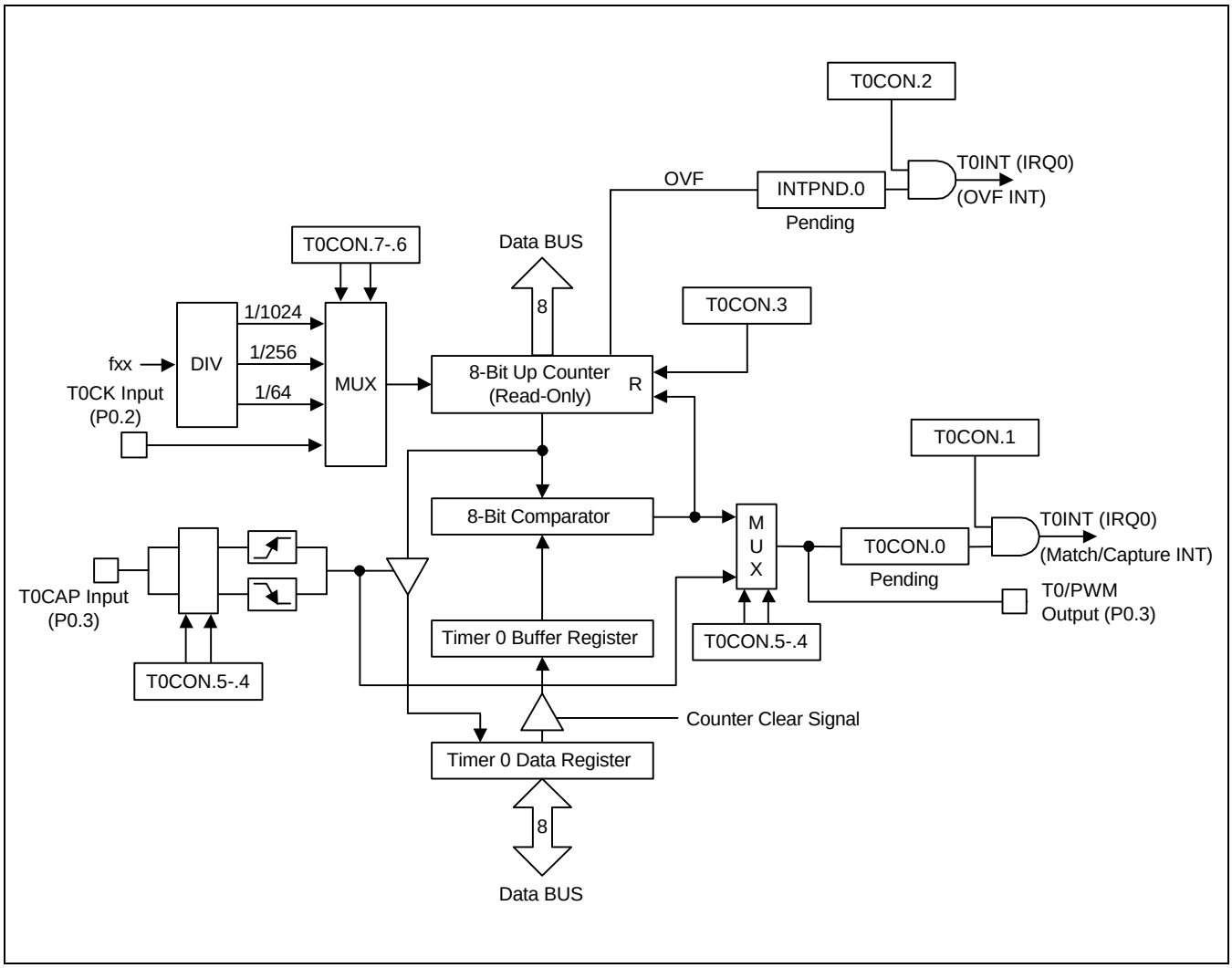

Figure 10-7. Timer 0 Block Diagram

☞ PROGRAMMING TIP — Configuring the Basic Timer

This example shows how to configure the basic timer to sample specifications:

```
            ORG     0100H

RESET       DI                      ;  Disable all interrupts
            LD      BTCON,#0AAH     ;  Disable the watchdog timer
            LD      CLKCON,#18H     ;  Non-divided clock
            CLR     SYM             ;  Disable global and fast interrupts
            CLR     SPL             ;  Stack pointer low byte ← "0"
                                    ;  Stack area starts at 0FFH
            •
            •
            •
            SRP     #0C0H           ;  Set register pointer ← 0C0H
            EI                      ;  Enable interrupts
            •
            •
            •
MAIN        LD      BTCON,#52H      ;  Enable the watchdog timer
                                    ;  Basic timer clock: fxx/4096
                                    ;  Clear basic timer counter
            NOP
            NOP
            •
            •
            •
            JP      T,MAIN
            •
            •
            •
```

☞ PROGRAMMING TIP — Programming Timer 0

This sample program sets timer 0 to interval timer mode, sets the frequency of the oscillator clock, and determines the execution sequence which follows a timer 0 interrupt. The program parameters are as follows:

— Timer 0 is used in interval mode; the timer interval is set to 4 milliseconds

— Oscillation frequency is 4 MHz

— General register 64H (page 0) ← 60H + 62H + 63H + 64H (page 0) + 1H (value) is executed after a timer 0 interrupt

```
          ORG     0FAH            ;  Timer 0 overflow interrupt
          VECTOR  T0OVER
          ORG     0FCH            ;  Timer 0 match/capture interrupt
          VECTOR  T0INT
          ORG     0100H

RESET     DI                      ;  Disable all interrupts
          LD      BTCON,#0AAH     ;  Disable the watchdog timer
          LD      CLKCON,#18H     ;  Select non-divided clock
          CLR     SYM             ;  Disable global and fast interrupts
          CLR     SPL             ;  Stack pointer low byte ← "0"
                                  ;  Stack area starts at 0FFH
          •
          •
          •
          LD      T0CON,#4AH      ;  Write “01001010B”
                                  ;  Input clock is fxx/256
                                  ;  Interval timer mode
                                  ;  Enable the timer 0 interrupt
                                  ;  Disable the timer 0 overflow interrupt
          LD      T0DATA,#3FH     ;  Set timer interval to 4 milliseconds
                                  ;  (4 MHz/256) ÷ (62.5 + 1)  =  0.25 kHz (4 ms)

          SRP     #0C0H           ;  Set register pointer ← 0C0H
          EI                      ;  Enable interrupts
          •
          •
          •
T0INT     PUSH    RP0             ;  Save RP0 to stack
          SRP0    #60H            ;  RP0 ← 60H
          INC     R0              ;  R0 ← R0 + 1
          ADD     R2,R0           ;  R2 ← R2 + R0
          ADC     R3,R2           ;  R3 ← R3 + R2 + Carry
          ADC     R4,R3           ;  R4 ← R4 + R3 + Carry
```

(Continued on next page)

☞ PROGRAMMING TIP — Programming Timer 0 (Continued)

```
CP          R0,#32H                     ;  50 × 4 = 200 ms
            JR          ULT,NO_200MS_SET
            BITS        R1.2            ;  Bit setting (61.2H)

NO_200MS_SET:
            LD          T0CON,#4AH      ;  Clear pending bit
            POP         RP0             ;  Restore register pointer 0 value

T0OVER      IRET                        ;  Return from interrupt service routine
```

NOTES

11 TIMER 1

ONE 16-BIT TIMER MODE (TIMER 1)

The 16-bit timer 1 is used in one 16-bit timer or two 8-bit timers mode. If TACON.7 is set to "1", as a 16-bit timer. If TACON.7 is set to "0", timer 1 is used as two 8-bit timers.

— One 16-bit timer mode (Timer 1)

— Two 8-bit timers mode (Timer A and B)

OVERVIEW

The 16-bit timer 1 is an 16-bit general-purpose timer. Timer 1 has the interval timer mode by using the appropriate TACON setting.

Timer 1 has the following functional components:

— Clock frequency divider (fxx divided by 1024, 512, 8, or 1 and T1CK: External clock) with multiplexer

— 16-bit counter (TACNT, TBCNT), 16-bit comparator, and 16-bit reference data register (TADATA, TBDATA)

— Timer 1 match interrupt (IRQ1, vector F4H) generation

— Timer 1 control register, TACON (set 1, bank 1, E4H, read/write)

FUNCTION DESCRIPTION

Interval Timer Function

The timer 1 module can generate an interrupt: the timer 1 match interrupt (T1INT). T1INT belongs to interrupt level IRQ1, and is assigned the separate vector address, F4H.

The T1INT pending condition should be cleared by software when it has been serviced. Even though T1INT is disabled, the application's service routine can detect a pending condition of T1INT by the software and execute it's sub-routine. When this case is used, the T1INT pending bit must be cleared by the application sub-routine by writing a "0" to the TACON.0 pending bit.

In interval timer mode, a match signal is generated when the counter value is identical to the values written to the timer 1 reference data registers, TADATA and TBDATA(FFH). The match signal generates a timer 1 match interrupt (T1INT, vector F4H) and clears the counter.

If, for example, you write the value 32H to TADATA, and 8EH to TACON, the counter will increment until it reaches 32FFH. At this point, the timer 1 interrupt request is generated, the counter value is reset, and counting resumes.

Timer 1 Control Register (TACON)

You use the timer 1 control register, TACON, to

— Enable the timer 1 operating (interval timer)

— Select the timer 1 input clock frequency

— Clear the timer 1 counter, TACNT and TBCNT

— Enable the timer 1 interrupt

— Clear timer 1 interrupt pending conditions

TACON is located in set 1, bank 1, at address E4H, and is read/write addressable using register addressing mode.

A reset clears TACON to "00H". This sets timer 1 to disable interval timer mode, selects an input clock frequency of fxx/1024, and disables timer 1 interrupt. You can clear the timer 1 counter at any time during normal operation by writing a "1" to TACON.3.

To enable the timer 1 interrupt (IRQ1, vector F4H), you must write TACON.7, TACON.2, and TACON.1 to "1". To generate the exact time interval, you should write TACON.3 and TACON.0, which cleared counter and interrupt pending bit. To detect an interrupt pending condition when T1INT is disabled, the application program polls pending bit, TACON.0. When a "1" is detected, a timer 1 interrupt is pending. When the T1INT sub-routine has been serviced, the pending condition must be cleared by software by writing a "0" to the timer 1 interrupt pending bit, TACON.0.

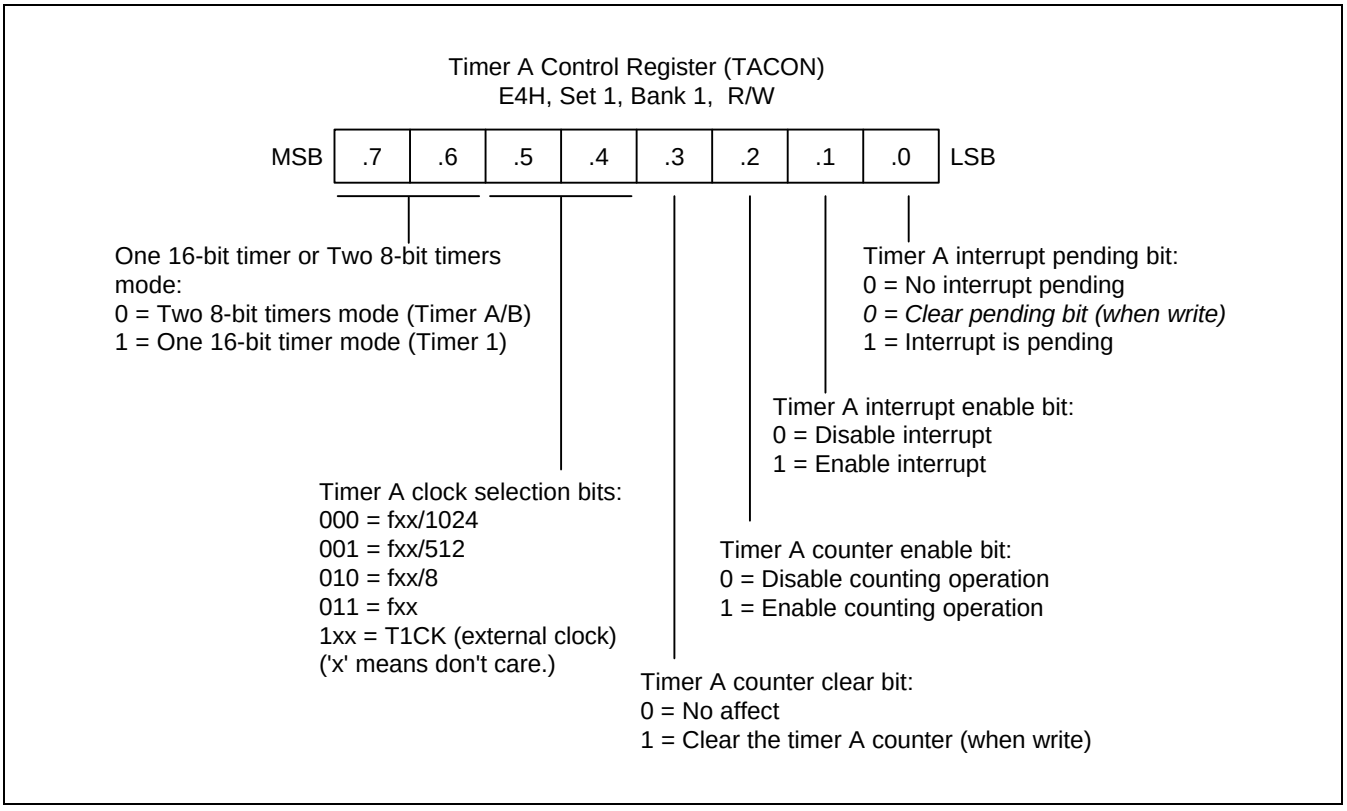

Figure 11-1. Timer 1 Control Register (TACON)

BLOCK DIAGRAM

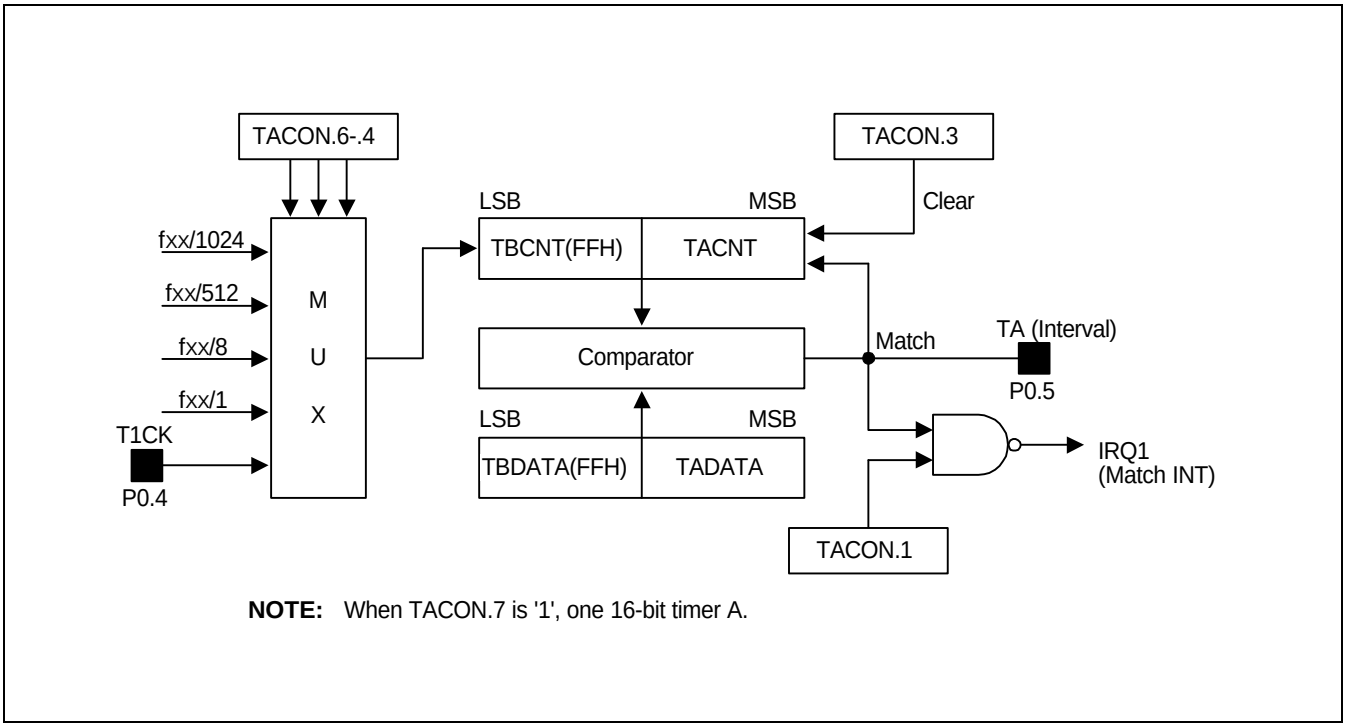

Figure 11-2. Timer 1 Functional Block Diagram

TWO 8-BIT TIMERS MODE (TIMER A and B)

OVERVIEW

The 8-bit timer A and B are the 8-bit general-purpose timers. Timer A have the interval timer mode, and the timer B have the interval timer mode and PWM mode by using the appropriate TACON and TBCON setting, respectively.

Timer A and B have the following functional components:

— Clock frequency divider with multiplexer
  – fxx divided by 1024, 512, 8, or 1 and T1CK (External clock) for timer A
  – fxx divided by 8, 4, 2, or 1 for timer B
— 8-bit counter (TACNT, TBCNT), 8-bit comparator, and 8-bit reference data register (TADATA, TBDATA)
— Timer A have I/O pin for match output (P0.5, TA)
— Timer A match interrupt (IRQ1, vector F4H) generation
— Timer A control register, TACON (set 1, bank 1, E4H, read/write)
— Timer B have I/O pin for match and PWM output (P0.6, TB)
— Timer B overflow interrupt (IRQ1, vector F6H) generation
— Timer B match interrupt (IRQ1, vector F8H) generation
— Timer B control register, TBCON (set 1, bank 1, E5H, read/write)

Timer A and B Control Register (TACON, TBCON)

You use the timer A and B control register, TACON and TBCON, to

— Enable the timer A (interval timer mode) and B operating (interval timer mode and PWM mode)
— Select the timer A and B input clock frequency
— Clear the timer A and B counter, TACNT and TBCNT
— Enable the timer A and B interrupt
— Clear timer A and B interrupt pending conditions

TACON and TBCON are located in set 1, bank 1, at address E4H and E5H, and is read/write addressable using register addressing mode.

A reset clears TACON to "00H". This sets timer A to disable interval timer mode, selects an input clock frequency of fxx/1024, and disables timer A interrupt. You can clear the timer A counter at any time during normal operation by writing a "1" to TACON.3.

A reset clears TBCON to "00H". This sets timer B to disable interval timer mode and PWM mode, selects an input clock frequency of fxx/8, and disables timer A interrupt. You can clear the timer B counter at any time during normal operation by writing a "1" to TBCON.3.

To enable the timer A interrupt (TAINT) and timer B interrupt (TBINT), (IRQ1, vector F4H, F8H), you must write TACON.7 to "0", TACON.2 (TBCON.2) and TACON.1 (TBCON.1) to "1". To generate the exact time interval, you should write TACON.3 (TBCON.3) and TACON.0 (INTPND.2), which cleared counter and interrupt pending bit. To detect an interrupt pending condition when TAINT and TBINT is disabled, the application program polls pending bit, TACON.0 and INTPND.2. When a "1" is detected, a timer A interrupt (TAINT) and timer B interrupt (TBINT) is pending. When the TAINT and TBINT sub-routine has been serviced, the pending condition must be cleared by software by writing a "0" to the timer A and B interrupt pending bit, TACON.0 and INTPND.2.

Also, to enable timer B overflow interrupt (TBOVF), (IRQ1, vector F6H), you must write TACON.7 to "0", TBCON.2 and TBCON.0 to "1". To generate the exact time interval, you should write TBCON.3 and INTPND.2, witch cleared counter and interrupt pending bit.

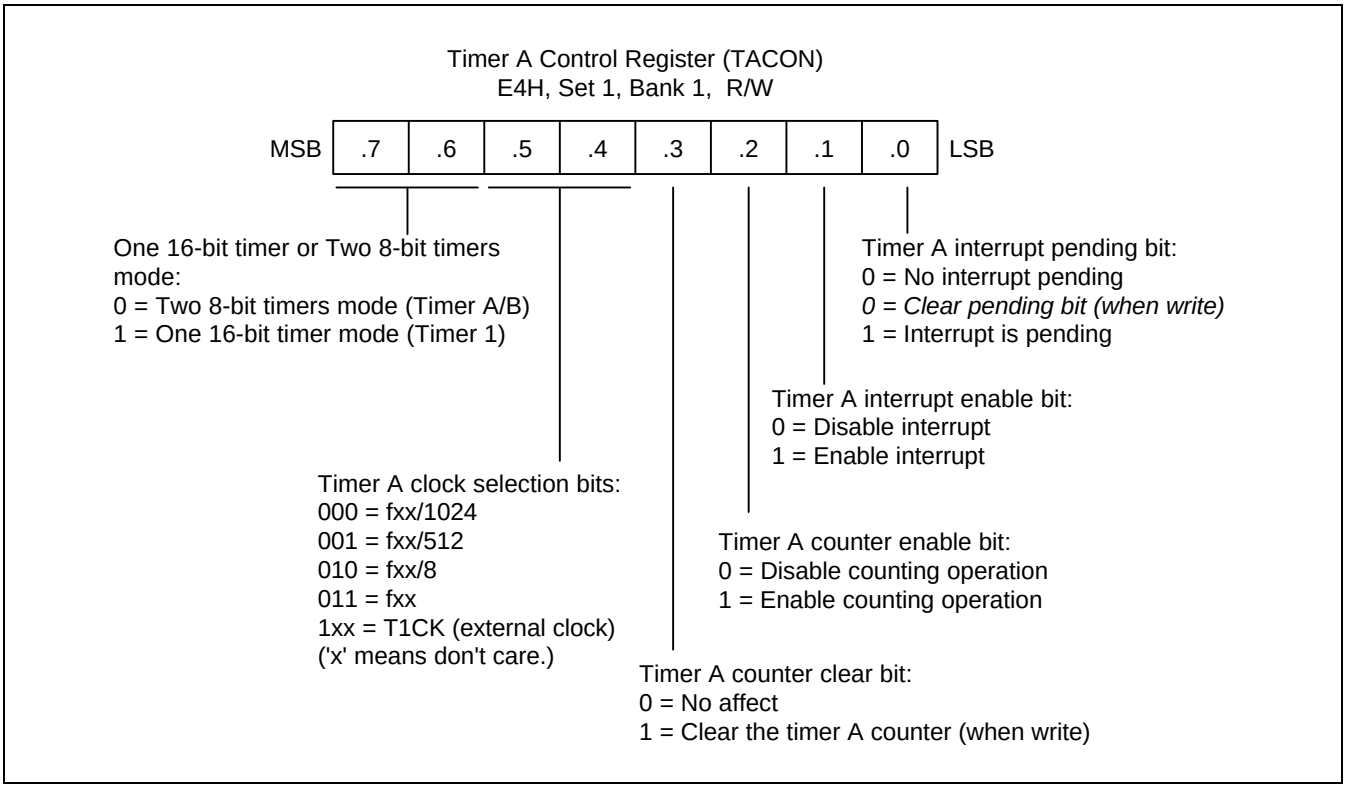

Figure 11-3. Timer A Control Register (TACON)

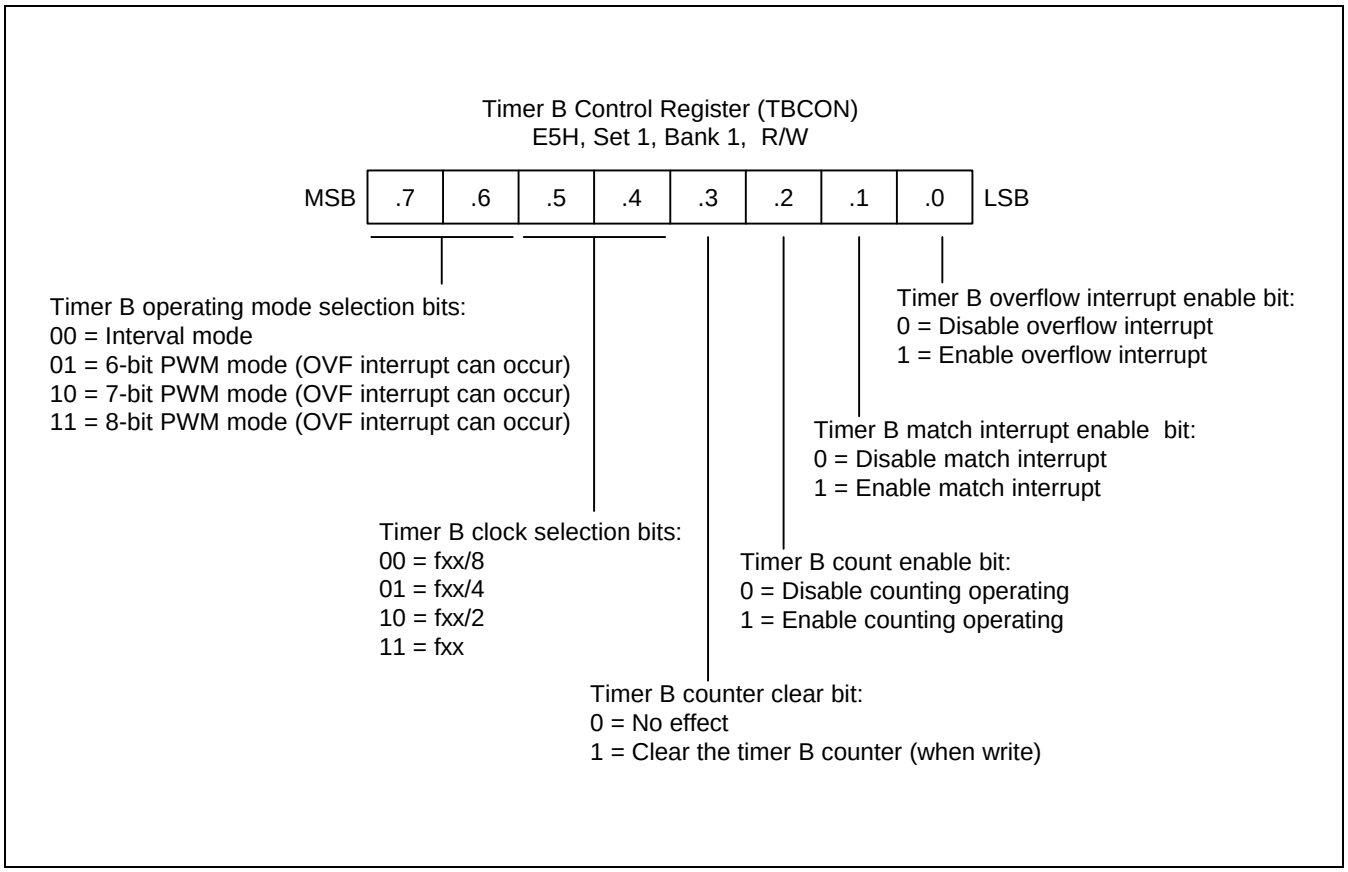

Figure 11-4. Timer B Control Register (TBCON)

FUNCTION DESCRIPTION

Interval Timer Function (Timer A and Timer B)

The timer A and B module can generate an interrupt: the timer A match interrupt (TAINT) and the timer B match interrupt (TBINT). TAINT belongs to interrupt level IRQ1, and is assigned the separate vector address, F4H. TBINT belongs to interrupt level IRQ1 and is assigned the separate vector address, F8H.

The timer A match interrupt pending condition (TACON.0) and the timer B match interrupt pending condition (INTPND.2) must be cleared by software in the application's interrupt service by means of writing a "0" to the TACON.0 and INTPND.2 interrupt pending bit.

Even though TAINT and TBINT are disabled, the application's service routine can detect a pending condition of TAINT and TBINT by the software and execute it's sub-routine. When this case is used, the TAINT and TBINT pending bit must be cleared by the application sub-routine by writing a "0" to the corresponding pending bit TACON.0 and INTPND.2.

In interval timer mode, a match signal is generated when the counter value is identical to the values written to the timer A or timer B reference data registers, TADATA or TBDATA. The match signal generates corresponding match interrupt (TAINT, vector F4H; TBINT, vector F8H) and clears the counter.

If, for example, you write the value 20H to TADATA and 0EH to TACON, the counter will increment until it reaches 20H. At this point, the timer A interrupt request is generated, the counter value is cleared, and counting resumes and you write the value 10H to TBDATA, "0" to TACON.7, and 0EH to TBCON, the counter will increment until it reaches 10H. At this point, TB interrupt request is generated, the counter value is cleared and counting resumes.

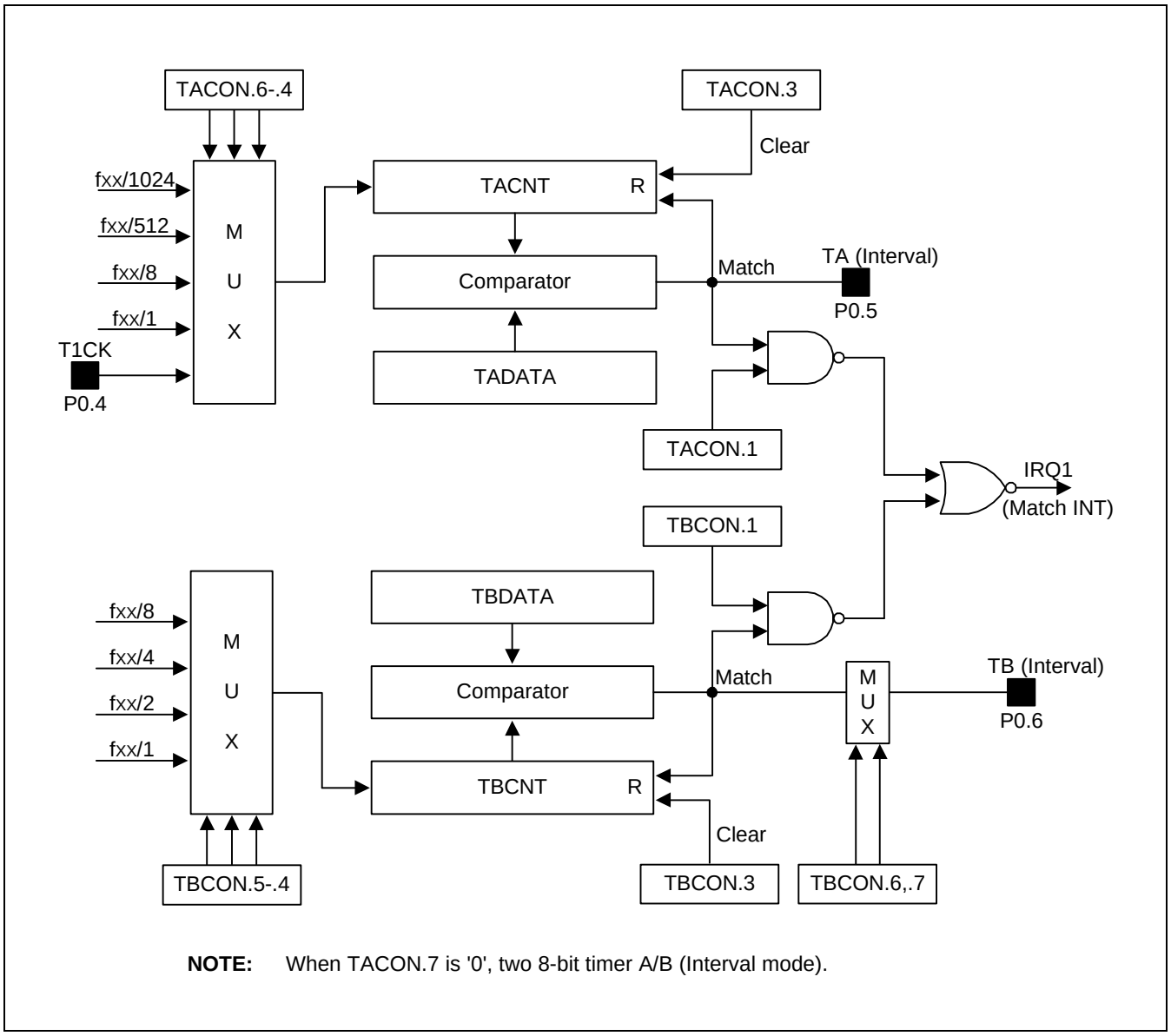

NOTE: When TACON.7 is '0', two 8-bit timer A/B (Interval mode).

Figure 11-5. Timer A and B Function Block Diagram

Pulse Width Modulation Mode (Timer B)

Pulse width modulation (PWM) mode lets you program the width (duration) of the pulse that is output at the TB (P0.6) pin. As in interval timer mode, a match signal is generated when the counter value is identical to the value written to the timer B data register. In PWM mode, however, the match signal does not clear the counter. Instead, it runs continuously, overflowing at "FFH", and then continues incrementing from "00H".

Although you can use the match signal to generate a timer B overflow interrupt, interrupts are not typically used in PWM-type applications. Instead, the pulse at the TB pin is held to Low level as long as the reference data value is less than or equal to (≤) the counter value and then the pulse is held to High level for as long as the data value is greater than (>) the counter value. One pulse width is equal to $t_{CLK} \times 256$ (see Figure 11-6).

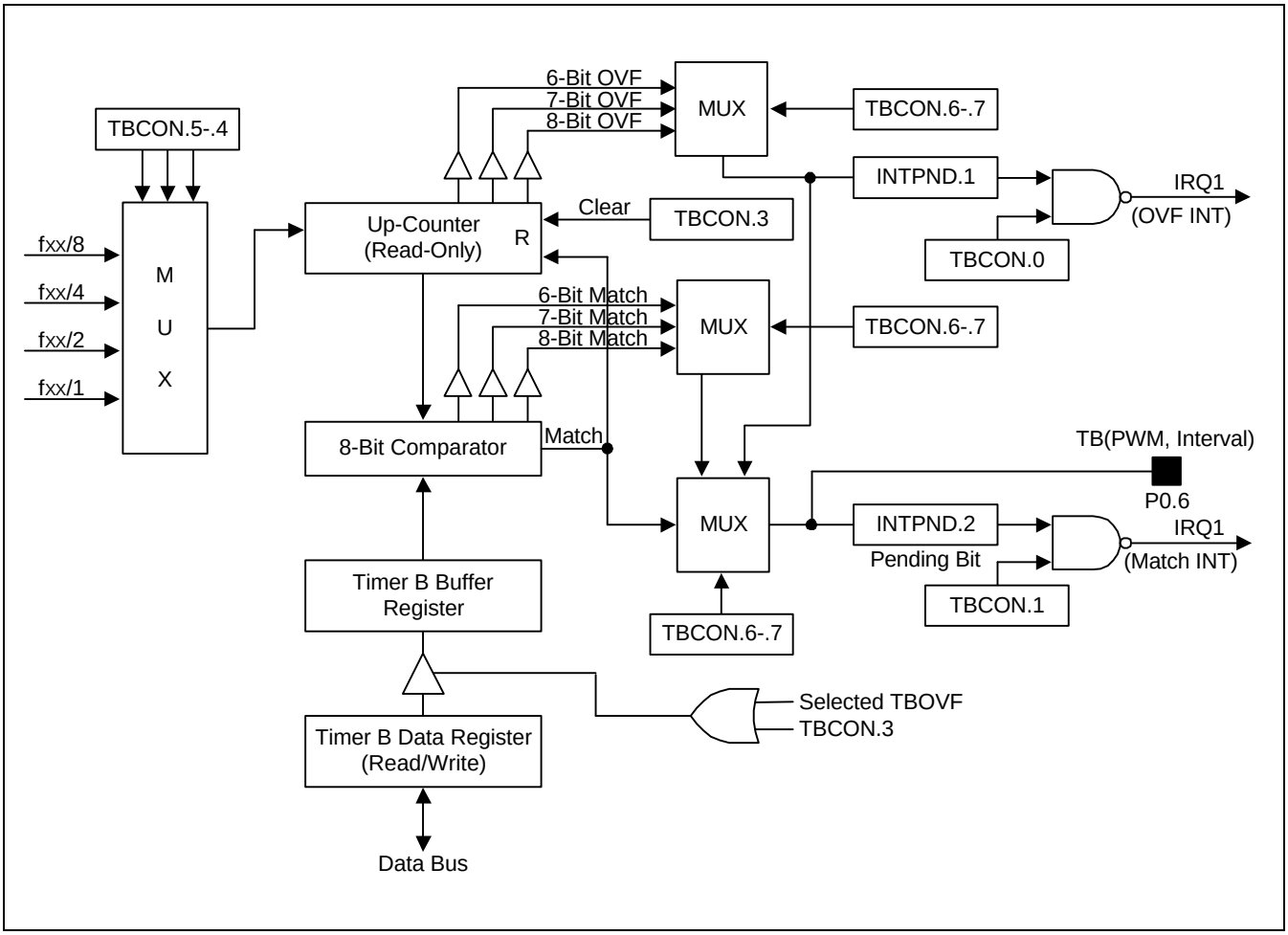

Figure 11-6. Timer B PWM Function Block Diagram

NOTES

12 WATCH TIMER

OVERVIEW

Watch timer functions include real-time and watch-time measurement and interval timing for the system clock. To start watch timer operation, set bit 1 of the watch timer control register, WTCON.1 to "1".
And if you want to service watch timer overflow interrupt (IRQ3, vector F2H), then set the WTCON.6 to “1”.
The watch timer overflow interrupt pending condition (WTCON.0) must be cleared by software in the application’s interrupt service routine by means of writing a "0" to the WTCON.0 interrupt pending bit.
After the watch timer starts and elapses a time, the watch timer interrupt pending bit (WTCON.0) is automatically set to "1", and interrupt requests commence in 3.91ms, 0.25, 0.5 and 1-second intervals by setting Watch timer speed selection bits (WTCON.3 – .2).

The watch timer can generate a steady 2 kHz, 4 kHz, 8 kHz, or 16 kHz signal to BUZ output pin for Buzzer. By setting WTCON.3 and WTCON.2 to "11b", the watch timer will function in high-speed mode, generating an interrupt every 3.91 ms. High-speed mode is useful for timing events for program debugging sequences.

Also, you can select watch timer clock source by setting the WTCON.7 appropriatly value.

Watch timer has the following functional components:

— Real Time and Watch-Time Measurement
— Using a Main System or Subsystem Clock Source (Main clock divided by 2^7(fx/128) or Sub clock(fxt))
— I/O pin for Buzzer Output Frequency Generator (P0.1, BUZ)
— Timing Tests in High-Speed Mode
— Watch timer overflow interrupt (IRQ1, vector F2H) generation
— Watch timer control register, WTCON (set 1, bank 1, E6H, read/write)

WATCH TIMER CONTROL REGISTER (WTCON)

The watch timer control register, WTCON is used to select the input clock source, the watch timer interrupt time and Buzzer signal, to enable or disable the watch timer function. It is located in set 1, bank 1 at address E6H, and is read/write addressable using register addressing mode.
A reset clears WTCON to "00H". This disable the watch timer and select fx/128 as the watch timer clock.
So, if you want to use the watch timer, you must write appropriate value to WTCON.

To values of watch timer speed are accurate when watch timer clock is fxt. So, if you select fx/128 as watch timer clock, the speed will be changed according to the frequency fx.

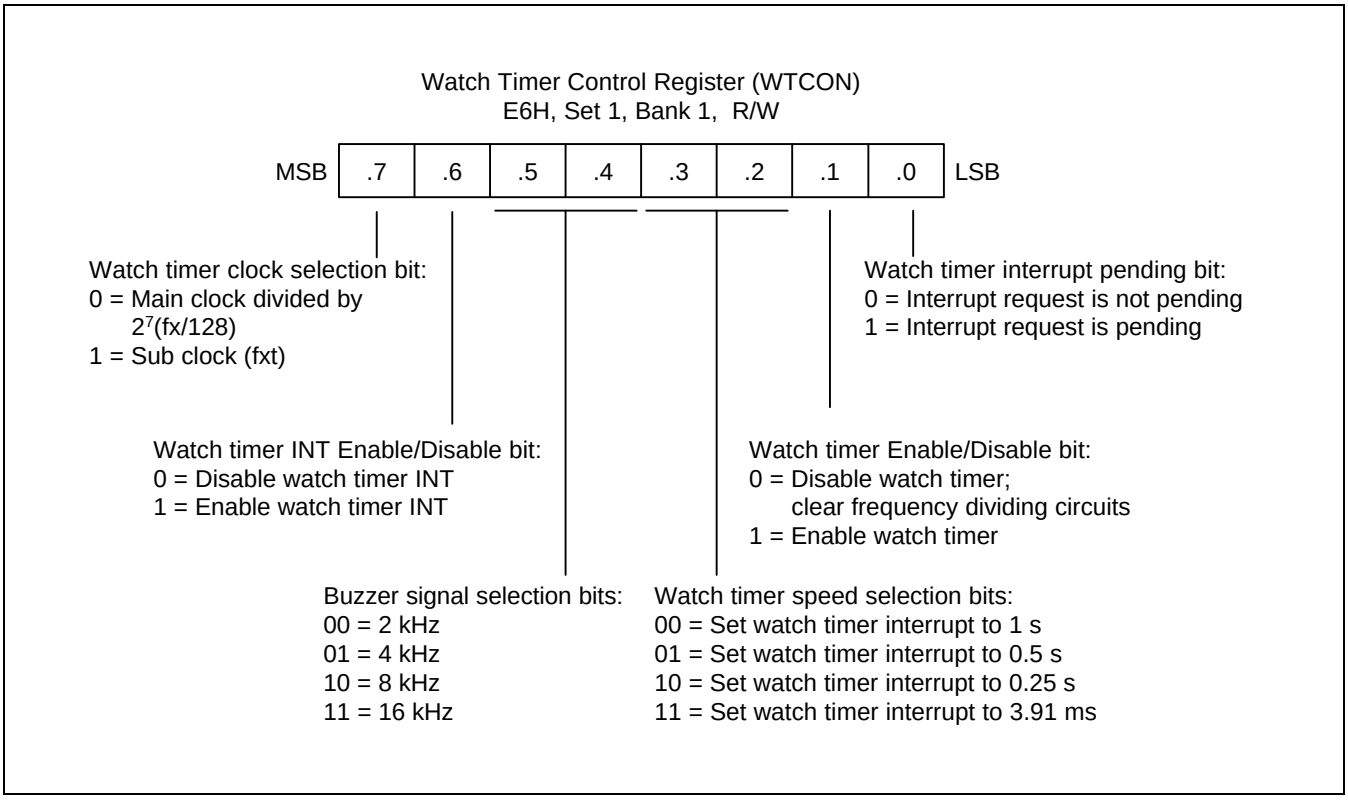

Figure 12-1. Watch Timer Control Register (WTCON)

WATCH TIMER CIRCUIT DIAGRAM

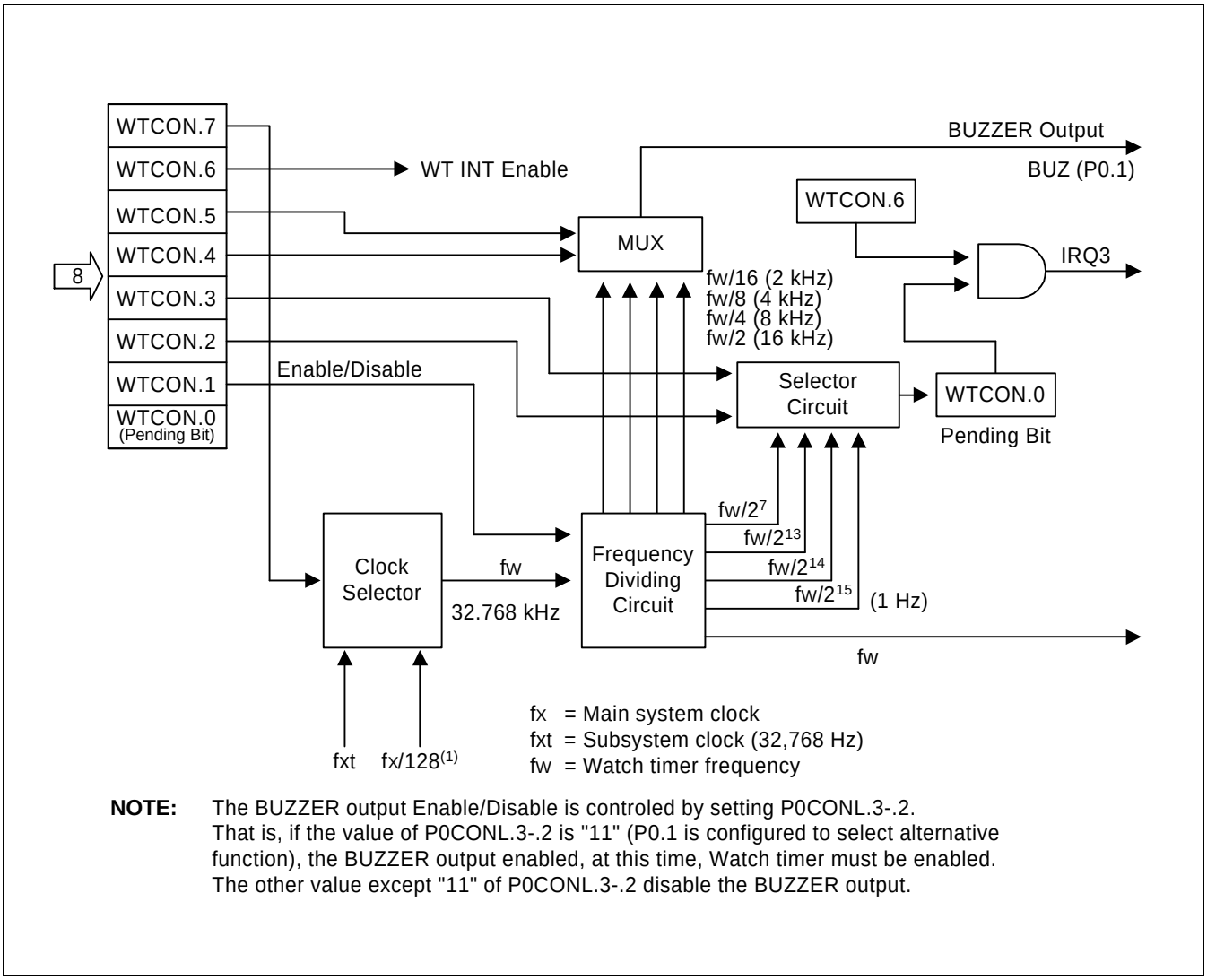

NOTE: The BUZZER output Enable/Disable is controled by setting P0CONL.3-.2. That is, if the value of P0CONL.3-.2 is "11" (P0.1 is configured to select alternative function), the BUZZER output enabled, at this time, Watch timer must be enabled. The other value except "11" of P0CONL.3-.2 disable the BUZZER output.

Figure 12-2. Watch Timer Circuit Diagram

NOTES

13 SERIAL I/O PORT

OVERVIEW

Serial I/O module, SIO can interface with various types of external devices that require serial data transfer. SIO has the following functional components:

— SIO data receive/transmit interrupt (IRQ4, vector F0H) generation
— 8-bit control register, SIOCON (set 1, bank 1, EBH, read/write)
— Clock selection logic
— 8-bit data buffer, SIODATA
— 8-bit prescaler (SIOPS), (set 1, bank 1, ECH, read/write)
— 3-bit serial clock counter
— Serial data I/O pins (P1.4–P1.5, SI, SO)
— External clock input/output pin (P1.6, SCK)

The SIO module can transmit or receive 8-bit serial data at a frequency determined by its corresponding control register settings. To ensure flexible data transmission rates, you can select an internal or external clock source.

PROGRAMMING PROCEDURE

To program the SIO modules, follow these basic steps:

1. Configure P1.4, P1.5 and P1.6 to alternative function (SI, SO, SCK) for interfacing SIO module by setting the P1AFS register to appropriatly value.
2. Load an 8-bit value to the SIOCON control register to properly configure the serial I/O module. In this operation, SIOCON.2 must be set to "1" to enable the data shifter.
3. For interrupt generation, set the serial I/O interrupt enable bit, SIOCON.1 to "1".
4. To transmit data to the serial buffer, write data to SIODATA and set SIOCON.3 to 1, then the shift operation starts.
5. When the shift operation (transmit/receive) is completed, the SIO pending bit (SIOCON.0) is set to "1" and an SIO interrupt request is generated.

SIO CONTROL REGISTER (SIOCON)

The control register for the serial I/O interface module, SIOCON, is located in set 1, bank 1 at address EBH. It has the control settings for SIO module.

— Clock source selection (internal or external) for shift clock
— Interrupt enable
— Edge selection for shift operation
— Clear 3-bit counter and start shift operation
— Shift operation (transmit) enable
— Mode selection (transmit/receive or receive-only)
— Data direction selection (MSB first or LSB first)

A reset clears the SIOCON value to '00H'. This configures the corresponding module with an internal clock source, P.S clock, at the SCK , selects receive-only operating mode, the data shift operation and the interrupt are disabled, and the data direction is selected to MSB-first.
So, if you want to use SIO module, you must write appropriate value to SIOCON.

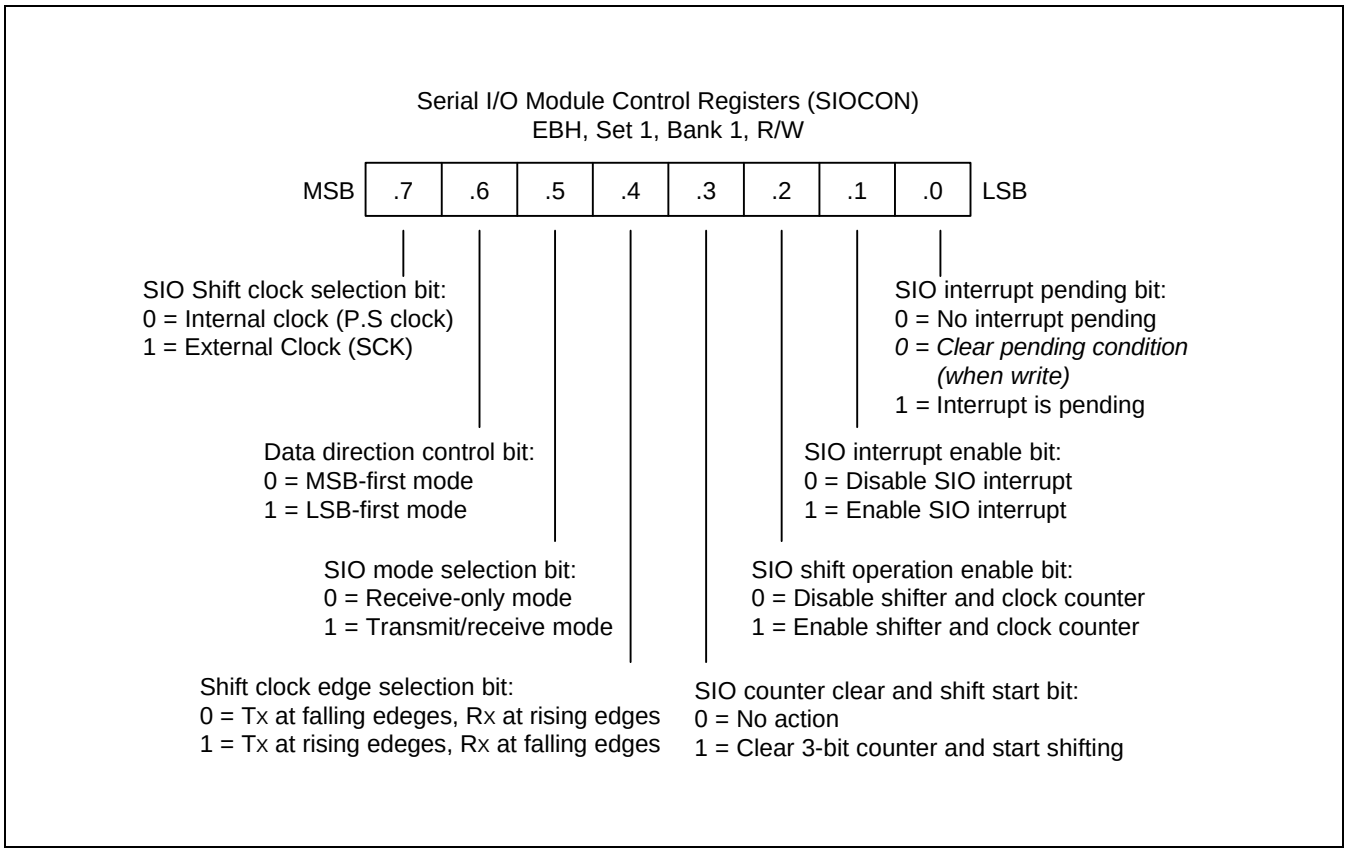

Figure 13-1. Serial I/O Module Control Registers (SIOCON)

SIO PRESCALER REGISTER (SIOPS)

The control register for the serial I/O interface module, SIOPS, is located in set 1, bank 1, at address ECH.

The value stored in the SIO prescaler registers, SIOPS, lets you determine the SIO clock rate (baud rate) as follows:

Baud rate = Input clock (fxx)/[(SIOPS value + 1) × 4] or SCK input clock.

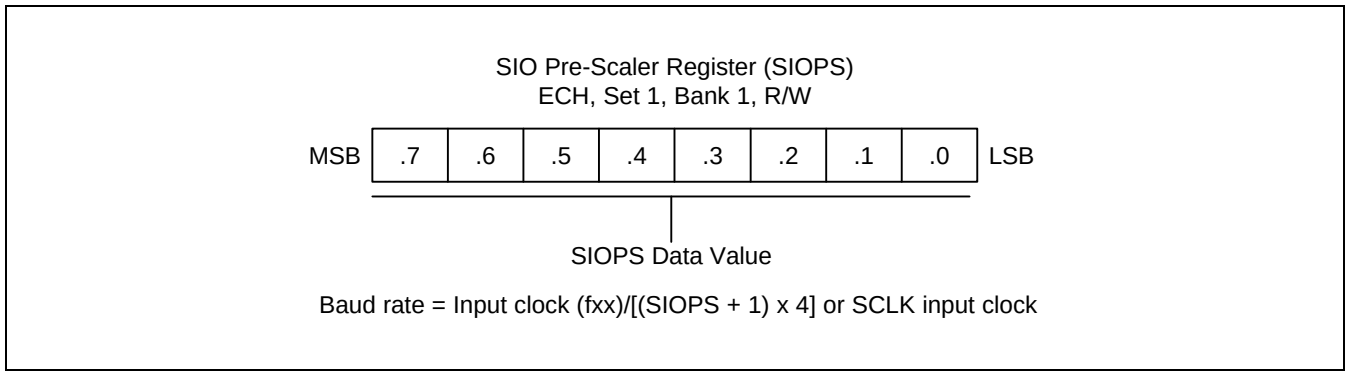

Figure 13-2. SIO Prescaler Register (SIOPS)

BLOCK DIAGRAM

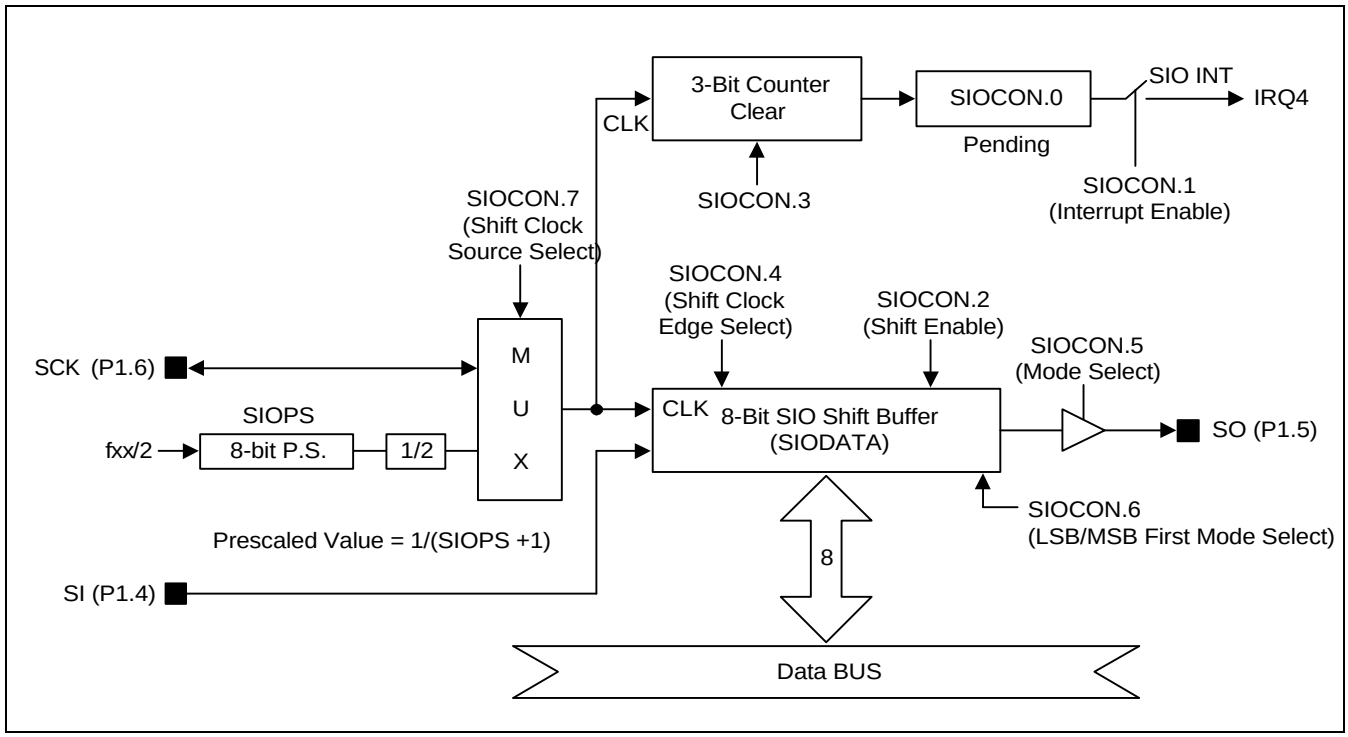

Figure 13-3. SIO Functional Block Diagram

SERIAL I/O TIMING DIAGRAMS

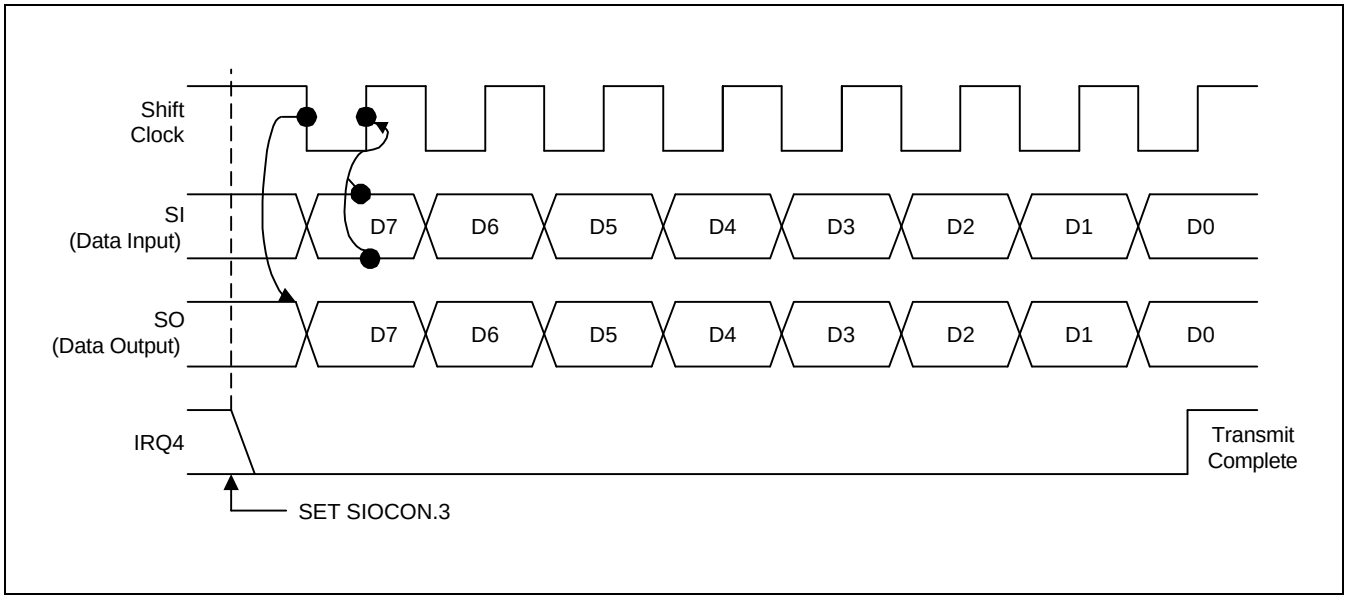

Figure 13-4. SIO Timing in Transmit/Receive Mode (Tx at falling edge, SIOCON.4=0)

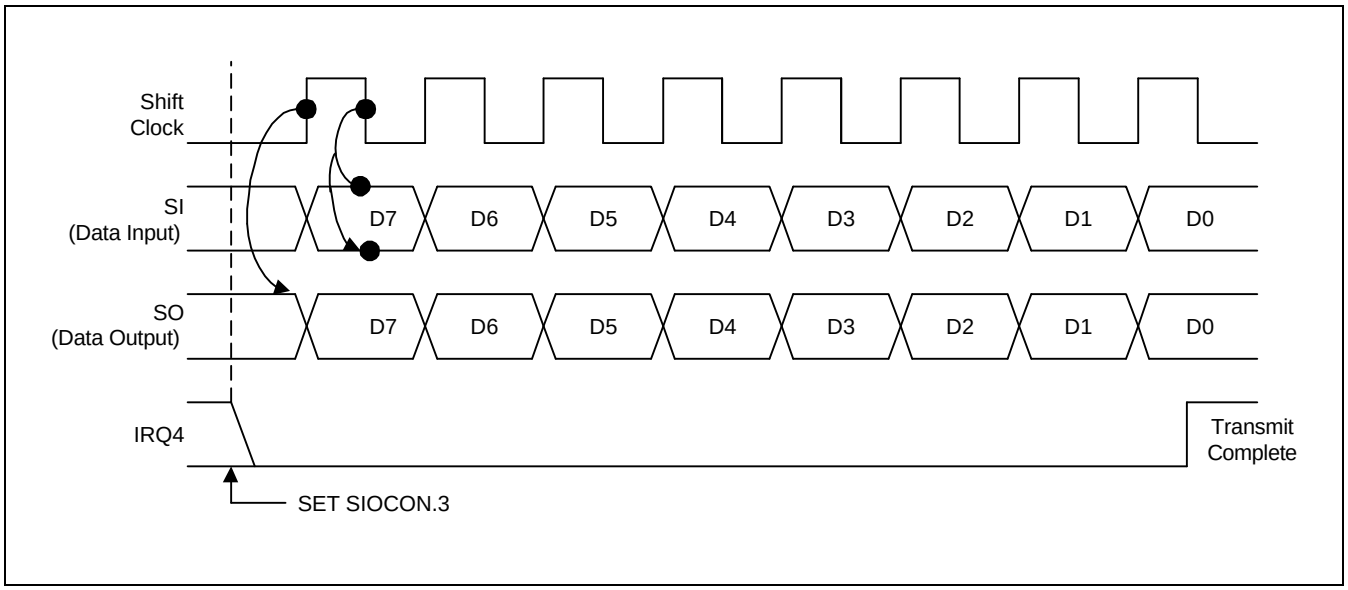

Figure 13-5. SIO Timing in Transmit/Receive Mode (Tx at rising edge, SIOCON.4=1)

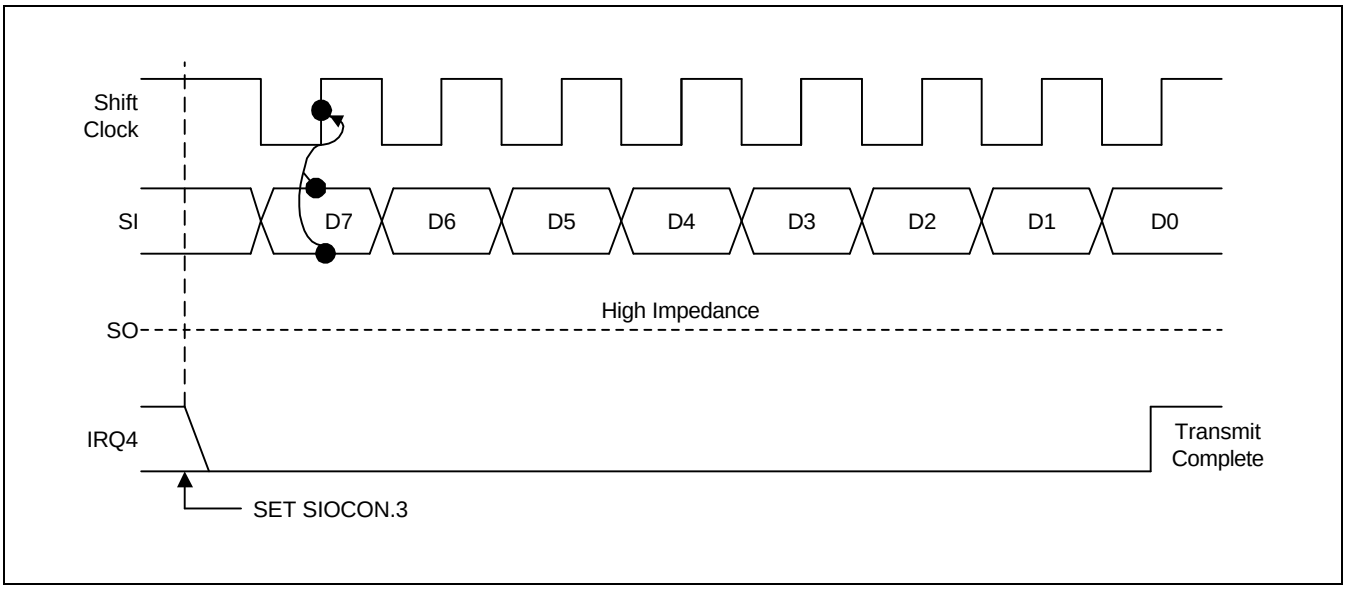

Figure 13-6. SIO Timing in Receive-Only Mode (Rising edge start)

☞ **PROGRAMMING TIP — Use Internal Clock to Transfer And Receive Serial Data**

1. The method that uses hardware pending check is used.

```
            •
            •
            •
            DI                          ;  Disable All interrupts
            LD      P1AFS, #70H         ;  P1.4–P1.6 are selected to alternative function for
                                        ;     SI, SO, SCK, respectively
            EI

            SB1
            LD      SIODATA,TDATA       ;  Load data to SIO buffer
            LD      SIOPS,#90H          ;  Baud rate = input clock(fxx)/[(144 + 1) x 4]
            LD      SIOCON,#2EH         ;  Interval clock, MSB first, transmit/receive mode
            SB0                         ;  Select falling edges to start shift operation
                                        ;  Clear 3-bit counter and start shifting
                                        ;  Enable shifter and clock counter
                                        ;  Enable SIO interrupt and clear pending
            •
            •
            •
SIOINT      PUSH    RP0                 ;
            SRP0    #RDATA              ;
            SB1
            LD      R0,SIODATA          ;  Load received data to general register
            OR      SIOCON,#08H         ;  SIO restart
            POP     RP0
            IRET
```

☞ PROGRAMMING TIP — Use Internal Clock to Transfer And Receive Serial Data (Continued)

2. The method that uses software pending check is used.

```
            •
            •
            •
            DI                          ;  Disable All interrupts
            LD      P1AFS, #70H         ;  P1.4–P1.6 are selected to alternative function for
                                        ;  SI, SO, SCK , respectively
            EI
            SB1
            LD      SIODATA,TDATA       ;  Load data to SIO buffer
            LD      SIOPS,#90H          ;  Baud rate = input clock(fxx)/[(144 + 1) × 4]
            LD      SIOCON,#2CH         ;  Internal clock, MSB first, transmit/receive mode
                                        ;  Select falling edges to start shift operation
                                        ;  clear 3-bit counter and start shifting
                                        ;  Disable SIO interrup
SIOtest:    LD      R6,SIOCON           ;  To check whether transmit and receive is finished
            BTJRF   SIOtest,R6.0        ;  Check pending bit
            NOP
            AND     SIOCON,#0FEH        ;  Pending clear by software
            LD      RDATA,SIODATA       ;  Load received data to RDATA
            •
            •
            •
            SB0
            •
            •
            •
```

14 CALLER ID BLOCK

OVERVIEW

The S3C852B/P852B microcontroller has a Caller ID on Call Waiting (CIDCW) receiver, tone generator, etc. The S3C852B is used for receiving physical layer signals like Bellcore's CPE Alerting Signal (CAS) and similar evolving systems and also meets the requirements of emerging Caller ID on Call Waiting (CIDCW) services. In addition, two different signal inputs are available to support Tip/Ring and Hybrid connectivity. The device also includes a 1200 baud Bell 202/V.23 compatible FSK data demodulator, a ring or line reversal detector, a line voltage measurement unit, a TIA/EIA PN-4159 compatible Stutter Dial Tone detector, and a tone generator is capable of generating FSK signal and dual tone signals such as CAS, DTMF to support various applications such as short messaging service (SMS).

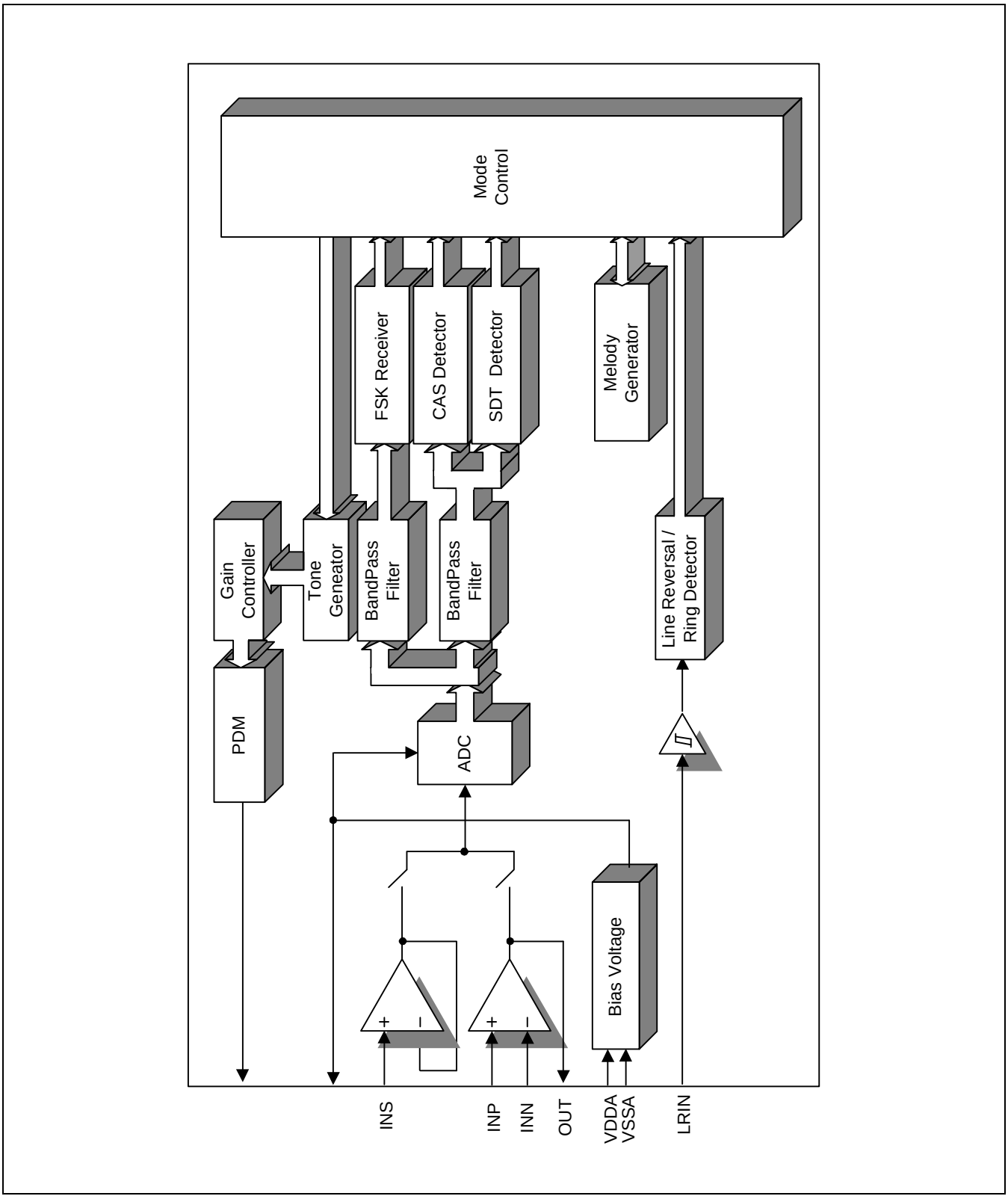

Figure 14-1. CID Part Functional Block Diagram

FUNCTION DESCRIPTION OF CID BLOCK

ANALOG INPUT AND PREPROCESSOR

The preprocessor for the FSK receiver ,the CAS and the SDT detectors, comprises two input signal buffers, an 14-bit Analog-to-Digital Converter (14-bit ADC) and digital bandpass filters. Bandpass filters are used to attenuate out band noise and interfering signals, which might otherwise reach the FSK receiver and CAS, SDT detectors. The CAS and SDT detectors share a single digital filter while the FSK receiver has its own separate filter.

In CID Block's power down mode, the CID block can be forced into a power-down state by switching off the 3.579545 MHz main clock and ADC's and op-amps.

Differential Input Buffer

The differential input buffer is used to convert the balanced telephone line signal to the input signal of 14-bit ADC in the S3C852B.

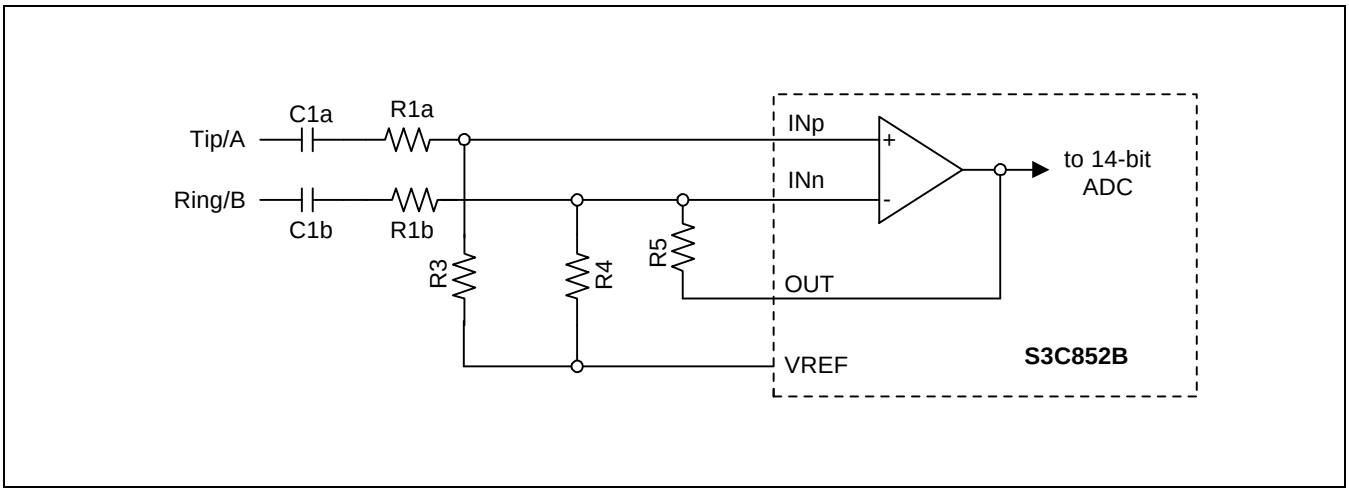

Figure 14-2. Differential Input Buffer of the S3C852B

Design equations for this buffer are;

The differential voltage gain = R5/R1b.

R1a = R1b

C1a = C1b

R3 = R4 * R5/(R4 + R5)

The target differential voltage gain should be adjusted to obtain the expected signal level at the "OUT" pin.

Single Ended Input Buffer

The single ended input buffer may also be used with the telephone line signal connected to the hybrid as shown in Figure 14-3.

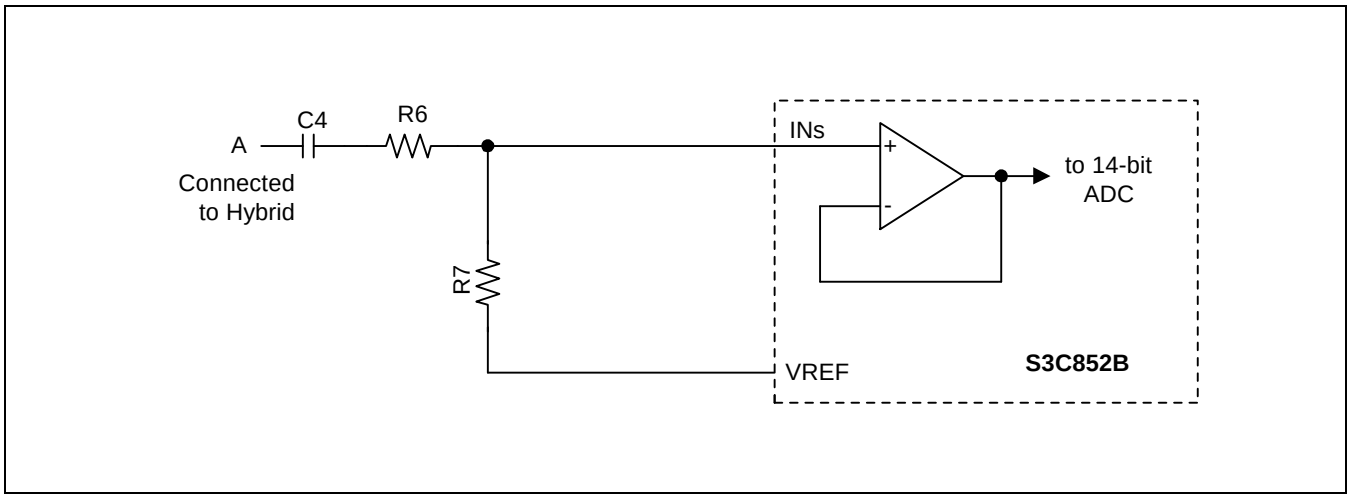

Figure 14-3. Single Ended Buffer of the S3C852B

The voltage gain is R7/(R6 + R7)

The target voltage gain should be adjusted to obtain the expected signal level at the INS input.

The BFS (Buffer selection) bit in the Function register chooses between the output of the single-ended input buffer and the output of the differential input buffer, sending the selected output to the 14-bit ADC. The differential input buffer is selected when BFS is "0" and the single ended input buffer is selected when BFS is "1". The default value of BFS is "0"

CAS TONE DETECTION

The S3C852B CAS detection algorithm is capable of detecting the CAS signals during speech with high talk-down and talk-off performance, and 100% Bellcore compliant performance with use of a hybrid.

If the CAS detection is enabled the CID block will generate an interrupt (Interrupt register, bit 1 is set) when a correct dual tone (2130 and 2750 Hz) is detected.

CAS detection is enabled when the CASenable bit in the Function register is set and the FSK and SDT enable bits in the Function register are cleared.

The parameters of the CAS Detector are shown in Table 14-1.

Table 14-1. CAS detector parameters

Parameter	***Value***
Low tone frequency	2130Hz ± 0.5%
High tone frequency	2750Hz ± 0.5%
Accepted signal level	-5.2dBm to –38dBm
Twist	-6dB to +6dB

When a valid CAS signal is detected, the CASdetect status bit of the Status register and the CASint bit of the interrupt register are set and an interrupt is generated. When the signal level is below the accepted signal level the status bit of the status register is cleared and the CASint interrupt bit is set , generating another interrupt.

The CASint interrupt bit is reset when the interrupt register is read (see Figure 14-4).

In order to accurately detect the end of a CAS tone, it is recommended to mute the near end speech immediately after the CAS tone has been detected.

To disable the CAS detection function, set the CASenable bit to 0 when the CASdetect bit is 0, or after the second CAS interrupt.

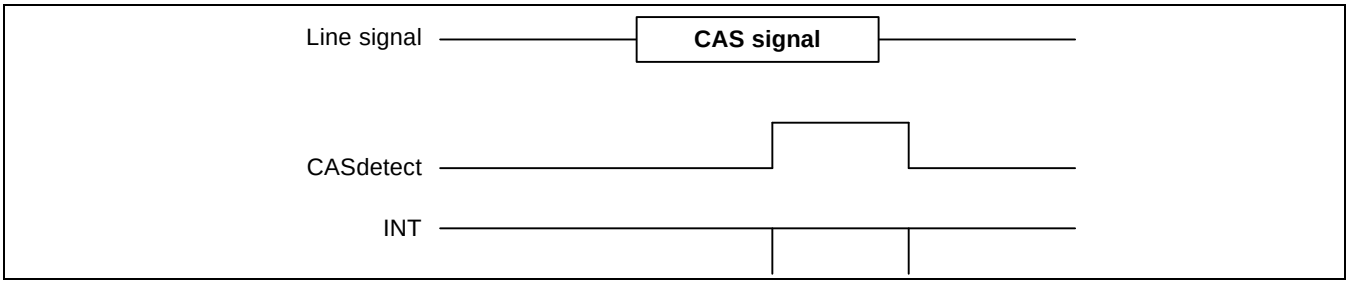

Figure 14-4. CASdetect, CASint and INT Related to the CAS Tone

FSK DATA RECEPTION

FSK Data Reception Sequence

The on-chip FSK receiver satisfies all target specifications of Bellcore. The FSK receiver function can be enabled by setting the FSKenable bit (Function register, bit2) and clearing the CASenable (Function register, bit1) and the SDTenable (Function register, bit5) bits.

When the FSK receiver is enabled, the CID BLOCK continuously checks for a signal in the FSK band (~1200 - ~2200 Hz) above the minimum signal level threshold. An FSK data word consists of one start bit (space) followed by eight data bits and one stop bit (mark). After the FSK receiver has detected a start bit it starts receiving the data bits (LSB first). After the 8th data bit the FSKint interrupt bit (Interrupt register, bit2) is set and an interrupt is generated.

The FSKint interrupt bit is cleared when the Interrupt register is read. The interrupt register and the FSKDT register should be read every time an interrupt occurs.

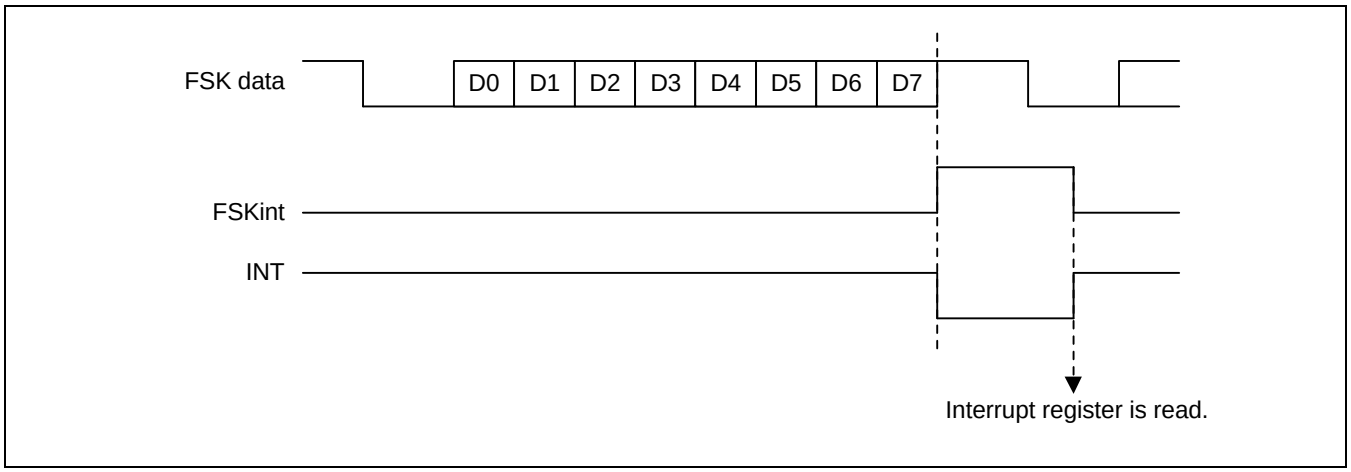

Figure 14-5. Sequence to Receive an FSK Data Byte

The parameters of the FSK receiver are shown in Table 14-2.

Table 14-2. FSK Receiver Parameters

Parameter	Bellcore	CCITT/ V23
Mark frequency (logic 1)	1200Hz ± 1%	1300Hz ± 1.5%
Space frequency (logic 0)	2200Hz ± 1%	2100Hz ± 1.5%
Maximum allowed signal level	0dBm	-8dBV
Minimum signal level threshold	<-45dBm	<-52dBV
Twist	-10dB to +10dB	-6dB to +6dB
Accepted S/N (0Hz – 200Hz)	<-20dB	<-20dB
Accepted S/N (200Hz – 3200Hz)	<6dB	<6dB
Accepted S/N (3200Hz – 15000Hz)	<-20dB	<-20dB
Transmission rate	1200 bits per second 1%	1200 bits per second 1%

Begin Of Mark (BOM) Detection

BOMDC bit of MODE register (MODE register, bit 6) is utilized for detecting begin of mark or channel seizure. If BOMDC is cleared, the BOMdetect signal (STAT register, bit 4) will be set after the begin of mark has been detected, and if BOMDC is '1', BOMdetect will be set after the channel seizure detected. When BOMDC is '1' and BOMdetect is set, the interrupts occur due to channel seizure as shown in Figure 14-6. If BOMDC is '0', interrupt will therefore not be generated during the channel seizure and during the block of marks as shown in Figure 9. The FSK interrupts of data bytes will be generated after a mark period of at least 16 sequential 1's has been detected. Behavior of BOMdetect (STAT register, bit 4) is shown in Figure 14-7. This bit will be cleared when the FSK receiver is disabled or a signal drop out occurs for more than 18.3ms. In the latter case the FSK receiver will behave as if it has just been disabled.

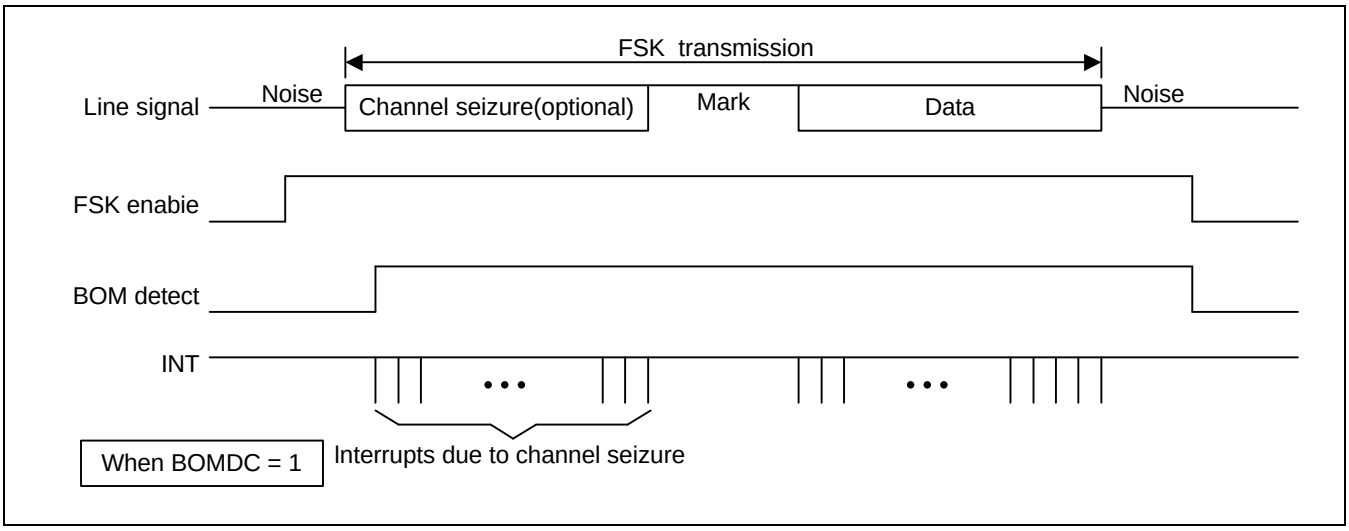

Figure 14-6. Interrupt behavior of the FSK receiver with BOMDC = 1

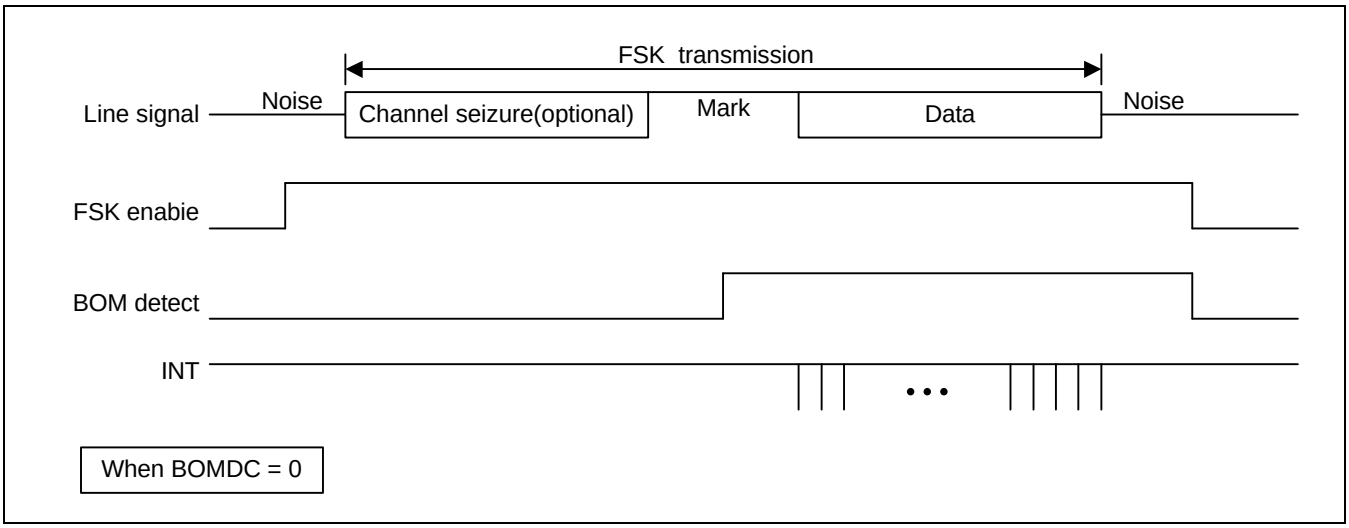

Figure 14-7. Interrupt behavior of the FSK receiver with BOMDC = 0

STUTTER DIAL TONE(SDT) DETECTOR

This block is enabled when the S3C852B is set to SDT enable mode (Function register, bit5) and all the other functions in the Function register are disabled.

The detector measures the total signal level for every 31.5ms. When the total signal level is above -36dBm and the frequencies of dual tone are 350Hz and 440Hz dial tone band, the SDTdetect bit in the Status register is set. When the total signal level is below –38dBm the SDTdetect bit is cleared (see Table 14-3). Each time SDTdetect changes the SDTint bit is set and an interrupt is generated. The SDTint bit is cleared when the Interrupt register is read. This behavior is shown in Figure 14-8.

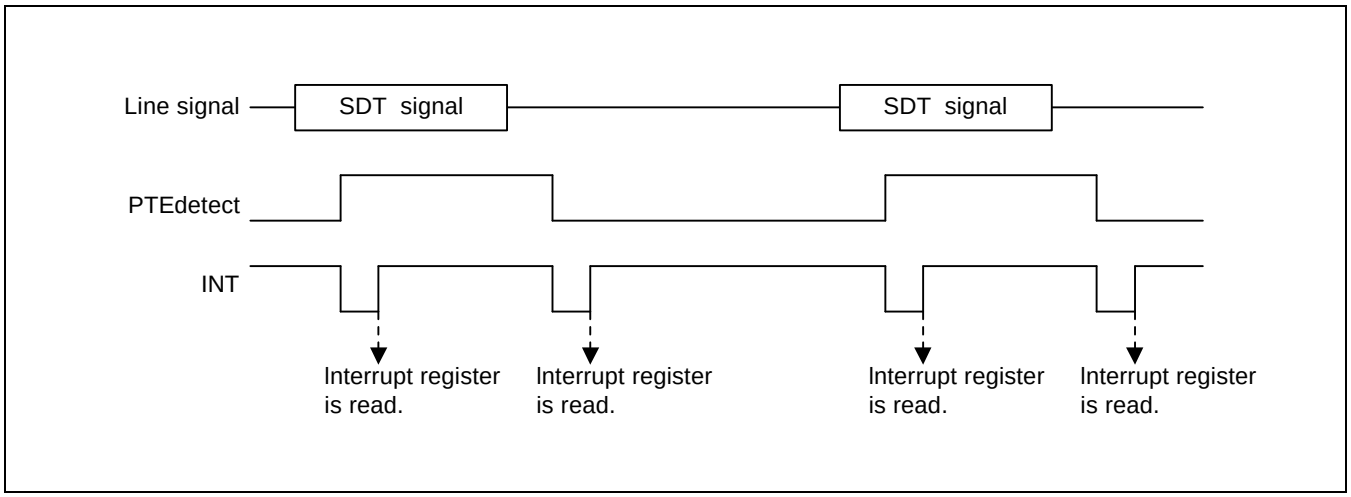

Figure 14-8. SDT Detector Operation

Table 14-3. Stutter dial Tone Parameters

Parameters	Values
Frequencies	350Hz + 440Hz dual tone
Signal amplitude power	-1dBm to -48dBm
Duration	80 to 160ms on/off, with a duty cycle from 40% to 60%

RING OR LINE REVERSAL DETECTOR

For ring or line reversal detection, some external components are needed to generate a pulse each time a ring or line reversal occurs, as shown in Figure 14-9. Interrupt generation of the ring or line reversal detector is controlled by the LRenable bit in the Function register. When LRenable is set to "1", the LRint bit of the interrupt register will be set and interrupts will be generated at every transition of the LRstatus bit. When LRenable is "0", interrupts will not generated.

The LRstatus bit (reset value is high) in the Status register is cleared to "0" at any positive edge of the LRin. If no positive edges of LRin are detected in Tguard time the LRstatus bit is set to "1". The LRint bit is cleared when the Interrupt register is read.

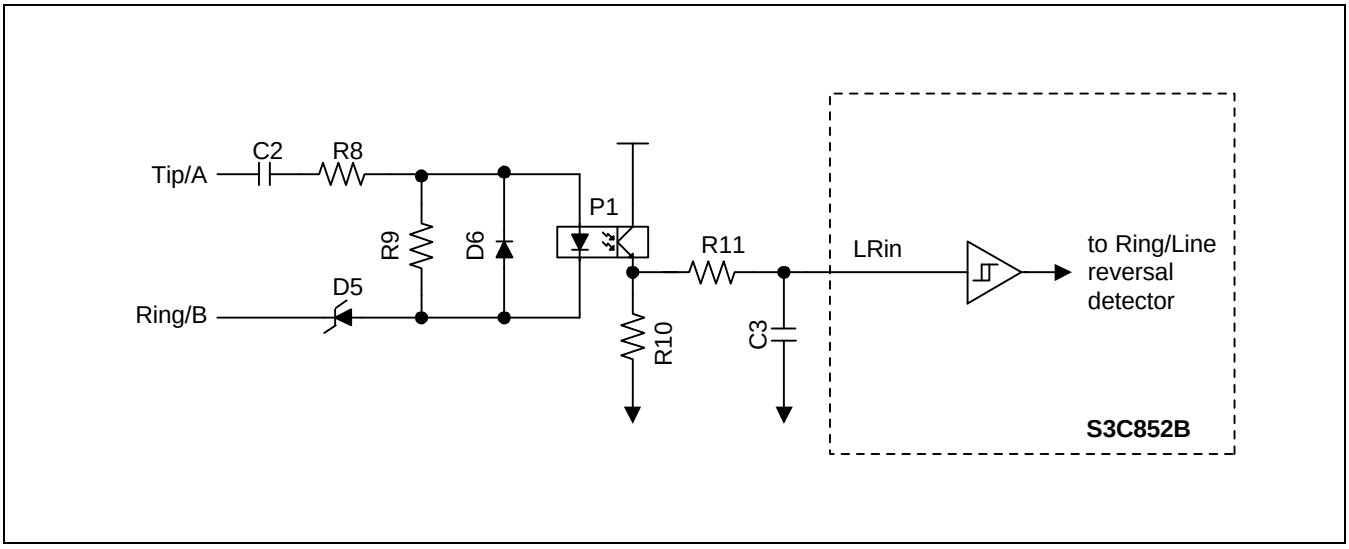

Figure 14-9. External Component to Generate LRin

If an LRint interrupt has been generated in power-down mode, it is recommended to disable power-down mode to be able to count the guard time counter using the sub clock (XTIN). The guard time counter is reset when LRin is high. The guard time (Tguard) can be programmed by writing the GTIME register as follows.

Tguard = 183us * (GTIME[6:0] * 4 + 3)

(Ex. Tguard = 44.469ms = 0.153ms * (0111100B * 4 + 3))

Figure 14-10 and Figure 14-11 show line reversal and ring detection respectively.

The LRin of Figure 14-11 shows the behavior of LRin signal when the reference circuit of Figure 14-9 is used.

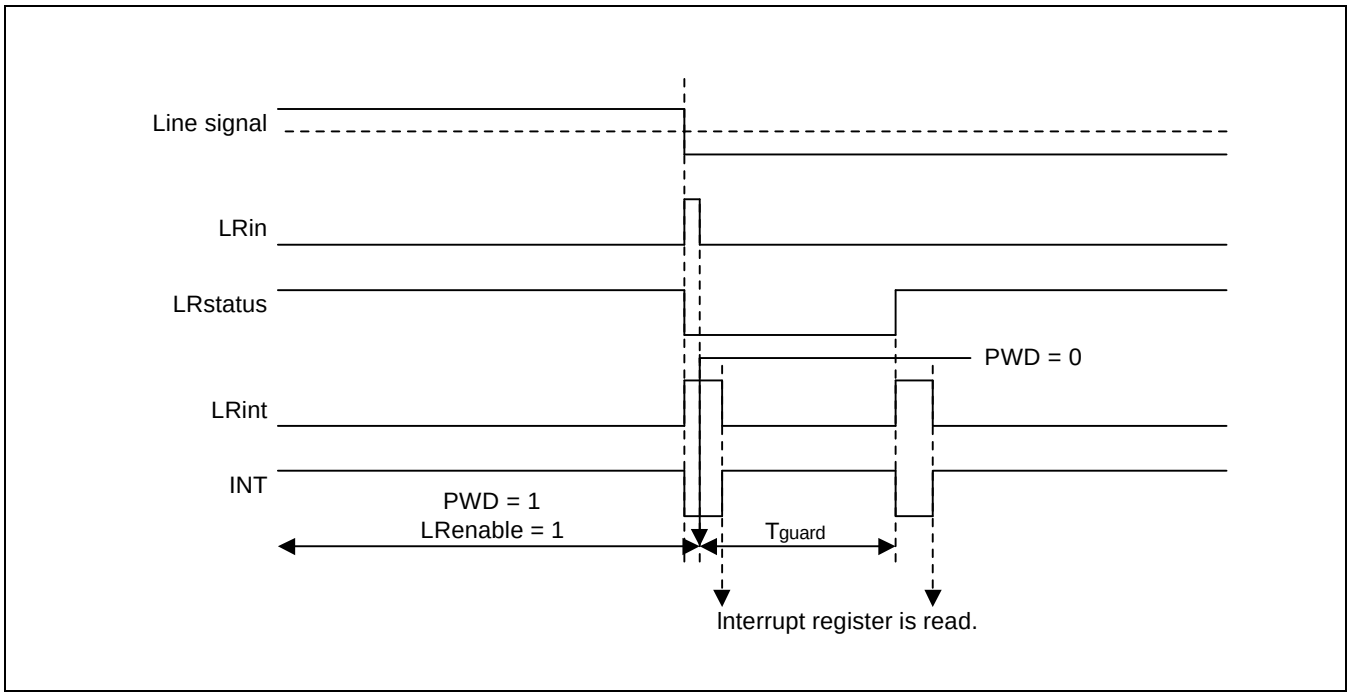

Figure 14-10. Behavior of Signals on a Line Reversal

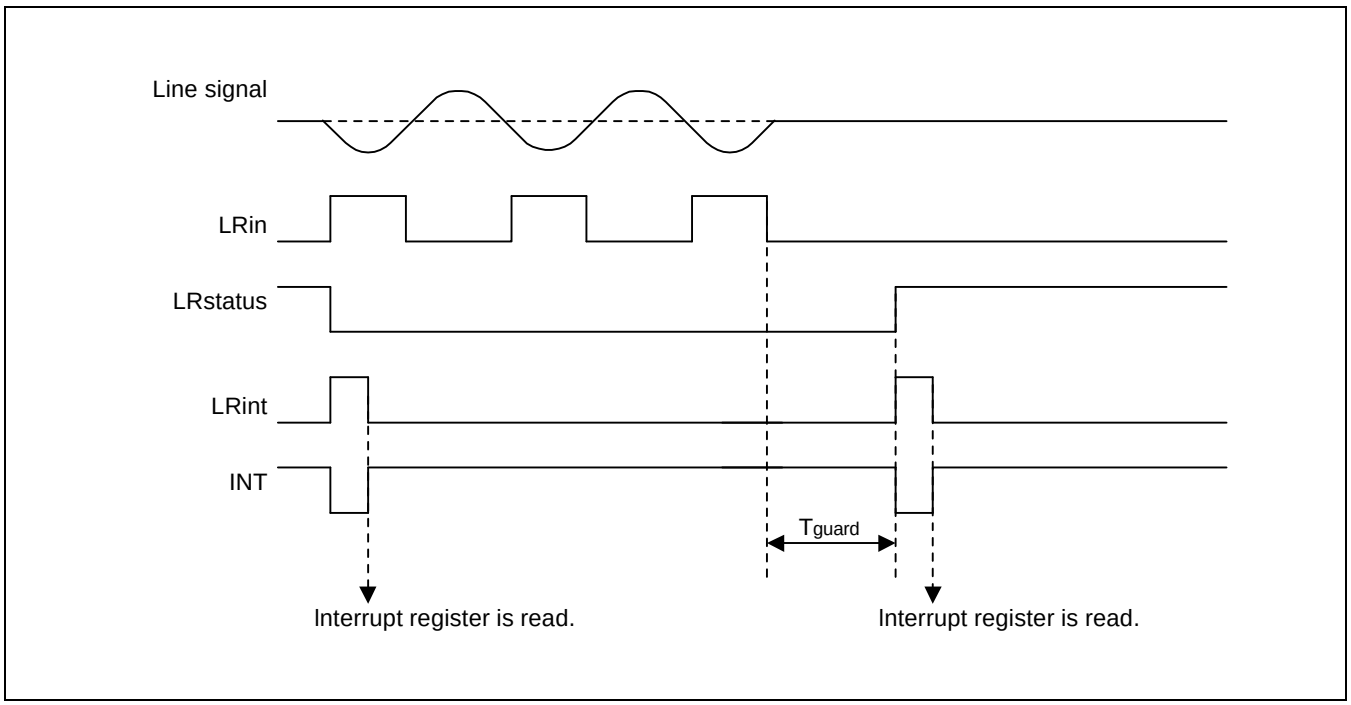

Figure 14-11. Behavior of Signals During Ring

TONE GENERATOR

S3C852B has a tone generator capable of generating general single tone such as FSK and general dual tone such as CAS or DTMF. The block diagram of tone generator is shown in Figure 14-12. The tone generator contains a numerically controlled oscillator (NCO) to generate the addresses of two sine lookup tables (LUT) for producing dual tone. The input tone of NCO is selected by TONES register value. The output power of each low and high tone can be controlled through two gain controllers (multipliers), and the added value of dual tone is converted to analog sine wave through pulse density modulator (PDM) and external RC circuit. To enable the tone generator, TONEenable bit of function register (FUNC register, bit 3) must be set to '1' for the first. If TONEenable bit is '0', no tone will be generated. TONEenable bit must be set before writing the control and data registers related to tone generation. To generate dual tone, dual tone ON-OFF (DTONonoff) bit (TONES register bit 1) must be set to '1' and FSK ON-OFF (FSKonoff) bit (TONES register bit 0) bit to '0'. For FSK generation, set FSKonoff bit to '1' and clear DTONonoff bit to '0'.

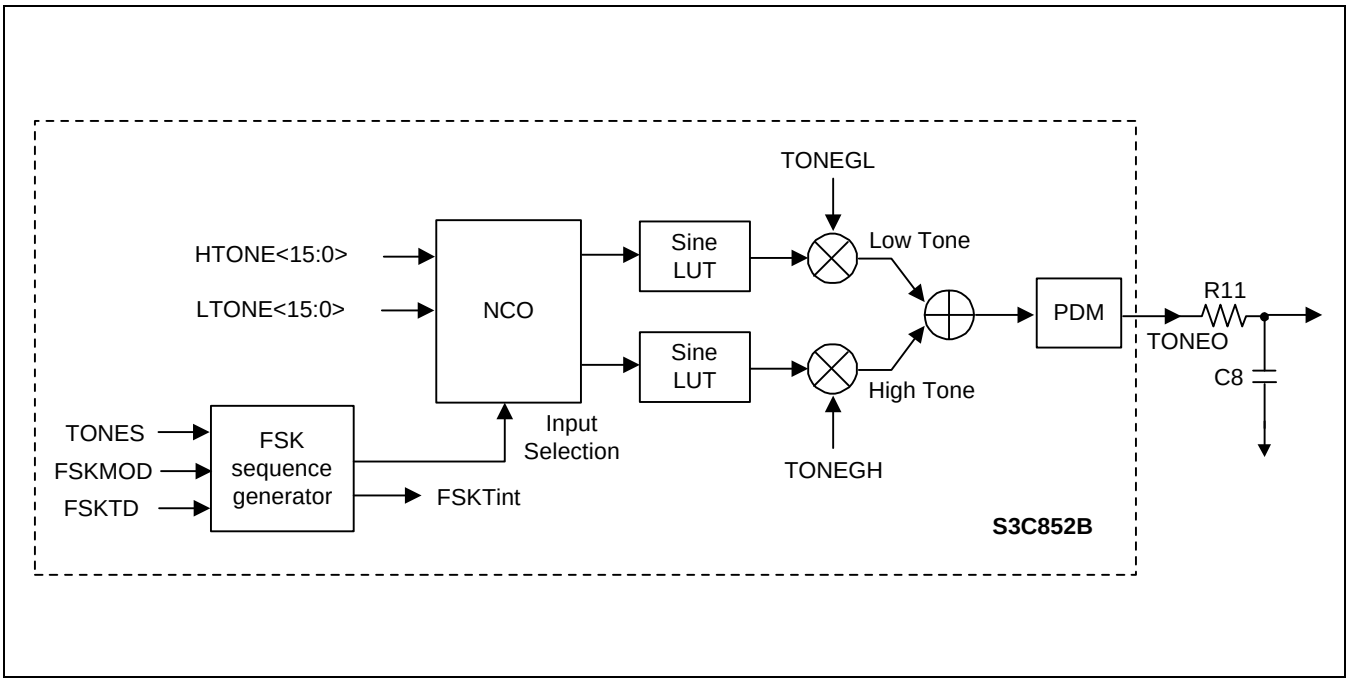

Figure 14-12. Tone Generator Block

Numerically Controlled Oscillator

S3C852B contains two sets of NCO for generating dual tone, which receives 16-bit phase data (Dfreq) written by the MCU and continuously add and accumulate it using 24-bit phase accumulator at every clock cycle. The 5 most significant bits of accumulator is utilized as the address (n) of sine LUT, which contains 32 amplitude values of sine(2πn/32). The resolution (minimum frequency) and output frequency (f_{OUT}) of the NCO is described below, when f_{CLK} is frequency of input clock (f_{CLK} = 1.789973 MHz = 3.579545/2 MHz).

Resolution = $f_{CLK}/2^{24}$ = 0.107Hz

f_{OUT} = Dfreq* $f_{CLK}/2^{24}$

So the phase input (Dfreq) is determined as follows

Dfreq = $f_{OUT}*2^{24}/f_{CLK}$

The block diagram of NCO is shown in Figure 14-13.

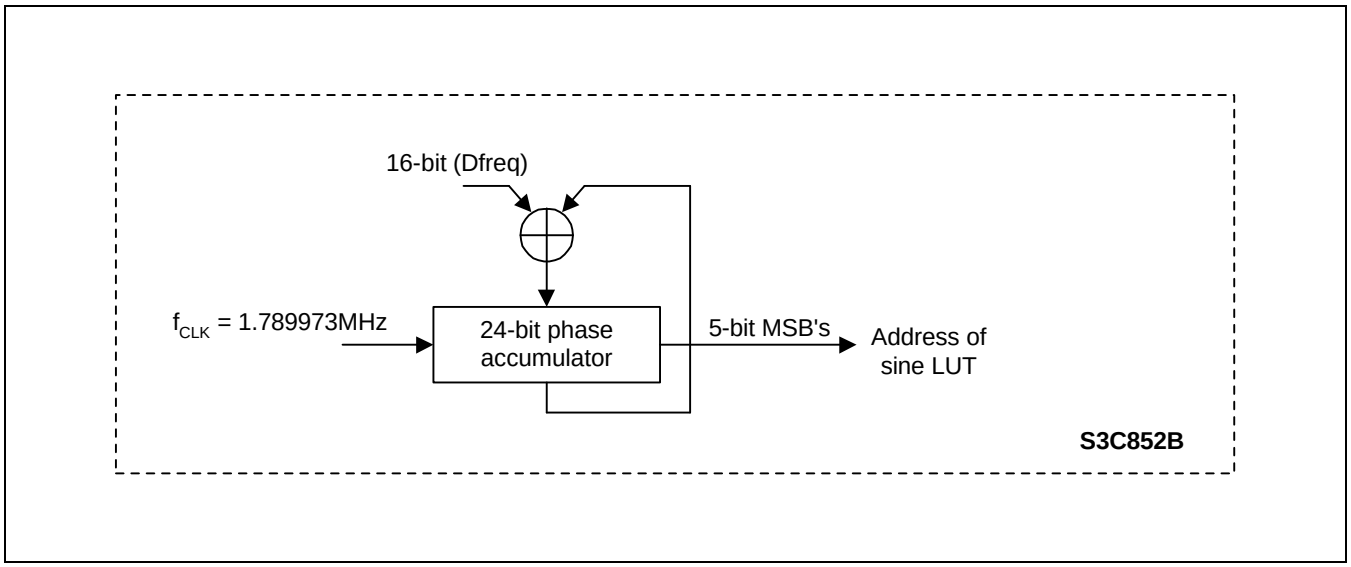

Figure 14-13. Block Diagram of NCO

For example, 16-bit data of LTONE1<7:0> and LTONE0<15:0> for low frequency of DTMF character "1" (= 697Hz) are determined as follows;

f_{OUT} = 697Hz

f_{CLK} = 1789973Hz

Dfreq = $f_{OUT}*2^{24}/f_{CLK}$ = 6534 = 1986h

LTONE1<7:0> = 19h
LTONE0<7:0> = 86h

Dual Tone Generation Function

The tone generator can be utilized as CAS, DTMF or other dual or other single sine wave generator. To enable the function of generating general dual tone, TONEenable bit (FUNC.3) must be set to '1', and the dual tone will be generated by setting dual tone ON-OFF bit (DTONonoff) in tone select register (TONES, bit 1) to '1' and FSK ON-OFF (FSKonoff) bit (TONES register, bit 0) of TONES to '0'. If DTONonoff bit is programmed to '0', dual tone generation function will be off. The 16-bit phase input data of high tone must be written in high tone data registers, which are HTONE1 (MSB) and HTONE0 (LSB), the data of low tone in low tone data registers, which are LTONE1 (MSB) and LTONE0 (LSB).

The Tone gain registers (TONEGH for high tone and TONEGL for low tone) can control the output gain of high and low tone. The default power of each tone is –4.3dBm with +/-5% deviation when V_{DD} is 3.3V on DTMF generation. The TONEGH & TONEL registers contain the gain factors those are multiplied to the default signal power to obtain the dual tone signal power. The gain factor is an unsigned number. The most significant bit (M) of the TONEGH/L register is the mantissa and the remaining bits (E3 to E0) denote the exponent. The output power of the each tone signal can be obtained by the following equation.

Tone signal power = Default signal power * TONEGH/L

Symbol	7	6	5	4	3	2	1	0
TONEGH (L)	–	–	–	M	E3	E2	E1	E0

The TONEGH & TONEL register can be programmed within the range from 0.0001B (0.0625 in decimal) to 1.0000B (1.0000 in decimal). Don't write the gain value above 1.0000, because the default power is the maximum available power. For example, if TONEGH & TONEL is set to 10H (1.0000 in binary or 1.0 in decimal) signal power of dual tone will be the same as the default power. If the TONEGH register is 0.0111H (0.4375 in decimal) and the TONEGL register 0.0110H (0.3750 in decimal), the signal power will be determined as follows.

20log(default power*0.4375) – 20log(default power) = 20log0.4375 = -7.16dB

20log(default power*0.3750) – 20log(default power) = 20log0.3750 = -8.50dB

The high tone power = -11.66dB

The low Tone power = -13.00dB

The default (reset) values of TONEGH & TONEGL are 00h .

The output power of TONEO signal also can be varied by change of the external R or C values and additional hardwares.

DTMF Tone Generation

To generate DTMF signal, TONEenable bit (FUNC.3) and DTONEonoff bit (TONES.2) must be set to '1' and the phase input data (Dfreq) for high and low tone, which are corresponding to DTMF frequencies, must be written in HTONE1, HTONE0, LTONE1 and LTONE0 as shown in Table 14-4.

Table 14-4. DTMF Frequencies Code and Phase Input Data

Character	*Low frequency*	*LTONE1:0*	*High frequency*	*HTONE1:0*
1	697Hz	1986H	1209Hz	2C46H
2	697Hz	1986H	1336Hz	30ECH
3	697Hz	1986H	1477Hz	3615H
4	770Hz	1C32H	1209Hz	2C46H
5	770Hz	1C32H	1336Hz	30ECH
6	770Hz	1C32H	1477Hz	3615H
7	852Hz	1F32H	1209Hz	2C46H
8	852Hz	1F32H	1336Hz	30ECH
9	852Hz	1F32H	1477Hz	3615H
0	941Hz	2274H	1336Hz	30ECH
*	941Hz	2274H	1209Hz	2C46H
#	941Hz	2274H	1477Hz	3615H
A	697Hz	1986H	1633Hz	3BCCH
B	770Hz	1C32H	1633Hz	3BCCH
C	852Hz	1F32H	1633Hz	3BCCH
D	941Hz	2274H	1633Hz	3BCCH

CAS Tone Generation

To generate CAS signal, TONEenable bit (FUNC.3) and DTONEonoff bit (TONES.1) must be set to '1' and the phase input data (Dfreq) for the high and low tone, which are corresponding to CAS frequencies, must be written in HTONE1, HTONE0, LTONE1 and LTONE0 as shown in Table 14-5.

Table 14-5. Dual Tone Frequency of CAS and Phase Input Data

Parameter	Values
Low tone frequency	2130Hz 0.1%
LTONE1:0	4DFEH
High tone frequency	2750Hz 0.1%
HTONE1:0	64B2H

FSK Data Generation

Tone generator is able to generate Frequency Shift Keying (FSK) signal that satisfies all kinds of target specification and capable of producing the sequence of channel seizure, mark and data bytes only by setting FSK mode register (FSKMOD) and FSKTD (FSK transmission data register), because it includes baud clock generator and FSK sequence generator. To generate FSK tone, the phase input data for space frequency must be written to HTONE1 and HTONE0, and the phase input values for mark frequency to LTONE1 and LTONE0. The frequency and phase input values of FSK are shown in Table 14-6.

Table 14-6. FSK Parameters

Specification	Space frequency	HTONE1:0	Mark frequency	LTONE1:0
Bell202	2200	508EH	1200	2BF0H
V.23	2100	4CE6	1300	2F9A
V.21	1180	2B36	980	23E2
Baud rate	1200 bps 1%			

The FSK generation function is enabled by setting TONE enable bit (FUNC register, bit 3) to "1" and FSK signal will be generated by setting FSK ON-OFF bit (TONES.0) to "1". In this case, DTONonoff bit must be set to "0"; if FSK ON-OFF is cleared to "0", FSK signal will not be generated. If the FSK generation fuction is ON, the FSK sequence generator, shown in Figure 14-20, automatically produces sequence of selection bit for mark and space frequency by baud rate.

FSK sequence includes channel seizure, mark and FSK data, and FSK data is composed of 10-bit data including start bit (space), a byte of data and stop bit (mark) as shown in Figure 14-5. Basically, FSK sequence generator receives the data of FSKTD and generates 10-bit FSK sequence by baud rate. When the MCU set FSK onoff bit to '1' after writing FSKTD and FSKMOD, FSK sequence generator loads the data of FSKTD and produces FSK transmission interrupt (FSKTint) while generating FSK sequence, so the MCU can write the next FSKTD data and FSKMOD in the interrupt service routine. After finishing transmission of 10-bit data, the generator continuously loads the next FSKTD and FSKMOD and produces FSKTint to receive the next FSK data until the FSK generation function disabled. To generate channel seizure signal, clear MARK enable (MARKenable) bit (FSKMOD register, bit 0: it determines the value of start bit; '1': MARK, '0': SPACE) and write '55H' to FSKTD register, then 10-bit sequence of channel seizure signal will be generated. To generate mark sequence, write 'FFH' to FSKTD and set MARKenable bit to '1', then 10-bit of mark sequence will be generated. Normal FSK data can be generated by clearing MARKenable bit to '0'. In this case, start (space) and stop (mark) bit will be attached to the head and tail of the data byte.

If you don't change the contents of FSKTD or FSKMOD after FSKTint has occured, the tone generator generates previous FSK tone. After sending all FSK data successfully, set FSKonoff bit to '0', and FSK sequence generation will be stopped after sending the last loaded data.

If TONEenable bit is cleared to '0', the tone generator stopped directly, so TONEenable bit must be remained as '1' until sending sequence of the last data has been finished. To prevent loosing the last data due to TONEenable bit reset, insert a dummy (no operation) interrupt routine after writing the last data and before clearing TONEenable bit.

The value of TONEGH is the gain factor of FSK, because FSK uses high tone generator,

NOTE

Please disable all other interrupts except for FSKTint while FSK sequence is generating to prevent the distortion of FSK sequencing time due to interrupt processing of other functions.

MELODY GENERATOR

S3C852B contains dual frequency generator for providing melody generation. The high frequency generator is a musical scale (melody - tone1) generator, and the low frequency generator makes the length of the musical scale (rhythm - tone2). The tone1 generator provides 3 octaves 36 music scales, and the tone2 generator is able to control the rhythm with multiples of $fx/2^{15}$ (109.24Hz) time scale.

The frequencies of 3 octave music scale is shown in Table 14-7.

Table 14-7. The Frequencies and MREF1 Register Values for 3 Octave Musical Scale

Scale	C3		C4		C5	
	Freq.	MREF1	Freq.	MREF1	Freq.	MREF1
C	130.8	099H	261.6	135H	523.2	269H
C#	138.9	0A3H	272.2	141H	554.3	28EH
D	146.8	0ACH	293.7	15AH	587.3	2B4H
D#	155.5	0B6H	311.1	16FH	622.2	2DEH
E	164.8	0C1H	329.6	185H	659.2	309H
F	174.6	0CDH	349.2	19CH	698.4	337H
F#	185.0	0D9H	370.0	1B4H	739.9	368H
G	196.0	0E6H	392.0	1CEH	783.9	39CH
G#	207.6	0F3H	415.3	1EAH	830.5	3D3H
A	220.0	102H	440.0	207H	879.9	40DH
A#	223.1	105H	466.2	20EH	932.2	44BH
B	246.9	121H	493.9	246H	987.7	48CH

The melody function can be enabled by MLDenable bit (FUNC register, bit 6). If MLDenable bit is "1", the melody tone (MLDT) is generated through MLDO pin (#58). If MLDenable bit is "0" the melody function is disabled and MLDT and MLDint will be stopped.

As shown in Table 14-9, tone1 (melody) can be generated by melody reference register MREF1. When MREF1 is set to 00H, the no melody tone is generated (mute). Tone2 (rhythm) is generated by melody reference register MREF2. The value of MREF2 is the scale factor of $fx/2^{15}$ (109.24Hz) duty cycle. Tone2 pulse generates MLDint interrupt. So user can program an interrupt service routine for melody generation. The routine is activated by MLDint and user can write new MREF1 and MREF2 data to create new musical scale and length in the melody interrupt service routines. For example, to generate one-time, insert 52H into MREF2 then the MLDint will occure every 0.75 second.

The block diagram of melody generator is shown in Figure 14-14.

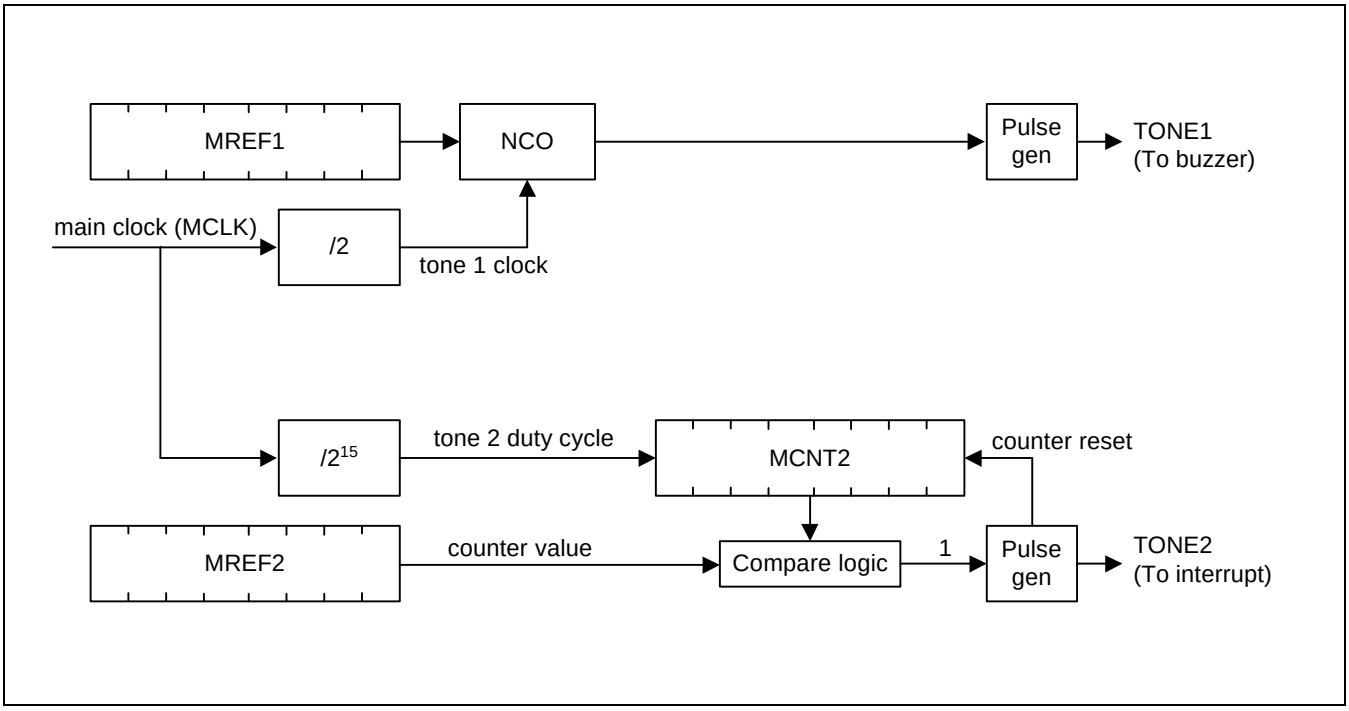

Figure 14-14. Block Diagram of Melody Generator

POWER-DOWN MODE OF CID BLOCK

The CID block of the S3C852B can be put in power-down mode by programming the PDW bit in the Mode register to "1". In this mode the input signal buffers, 14-bit ADC's, the reference bias generator of 14-bit ADC, the tone generator and clock input from MCU are switched off. However the Ring/Line Reversal detection can be active by programming the LRenable bit in the function register to be set. The serial interface can always be accessed, even in power-down mode. In power-down mode, if ring or line reversal occur when LRenable bit is "1", the LRint bit is set and an interrupt is generated. When the CID block of the S3C852B is put in power-down mode, all interrupt bits in the interrupt register of CID block cannot be set except for the LRint bit.

The Reset condition of CID block is power-down mode, that is, the default value of PWD bit is "1", so you should set the PWD bit to "0" to activate CID block.

INTERRUPT OF CID BLOCK

The CID interrupt (INT/P0.0) is active low. The flag in the interrupt register of CID block indicates the interrupt cause. Interrupt flags of the CID block are set by hardware but must be reset by software. All flags of the interrupt register are reset when the register is read via the serial interface.

The Table 14-8 shows interrupt sources of the CID block.

Table 14-8. Interrupt Sources of the CID Block

Source Block	Generation
Ring/line reversal detector	When LRstatus changes
FSK receiver	Reception of a new FSK data byte
Tone generator	Transmission of FSK data byte
CAS detector	When CASdetect changes
SDT detector	When SDTdetect changes
Melody generator	When the duration (MREF2) of current tone is expired

REGISTER MAPS OF CID BLOCK

The registers that are available in the CID block are shown in the following tables.

Table 14-9. Register Overview

Register Name	Address	Function	Default Value	Read/Write
MODE	00H	Mode register	1000 0000	Read/Write
FUNC	01H	Function register	0000 0000	Read/Write
TONES	02H	TONE select register	0000 0000	Read/Write
GTIME	0AH	Guard time register	0000 0000	Read/Write
MREF2	0BH	Melody generator Duration Control	0000 0000	Read/Write
MREF1H	0CH	Melody generator reference register (High)	0000 0000	Read/Write
MREF1L	0DH	Melody generator reference register (Low)	0000 0000	Read/Write
INTR	80H	Interrupt register	0000 0000	Read/Write
STAT	81H	Status register	0000 0000	Read Only
FSKDT	82H	FSK data register	0000 0000	Read Only
HTONE1	87H	MSB of high tone register	0000 0000	Read/Write
HTONE0	88H	LSB of high tone register	0000 0000	Read/Write
LTONE1	89H	MSB of low tone register	0000 0000	Read/Write
LTONE0	8AH	LSB of low tone register	0000 0000	Read/Write
TONEGH	90H	High tone output gain control register	0000 0000	Read/Write
TONEGL	91H	Low tone output gain control register	0000 0000	Read/Write
FSKTD	92H	FSK transmission data register	0000 0000	Read/Write
FSKMOD	93H	FSK mode register	0000 0000	Read/Write
CONT1	94H	Special control register1	0000 0000	Read/Write
CONT2	95H	Special control register2	0000 0000	Read/Write
TMODSEL	98H	Test Mode Selection Register	0000 0000	Read/Write
CASTh	99H	CAS/SDT Rejection Level Control Register	0010 0011	Read/Write

MODE — Mode Register

Address Page 8 00H; read/write

7	6	5	4	3	2	1	0
PDW	BOMDC	–	–	–	–	–	–

Description of MODE bits

Bit	Symbol	Description
MODE.7	PWD	1: Puts the CID block in power-down mode 0: Puts the CID block in active mode
MODE.6	BOMDC	0: Indicates that BOMdetection bit is set to "1" after beginning of mark has been detected 1: Indicates that BOMdetection bit is set to "1" after channel seizure has been detected

FUNC – Function Register

Address Page 8 01H; read/write.

7	6	5	4	3	2	1	0
BFS	MLDenable	SDTenable	–	TONEenable	FSKenable	CASenable	LRenable

Description of FUNC bits

Bit	Symbol	Description
FUNC.7	BFS	1: Selects the single-ended input buffer 0: Selects the differential input buffer
FUNC.6	MLDenable	1: Enables the melody generator 0: Disables the melody generator
FUNC.5	SDTenable	1: Enables the SDT detector 0: Disables the SDT detector
FUNC.4	–	Not used for S3C852B/P852B
FUNC.3	TONEenable	1: Enables the tone generator 0: Disables the tone generator
FUNC.2	FSKenable	1: Enables FSK receiver 0: Disables FSK receiver
FUNC.1	CASenable	1: Enables CAS detector 0: Disables CAS detector
FUNC.0	LRenable	1: Enables LR interrupts 0: Disables LR interrupts

TONES – Tone Select Register

Address Page 8 02H; read/write.

7	6	5	4	3	2	1	0
–	–	–	–	–	–	DTONonoff	FSKonoff

Description of TONES bits

Bit	Symbol	Description
TONES.1	DTONonoff	1: Enables dual tone output 0: Disables dual tone output
TONES.0	FSKonoff	1: Enables FSK tone output 0: Disables FSK tone output

GTIME – Guard Time Register

Address Page 8 0aH; read/write.

7	6	5	4	3	2	1	0
–	G6	G5	G4	G3	G2	G1	G0

Description of GTIME bits

Bit	Symbol	Description
GTIME.6 to GTIME.0	G6 to G0	Guard time to indicate the end of a line reversal or ring

MREF2 – Melody Reference Counter Register2

Adress Page 8 0bH; read/write

7	6	5	4	3	2	1	0
D7	D6	D5	D4	D3	D2	D1	D0

Description of MREF2 bits

Bit	Symbol	Description
MREF2H.7 to MREF2H.0	D7 to D0	The data of melody generator reference register 2

MREF1H –Melody Reference Counter Register1 (High Byte)

Address Page 8 0cH; read/write.

7	6	5	4	3	2	1	0
D7	D6	D5	D4	D3	D2	D1	D0

Description of MREF1H bits

Bit	Symbol	Description
MREF1H.7 to MREF1H.0	D7 to D0	The data of melody frequency (high byte)

MREF1L –Melody Reference Counter Register1 (Low Byte)

Address Page 8 0dH; read/write.

7	6	5	4	3	2	1	0
D7	D6	D5	D4	D3	D2	D1	D0

Description of MREF1H bits

Bit	Symbol	Description
MREF1L.7 to MREF1L.0	D7 to D0	The data of melody frequency (low byte)

INTR –Interrupt Register

Address Page 8 80H; read/write.

7	6	5	4	3	2	1	0
MLDint	FSKTint	SDTint	–	–	FSKint	CASint	LRint

Description of INTR bits

Bit	Symbol	Description
INTR.7	MLDint	1: Indicates that the current melody tone duration has been finished
INTR.6	FSKTint	1: indicates that previous FSK data transmission has been finished for FSK tone generation and is waiting for the next FSK data byte.
INTR.5	SDTint	1: Indicates that SDTdetect has been changed and a SDT interrupt has occurred
INTR.4		Not used for S3C852B/P852B
INTR.2	FSKint	1: Indicates that a new FSK data has been received
INTR.1	CASint	1: Indicates that CAS signal has been detected
INTR.0	LRint	1: Indicates that LRstatus has been changed and a LR interrupt has occurred.

NOTE: INTR register is cleared by S/W by writing “0”, but cannot write “1”

STAT –Status Register

Address Page 8 81H; read only.

7	6	5	4	3	2	1	0
–	–	SDTdetect	BOMdetect	–	–	CASdetect	LRstatus

Description of STAT bits

Bit	Symbol	Description
STAT.5	SDTdetect	1: Indicates that the SDT detector detects the signal that satisfies the specified frequency and energy level; 0: No more stutter dial tone is detected
STAT.4	BOMdetect	1: Indicates that the Begin Of the Mark period during FSK reception has been detected
STAT.1	CASdetect	1: Indicates that a CAS tone has been detected 0: No more CAS Tone is detected
STAT.0	LRstatus	1: LRint has not occurred until expiring GTIME (reset value) 0: LRint has occurred before expiring GTIME

FSKDT – FSK Data Register

Address Page 8 82H; read only.

7	6	5	4	3	2	1	0
D7	D6	D5	D4	D3	D2	D1	D0

Description of FSKDT bits

Bit	Symbol	Description
FSKDT.7 to FSKDT.0	D7 to D0	Last received FSK data byte

HTONE1 – MSB of High Tone Register

Address Page 8 87H; read/write.

7	6	5	4	3	2	1	0
D7	D6	D5	D4	D3	D2	D1	D0

Description of HTONE1 bits

Bit	Symbol	Description
HTONE1.7 to HTONE1.0	D7 to D0	MSB of 16-bit high tone register

HTONE0 – LSB of High Tone Register

Address Page 8 88H; read/write.

7	6	5	4	3	2	1	0
D7	D6	D5	D4	D3	D2	D1	D0

Description of HTONE0 bits

Bit	Symbol	Description
HTONE0.7 to HTONE0.0	D7 to D0	LSB of 16-bit high tone register

LTONE1 – MSB of Low Tone Register

Address Page 8 89H; read/write.

7	6	5	4	3	2	1	0
D7	D6	D5	D4	D3	D2	D1	D0

Description of LTONE1 bits

Bit	Symbol	Description
LTONE1.7 to LTONE1.0	D7 to D0	MSB of 16-bit low tone register

LTONE0 – LSB of Low Tone Register

Address Page 8 8AH; read/write.

7	6	5	4	3	2	1	0
D7	D6	D5	D4	D3	D2	D1	D0

Description of LTONE0 bits

Bit	Symbol	Description
LTONE0.7 to LTONE0.0	D7 to D0	LSB of 16-bit low tone register

TONEGH – High Tone Output Gain Control Register

Address Page 8 90H; read/write

7	6	5	4	3	2	1	0
–	–	–	D4	D3	D2	D1	D0

Description of TONEGH bits

Bit	Symbol	Description
TONEGH.7 to TONEGH.0	D7 to D0	This byte multiplied to control the output gain of TONE generator

TONEGL – Low Tone Output Gain Control Register

Address Page 8 91H; read/write

7	6	5	4	3	2	1	0
–	–	–	D4	D3	D2	D1	D0

Description of TONEGL bits

Bit	Symbol	Description
TONEGL.7 to TONEGL.0	D7 to D0	This byte multiplied to control the output gain of TONE generator

FSKTD – FSK Transmission Data Register

Address Page 8 92H; read/write.

7	6	5	4	3	2	1	0
D7	D6	D5	D4	D3	D2	D1	D0

Description of FSKTD bits

Bit	Symbol	Description
FSKTD.7 to FSKTD.0	D7 to D0	This byte is the FSK data to be transmitted.

FSKMOD – FSK Mode Register

Address Page 8 93H; read only.

7	6	5	4	3	2	1	0
–	–	–	–	–	–	–	MARKen

Description of FSKMOD bits

Bit	Symbol	Description
FSKMOD.0	MARKen	1: Set FSK start bit to MARK for MARK sequence generation 0: Set FSK start bit to space for normal FSK data generation

CONT1 – Special Control Register

Address Page 8 94H; read/write

7	6	5	4	3	2	1	0
1	1	0	0	0	1	1	1

This register should be written with "1100 0111b"

CONT2 – Special Control Register

Address Page 8 95H; read/write

7	6	5	4	3	2	1	0
MCLKSEL	0	0	0	0	0	0	0

This register should be written with "X000 0000b"

Description of CONT2 bits

Bit	Symbol	Description
CONT2.7	MCLKSEL	1: Set MCU main clock to 7.15909MHz 0: Set MCU main clock to 3.579545MHz

TMODESEL – Test Mode Selection Register

Address Page 8 98H; read/write

7	6	5	4	3	2	1	0
0	0	0	0	0	0	0	0

This register should be written with "0000 0000b"

CASth – CAS/SDT Threshold Control Register

Address Page 8 99H; read/write

7	6	5	4	3	2	1	0
0	0	1	0	0	0	1	1

This register should be written with "0011 0011b"

NOTES

1. To allow for future extensions, reserved bits (indicated with "-") must be written with "0".
2. When reading from a register, the reserved bits (indicated with "-") return an undefined value (either "0" or "1").

NOTES

15 A/D CONVERTER

OVERVIEW

The 10-bit A/D converter (ADC) module uses successive approximation logic to convert analog levels entering at one of the four input channels to equivalent 10-bit digital values. The analog input level must lie between the AV_{REF} and AV_{SS} values. The A/D converter has the following components:

— Analog comparator with successive approximation logic

— D/A converter logic (resistor string type)

— ADC control register, ADCON (set 1, bank 1, F4H, read/write, but ADCON.3 is read only)

— Four multiplexed analog data input pins (ADC0–ADC3)

— 10-bit A/D conversion data output register (ADDATAH, ADDATAL)

— Internal AV_{REF} and AV_{SS}

FUNCTION DESCRIPTION

To initiate an analog-to-digital conversion procedure, at first, you must configure P1.0–P1.3 to analog input before A/D conversions because the P1.0 – P1.3 pins can be used alternatively as normal data I/O or analog input pins. To do this, you load the appropriate value to the P1AFS.0 – P1AFS.3 (for ADC0 – ADC3) register. And you write the channel selection data in the A/D converter control register ADCON to select one of the four analog input pins (ADCn, n = 0–3) and set the conversion start or enable bit, ADCON.0.
An 10-bit conversion operation can be performed for only one analog input channel at a time.
The read-write ADCON register is located in set 1, bank 1 at address F4H.

During a normal conversion, ADC logic initially sets the successive approximation register to 200H (the approximate half-way point of an 10-bit register). This register is then updated automatically during each conversion step. The successive approximation block performs 10-bit conversions for one input channel at a time. You can dynamically select different channels by manipulating the channel selection bit value (ADCON.5–4) in the ADCON register.

To start the A/D conversion, you should set the enable bit, ADCON.0. When a conversion is completed, ACON.3, the end-of-conversion (EOC) bit is automatically set to 1 and the result is dumped into the ADDATAH, ADDATAL registers where it can be read. The ADC module enters an idle state. Remember to read the contents of ADDATAH and ADDATAL before another conversion starts. Otherwise, the previous result will be overwritten by the next conversion result.

NOTE

Because the ADC does not use sample-and-hold circuitry, it is important that any fluctuations in the analog level at the ADC0–ADC3 input pins during a conversion procedure be kept to an absolute minimum. Any change in the input level, perhaps due to circuit noise, will invalidate the result.

A/D CONVERTER CONTROL REGISTER (ADCON)

The A/D converter control register, ADCON, is located in set1, bank 1 at address F4H. ADCON is read-write addressable using 8-bit instructions only. But EOC bit, ADCON.3 is read only. ADCON has four functions:

— Bits 5–4 select an analog input pin (ADC0–ADC3).

— Bit 3 indicates the end of conversion status of the A/D conversion.

— Bits 2–1 select a conversion speed.

— Bit 0 starts the A/D conversion.

Only one analog input channel can be selected at a time. You can dynamically select any one of the four analog input pins, ADC0–ADC3 by manipulating the 2-bit value for ADCON.5–ADCON.4

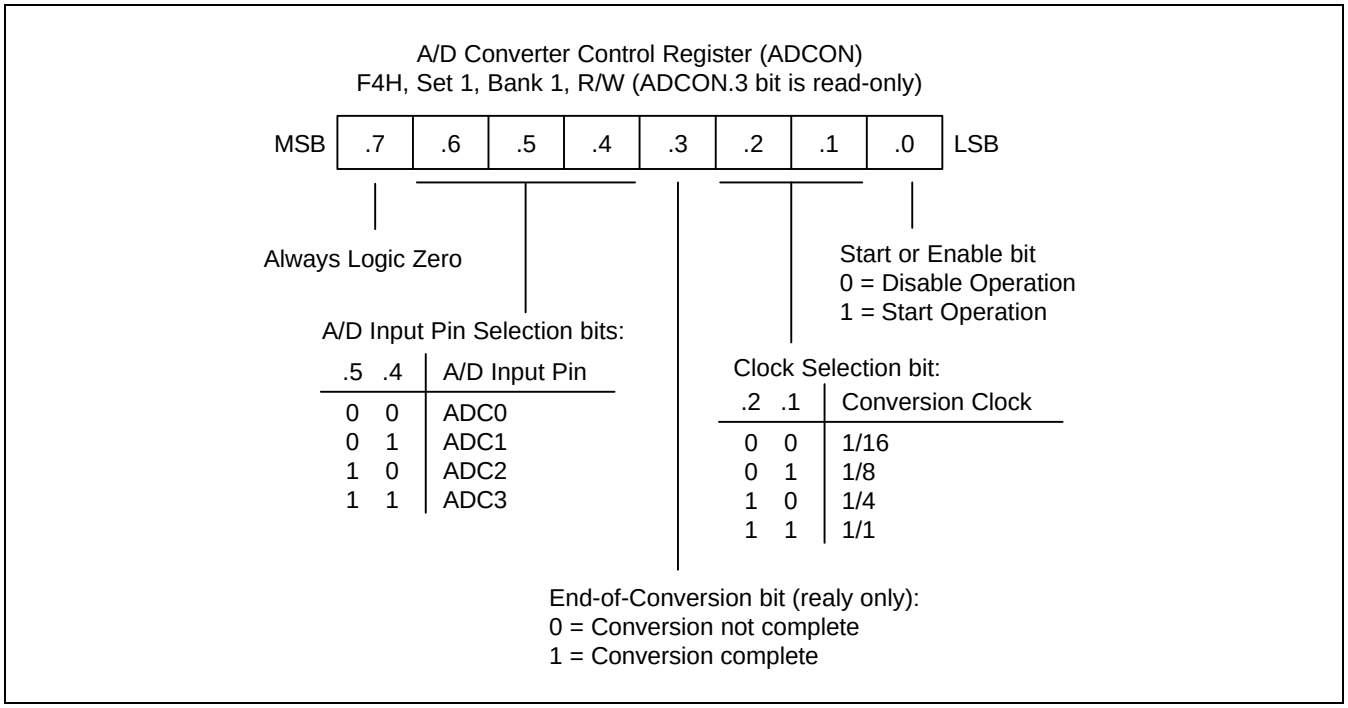

Figure 15-1. A/D Converter Control Register (ADCON)

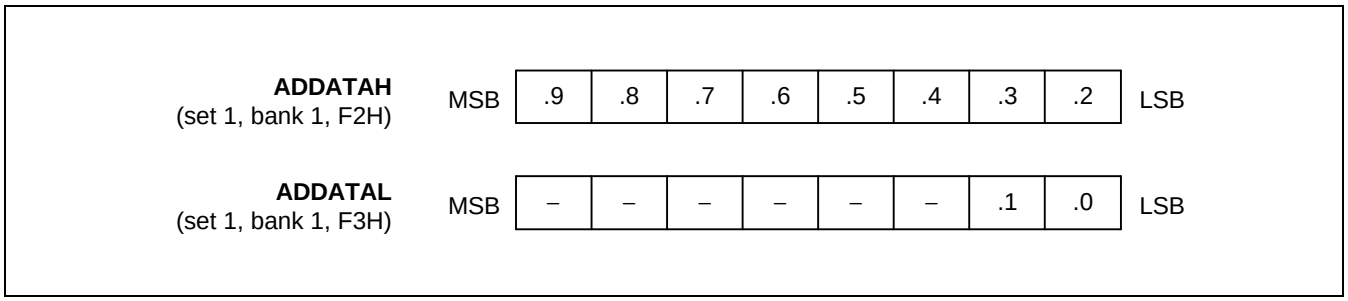

Figure 15-2. A/D Converter Data Register (ADDATAH/ADDATAL)

INTERNAL REFERENCE VOLTAGE LEVELS

In the ADC function block, the analog input voltage level is compared to the reference voltage. The analog input level must remain within the range AV_{SS} to AV_{REF} (AV_{REF} = V_{DD}).

Different reference voltage levels are generated internally along the resistor tree during the analog conversion process for each conversion step. The reference voltage level for the first bit conversion is always 1/2 AV_{REF}.

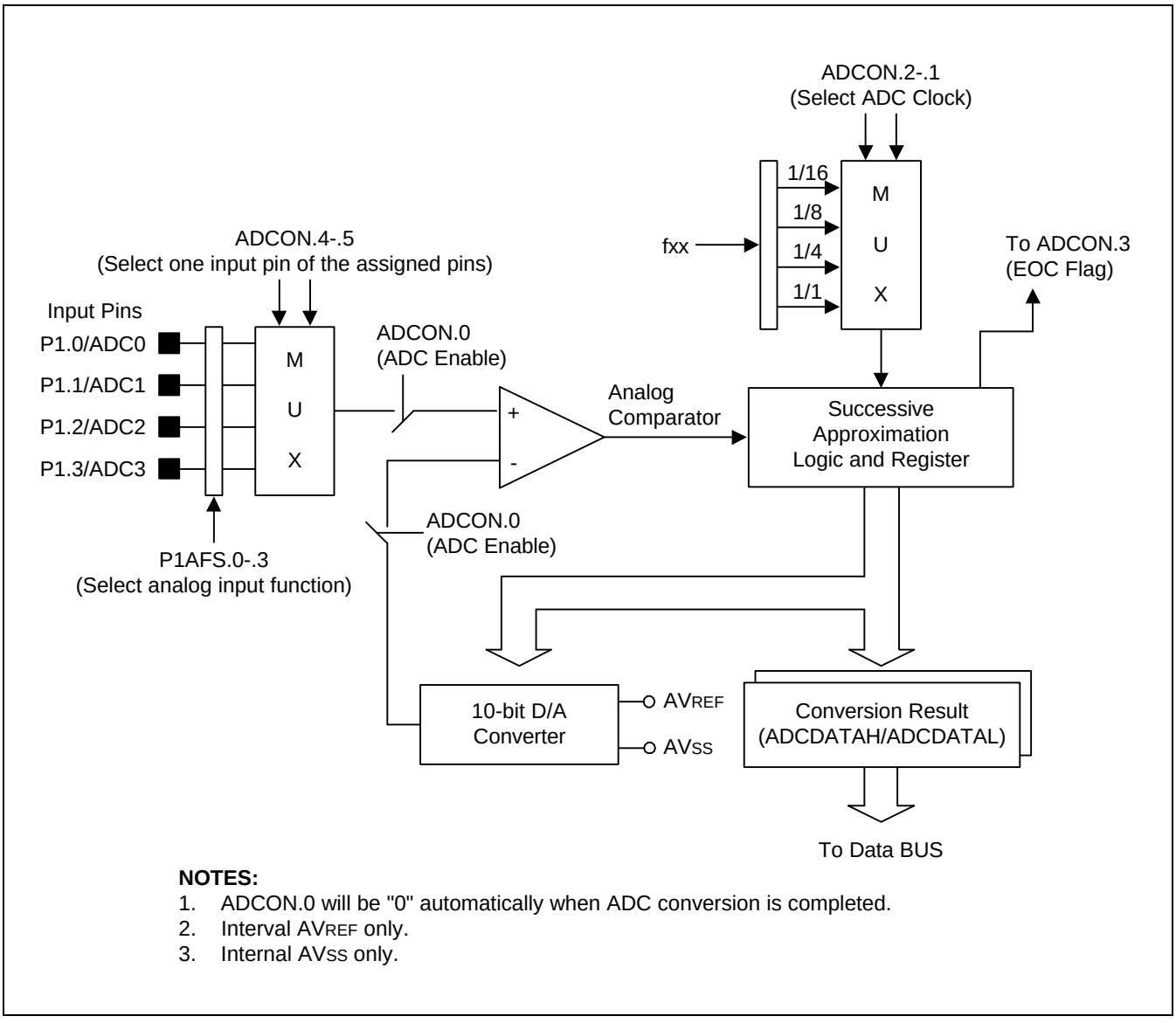

NOTES:
1. ADCON.0 will be "0" automatically when ADC conversion is completed.
2. Interval AVREF only.
3. Internal AVSS only.

Figure 15-3. A/D Converter Circuit Diagram

CONVERSION TIMING

The A/D conversion process requires 4 steps (4 clock edges) to convert each bit and 10 clocks to step-up A/D conversion. Therefore, total of 50 clocks are required to complete an 10-bit conversion: With an 10 MHz CPU clock frequency, one clock cycle is 400 ns (4/fxx). If each bit conversion requires 4 clocks, the conversion rate is calculated as follows:

4 clocks/bit x 10-bits + step-up time (10 clock) = 50 clocks
50 clock x 400 ns = 20 µs at 10 MHz, 1 clock time = 4/fxx

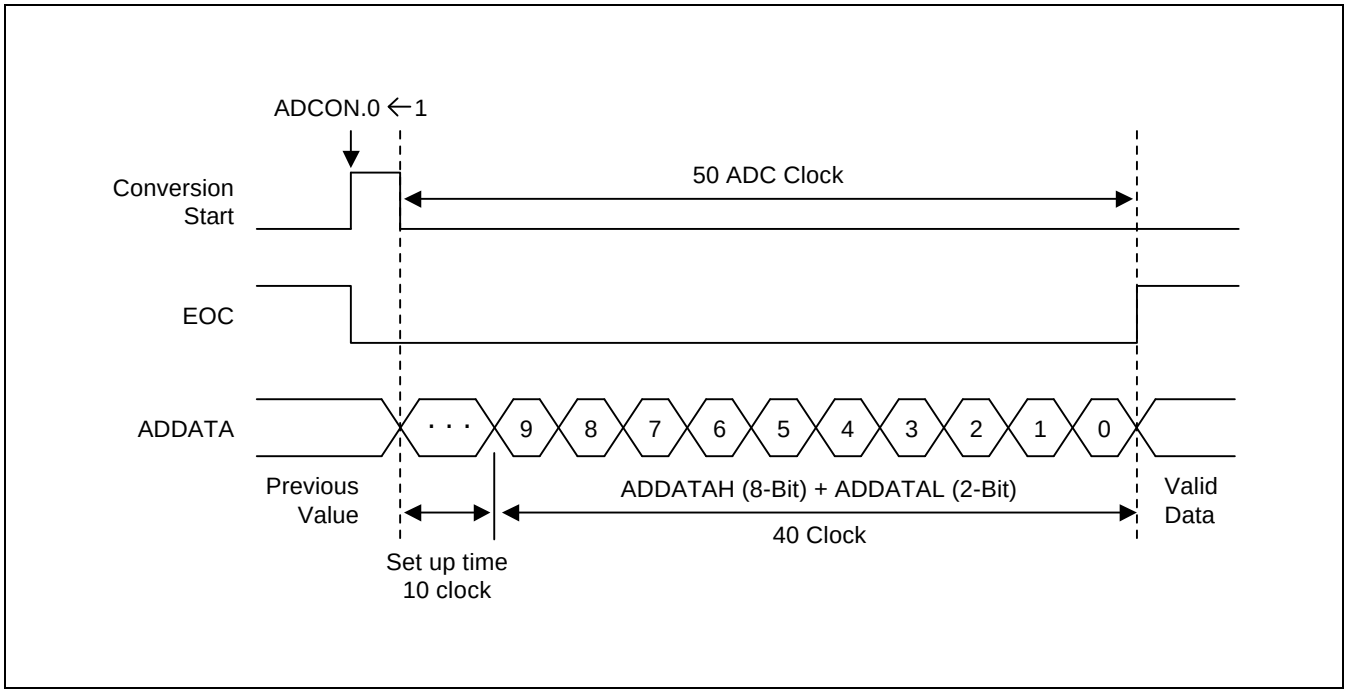

Figure 15-4. A/D Converter Timing Diagram

INTERNAL A/D CONVERSION PROCEDURE

1. Analog input must remain between the voltage range of AV_{SS} and AV_{REF}.
2. Configure P1.0–P1.3 for analog input before A/D conversions. To do this, you load the appropriate value to the P1AFS.0–P1AFS.3 (for ADC0–ADC3) register.
3. Before the conversion operation starts, you must first select one of the four input pins (ADC0–ADC3) by writing the appropriate value to the ADCON register.
4. When conversion has been completed, (50 clocks have elapsed), the EOC, ADCON.3 flag is set to "1", so that a check can be made to verify that the conversion was successful.
5. The converted digital value is loaded to the output register, ADDATAH (8-bit) and ADDATAL (2-bit), than the ADC module enters an idle state.
6. The digital conversion result can now be read from the ADDATAH and ADDATAL register.

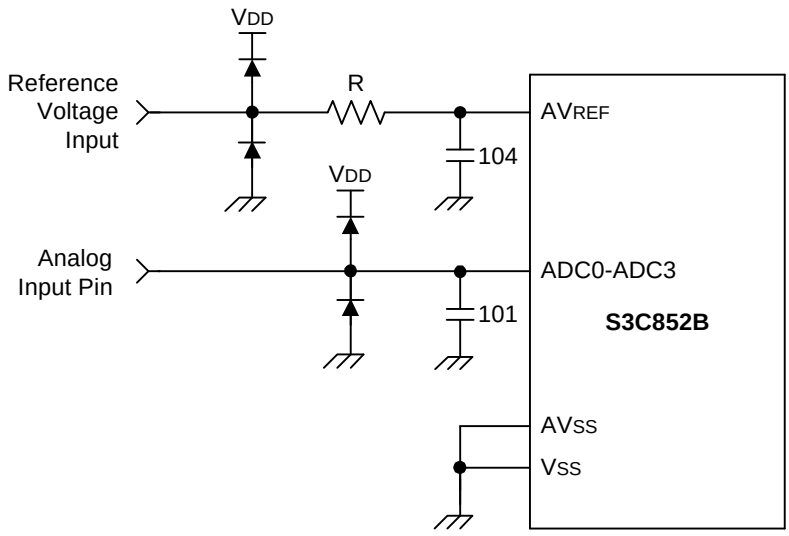

NOTE: The symbol "R" signifies an offset resistor with a value of from 50 to 100 Ω.

Figure 15-5. Recommended A/D Converter Circuit for Highest Absolute Accuracy

☞ PROGRAMMING TIP — Configuring A/D Converter

```
                •
                •
                SB0
                LD      P1AFS,#00001111B    ;  P1.3–P1.0 A/D Input MODE
                •
                •

                SB1
                LD      ADCON,#00000001B    ;  Channel AD0: P1.0/Conversion start
AD0_CHK:        TM      ADCON,#00001000B    ;  A/D conversion end ? → EOC check
                JR      Z,AD0_CHK           ;  No

                LD      AD0BUFH,ADDATAH     ;  8-bit Conversion data
                LD      AD0BUFL,ADDATAL     ;  2-bit Conversion data
                SB0
                •
                •

                SB1
                LD      ADCON,#00110001B    ;  Channel AD3: P1.3/Conversion start
AD6_CHK:        TM      ADCON,#00001000B    ;  A/D conversion end ? → EOC check
                JR      Z,AD6_CHK           ;  No

                LD      AD6BUFH,ADDATAH     ;  8-bit Conversion data
                LD      AD6BUFL,ADDATAL     ;  2-bit Conversion data
                SB0
                •
                •
```

16 EXTERNAL INTERFACE

OVERVIEW

The S3C8 architecture supports accesses to memory and other peripheral devices over an external memory interface. Both program and data memory areas can be accessed over the 16-bit address and an 8-bit data bus. Instruction code can be fetched from external program memory. If external program memory is implemented in a RAM-type device, you can write data to this memory space.

The S3C852B has 100 pins in its QFP-type package, 80 of which are used for I/O. Of these 80 pins, up to 28 can alternately be configured as external interface lines. The on-chip ROM contains 64 K bytes of program memory. Because the address bus carries 16-bit addresses, up to 64 K bytes of external memory space is supported.

Using the ROM-less operating mode, you can configure up to 64 K bytes of program memory space externally. To configure the S3C852B to ROM-less mode, you must first tie the EA pin to VDD. Then, when a power-on reset occurs, the external interface lines at port 3, port 4, port 5 and port 6 are configured automatically.

A 64-Kbyte external data memory can also be implemented using the external peripheral interface. A data memory (DM) signal line (P3.1) selects data memory during external data accesses. DM output remains high level whenever instructions are being fetched or when the external program memory is being accessed. DM output goes active low when an external data memory location is addressed.

To initialize the external interface, you must configure ports 3, 4, 5 and 6. Port 4 pins are configured as data bus lines D0–D7 and port 5 pins are configured as address bus lines A0–A7. Port 6 pins can be configured as needed to provide up to eight more address lines (A8–A15).

The external program memory and data memory is controlled and selected by the program memory select signal (PM), the data memory signal (DM), the read signal (RD), and the write signal (WR). These select and control lines (PM, DM, RD, WR) are configured by bit settings in the port 3 alternative function select register, P3AFS.

The port 4, 5, 6 control registers, port 3 alternative function select register and two system registers are used to program the external interface. The two system registers are the system mode register, SYM, and the external memory timing register, EMT. SYM.7 is the enable bit for the tri-state interface function. When tri-stating is enabled, the bus control lines of the external interface ‘float’ at high impedance. This feature is useful for applications requiring a shared external bus and for multiprocessor applications. EMT register contains a control bit for selecting an external or internal stack area.

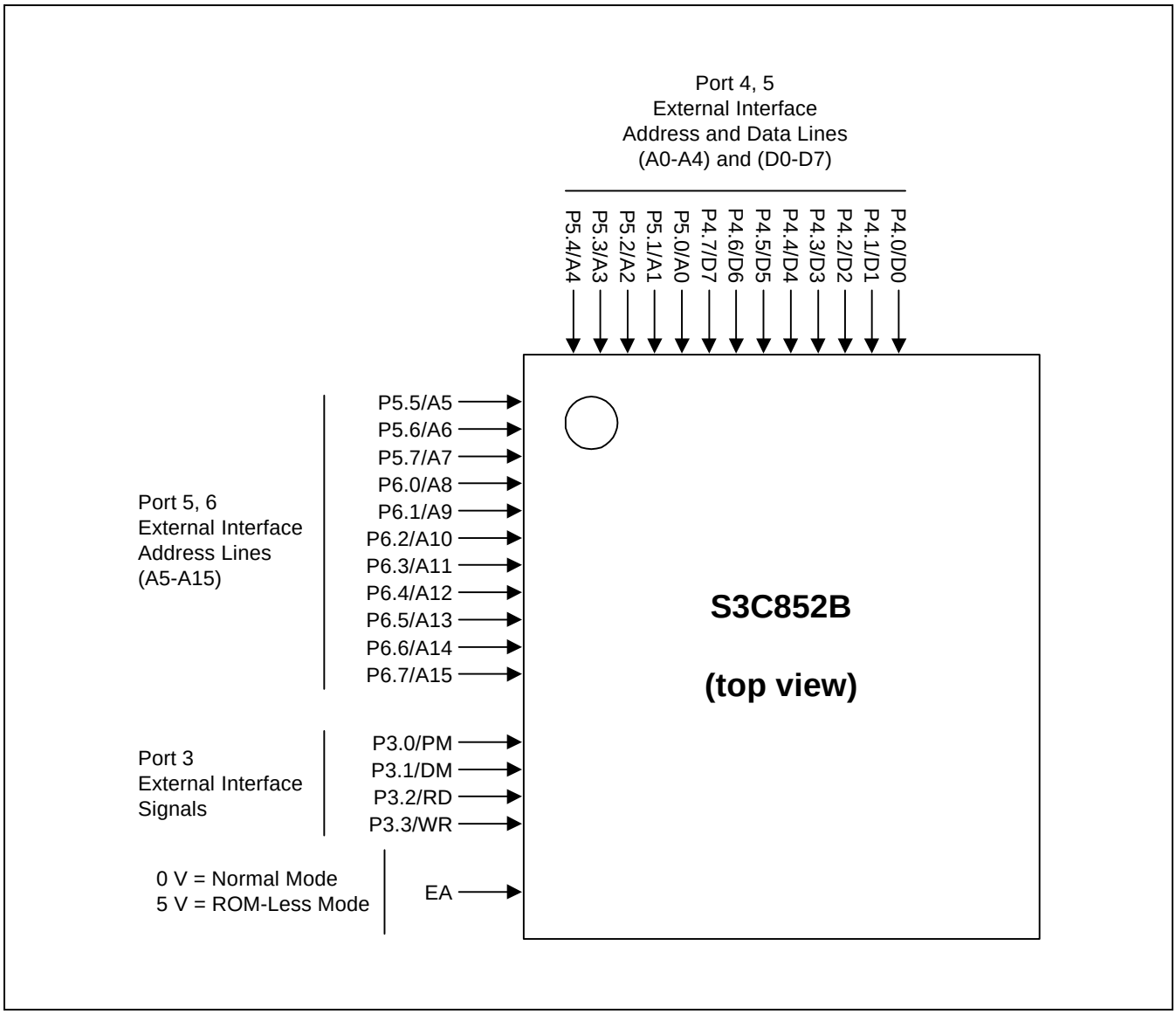

Figure 16-1. S3C852B External Memory Interface Function diagram

CONFIGURATION OPTIONS FOR EXTERNAL PROGRAM MEMORY

Program memory (ROM) stores program code and table data. Instructions can be fetched, or data read, from ROM locations. The S3C852B has 64 K bytes internal mask-programmable ROM (locations 0H–FFFFH).

Also. Using the external interface, it is possible to configure additional program memory space externally for applications. There are one way to configure external program memory:

Option 1: Using the ROM-less mode option, configure the entire 64-Kbyte area (0000H–FFFFH) externally.

Option 1: Using ROM-less Mode to Configure 64-Kbytes of Program Memory Externally

Option 1 will usually be chosen if external program memory is required.

To configure the entire 64-Kbyte ROM address range externally, you must configure the S3C852B to operate in ROM-less mode. This is done by applying 5 V to the EA pin (pin 19). You may recall that the S3C852B operates in normal (64-Kbyte internal ROM) mode when 0 V is applied to the EA pin.

In ROM-less mode, access to the internal ROM is disabled. A reset automatically configures the external interface lines at ports 3, 4, 5 and 6. Please note that the 5 V must be applied to the EA pin prior to RESET and must remain at the 5-volt level during normal operation. You should not change the default settings in the port 3, 4, 5 and 6 control registers during normal operation. Otherwise the external interface may be disabled.

If you plan to implement Option 1, the S3C852B's internal 64-Kbyte ROM does not need to be mask-programmed.

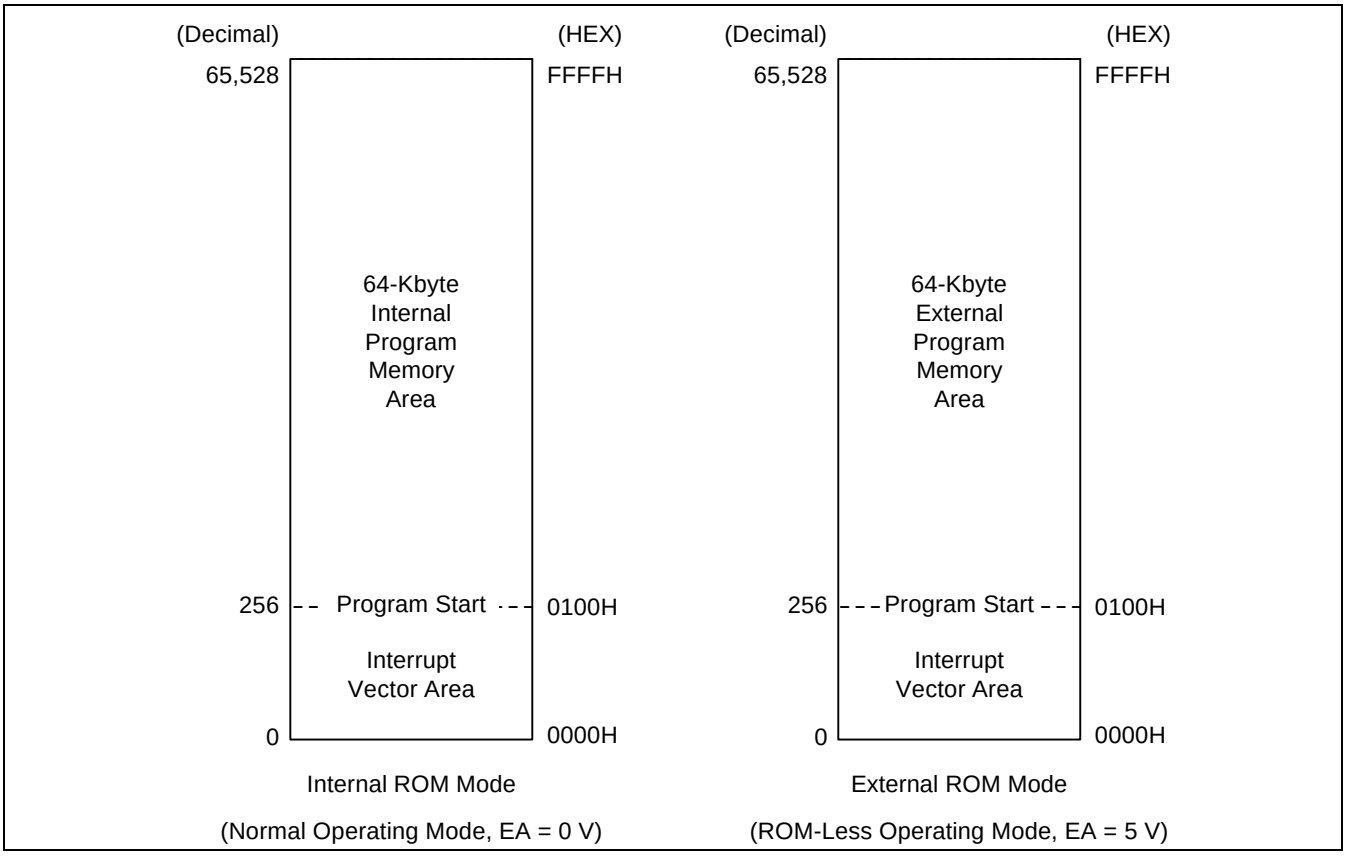

Figure 16-2. Internal and External Program Memory Options

EXTERNAL INTERFACE CONTROL REGISTERS

The following registers are used to configure and control the external peripheral interface:

— System mode register, SYM
— External memory timing register, EMT
— Port 3 alternative function select register, P3AFS
— Port 4 control register, P4CON
— Port 5 control register, P5CON
— Port 6 control register, P6CON

Detailed descriptions of each of these registers can be found in Part I, Section 4, "Control Registers."

SYSTEM MODE REGISTER (SYM)

The system mode register SYM controls interrupt processing and also contains the enable bit (SYM.7) for the 3-state external memory interface.

SYM is located in set 1 at address DEH and can be read or written by 1-bit and 8-bit instructions. When 3-stating is enabled, the lines of the external memory interface 'float' in a high-impedance state. 3-stating is commonly used multiprocessing applications that require a shared external bus.

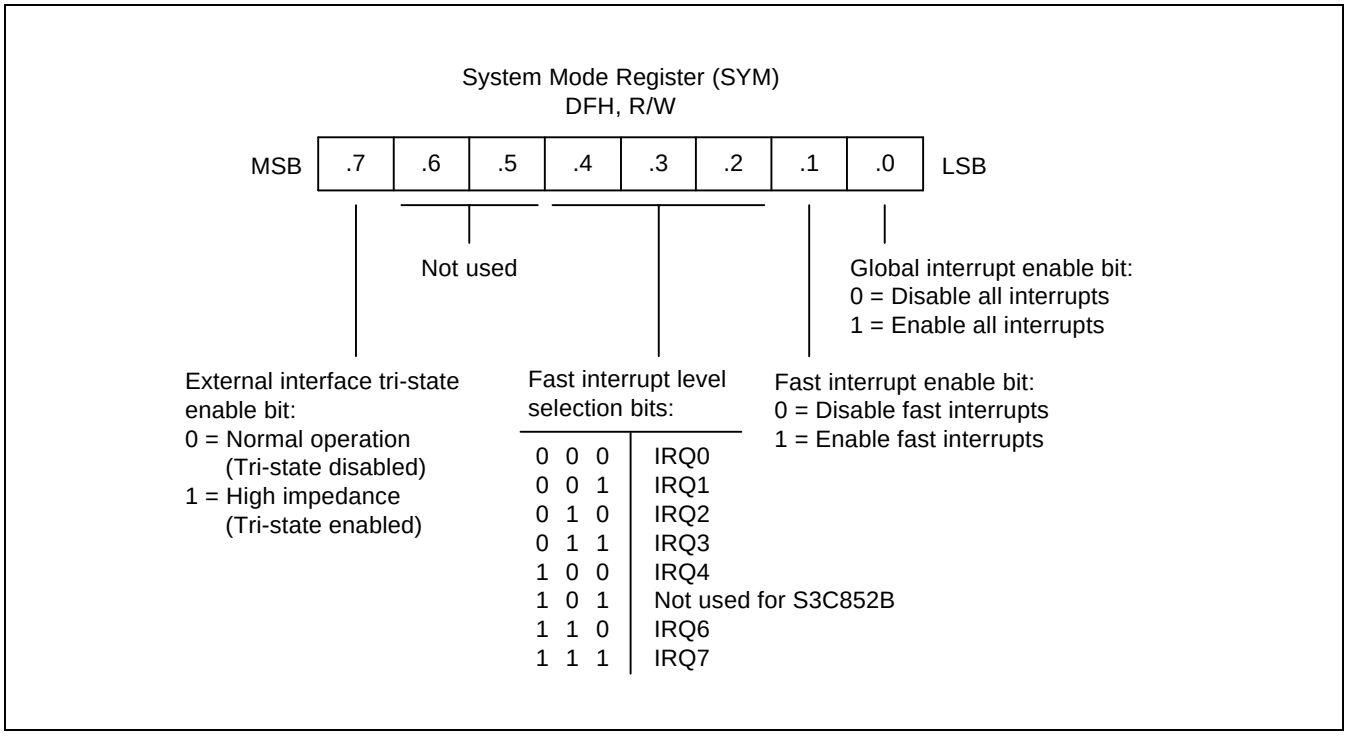

Figure 16-3. System Mode Register (SYM)

EXTERNAL MEMORY TIMING REGISTER (EMT)

The external memory timing register, EMT, is used to control bus operations for external peripheral interface, including:

— Stack area selection (external or internal area)

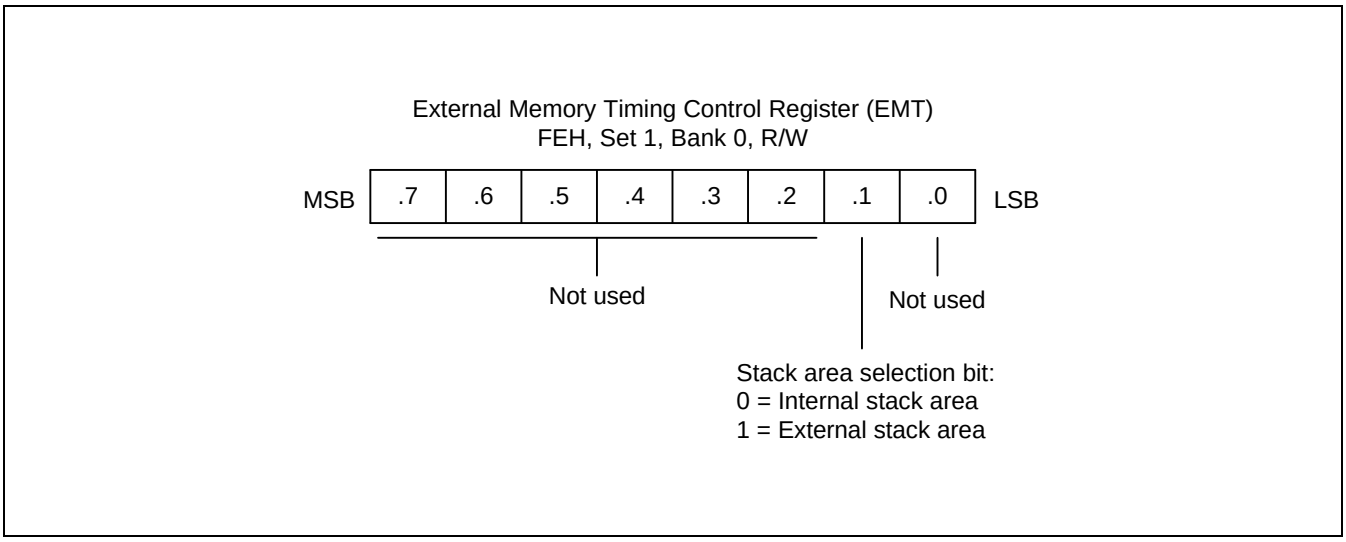

Figure 16-4. External Memory Timing Control Register (EMT)

PORT 3 ALTERNATIVE FUNCTION SELECT REGISTER (P3AFS)

The P3AFS register is used to configure the port 3 pins, P3.0–P3.3, as control signal lines for the external interface. In normal operating mode a reset clears P3AFS to '00H', configuring P3.0–P3.3 as normal I/O port. In ROM-less mode, a reset automatically configures these pins as bus control lines. Bit settings in the P3AFS register activate P3.0–P3.3 as external memory control lines PM, DM, RD, WR, respectively.

PORT 4 CONTROL REGISTER (P4CON)

The port 4 control register, P4CON is used to configure the data lines D0–D7. In normal (internal ROM) mode, a reset clears P4CON to '00H', thereby configuring P4.0–P4.7 to Schmitt trigger input mode. When using the S3C852B in ROM-less mode, a reset automatically configures P4.0–P4.7 as data lines D0–D7, respectively.

PORT 5 CONTROL REGISTER (P5CON)

The port 5 control register, P5CON is used to configure the address lines A0–A7. In normal (internal ROM) mode, a reset clears P5CON to '00H', thereby configuring P5.0–P5.7 to Schmitt trigger input mode. When using the S3C852B in ROM-less mode, a reset automatically configures P5.0–P5.7 as address lines A0–A7, respectively.

PORT 6 CONTROL REGISTER (P6CON)

The port 6 control register, P6CON is used to configure the address lines A8–A15. In normal (internal ROM) mode, a reset clears P6CON to '00H', thereby configuring P6.0–P6.7 to Schmitt trigger input mode. When using the S3C852B in ROM-less mode, a reset automatically configures P6.0–P6.7 as address lines A8–A15, respectively.

If you do not need all of the port 6 address lines for your application, you can use the remaining port 6 pins for general I/O. In this case, read operations will return valid port data only from the pins you configure for general I/O.

Table 16-1. Control Register Overview for the External Interface

Register	Location	Description
SYM	DEH, set 1	External tri-state interface enable bit (SYM.7)
EMT	FEH, set 1, bank 0	External/internal stack selection control
P3AFS	F2H, set 1, bank 0	Select program memory signal (PM) at P3.0
		Select data memory signal (DM) at P3.1
		Enable read signal (RD) at P3.2
		Enable write signal (WR) at P3.3
P4CON	F3H, set 1, bank 0	Configure data lines D0–D7 at P4.0–P4.7
P5CON	F4H, set 1, bank 0	Configure address lines A0–A7 at P5.0–P5.7
P6CON	F5H, set 1, bank 0	Configure address lines A8–A15 at P6.0–P6.7

NOTE: When the S3C852B is used in ROM-less mode (that is, when the EA pin is High level), a reset sets ports 3, 4, 5 and 6 to external interface pins. Access to the internal ROM is disable, and the entire 64-Kbyte program memory address range is addressed externally over the external interface.

Table 16-2. External Interface Control Register Values after a RESET (Normal Mode)

Register Name	Mnemonic	Address		Bit Values after Reset (EA Low)							
		Dec	Hex	7	6	5	4	3	2	1	0
System mode register	SYM	222	DEH	0	–	–	x	x	x	0	0
Port 3 alternative function select register	P3AFS	242	F2H	–	–	–	–	0	0	0	0
Port 4 control register	P4CON	243	F3H	0	0	0	0	0	0	0	0
Port 5 control register	P5CON	244	F4H	0	0	0	0	0	0	0	0
Port 6 control register	P6CON	245	F5H	0	0	0	0	0	0	0	0
External memory timing register	EMT	254	FEH	–	1	1	1	1	1	0	–

NOTE: A dash (–) indicates that the bit is not used or not mapped; an 'x' means that the value is undefined after a reset.

Table 16-3. External Interface Control Register Values after a RESET (ROM-less Mode)

Register Name	Mnemonic	Address		Bit Values after RESET (EA High)							
		Dec	Hex	7	6	5	4	3	2	1	0
Port 3 alternative function select register	P3AFS	242	F2H	–	–	–	–	1	1	1	1

NOTE: In ROM-less operating mode, a reset initializes all external interface control registers to their normal reset values, with the exception of P3AFS. However, the external interface pins at port 4, port 5, port 6 and P3.0–P3.3 are internally configured to external interface mode.

CONFIGURING SEPARATE EXTERNAL PROGRAM AND DATA MEMORY AREAS

You can address external program and data memory locations as a single combined space or as two separate spaces. If the program and data memory spaces are implemented separately, this separation is maintained logically using the data and program memory select signal (DM and PM).

To select external data memory, you must set the bit 1 in the port3 alternative function select register, P3AFS.1, to “1”, because the P3AFS.1 bit enable the DM output pin. The DM output is controlled automatically by hardware, that is, DM pin’s state goes active Low to select the data memory area whenever one of the following instructions is executed:

These instructions are used for accessing the external data and program memory.

— LDE (Load external data memory)
— LDED (Load external data memory and decrement)
— LDEI (Load external data memory and increment)
— LDEPD (Load external data memory with pre-decrement)
— LDEPI (Load external data memory with pre-increment)

If you set the stack area selection bit in the EMT register, EMT.1 to "1", the system stack area is configured externally. In this case, the DM signal will go active low whenever a CALL, POP, PUSH, RET, or IRET instruction is executed.

Using An External System Stack

The KS88 architecture supports stack operations in either the internal register file or in externally configured data memory. The PUSH and POP instructions support external system stack operations.

To select the external stack area option, you must set bit 1 in the external memory timing register (EMT, FEH) to "1".

NOTE

The instruction you use to modify the stack selection bit in the EMT register should not be immediately followed by an instruction that uses the stack. This could cause a program error. Also, remember to disable interrupts by executing a DI instruction before you modify the stack selection bit.

A 16-bit stack pointer value (SPH and SPL) is required for external stack operations. After a reset, the SP values are undetermined.

Return addresses for procedure calls and interrupts, as well as dynamically generated data are stored on an externally-defined stack. The contents of the PC are saved on the external stack during a CALL instruction and restored by a RET instruction. When an interrupt occurs, the contents of the PC and the FLAGS register are saved to the external stack. These values are then restored by an IRET instruction.

EXTERNAL BUS OPERATIONS

The number of machine cycles that are required for external memory operations is two machine cycle.

The notation used to describe basic timing periods in Figures 16-5 to 16-12 are machine cycles (Mn), timing states (Tn), and clock periods. The clock wave form is shown for clarification only and does not have a specific timing relationship to the other signals.

Controlling External Bus Operations

Whenever the S3C852B/P852B external peripheral interface is active, the addresses of all internal program memory references will also appear on the external bus. This should have no effect on the external system, however, because the RD and WR signals are always high. (RD and WR goes low only during external memory references.)

Shared Bus Feature

The RD, WR, DM, PM signals, address, and data bus can be set to high impedance to enable the S3C852B/P852B to share common resources with other bus masters. This feature is often required for multiprocessor or related applications that require two or more devices that share the same external bus.

The tri-state memory interface enable bit in the system mode register (SYM.7) controls this function. When SYM.7 = "1", the tri-state function is enabled, all external interface lines are set to high impedance, and the external bus is put under software control.

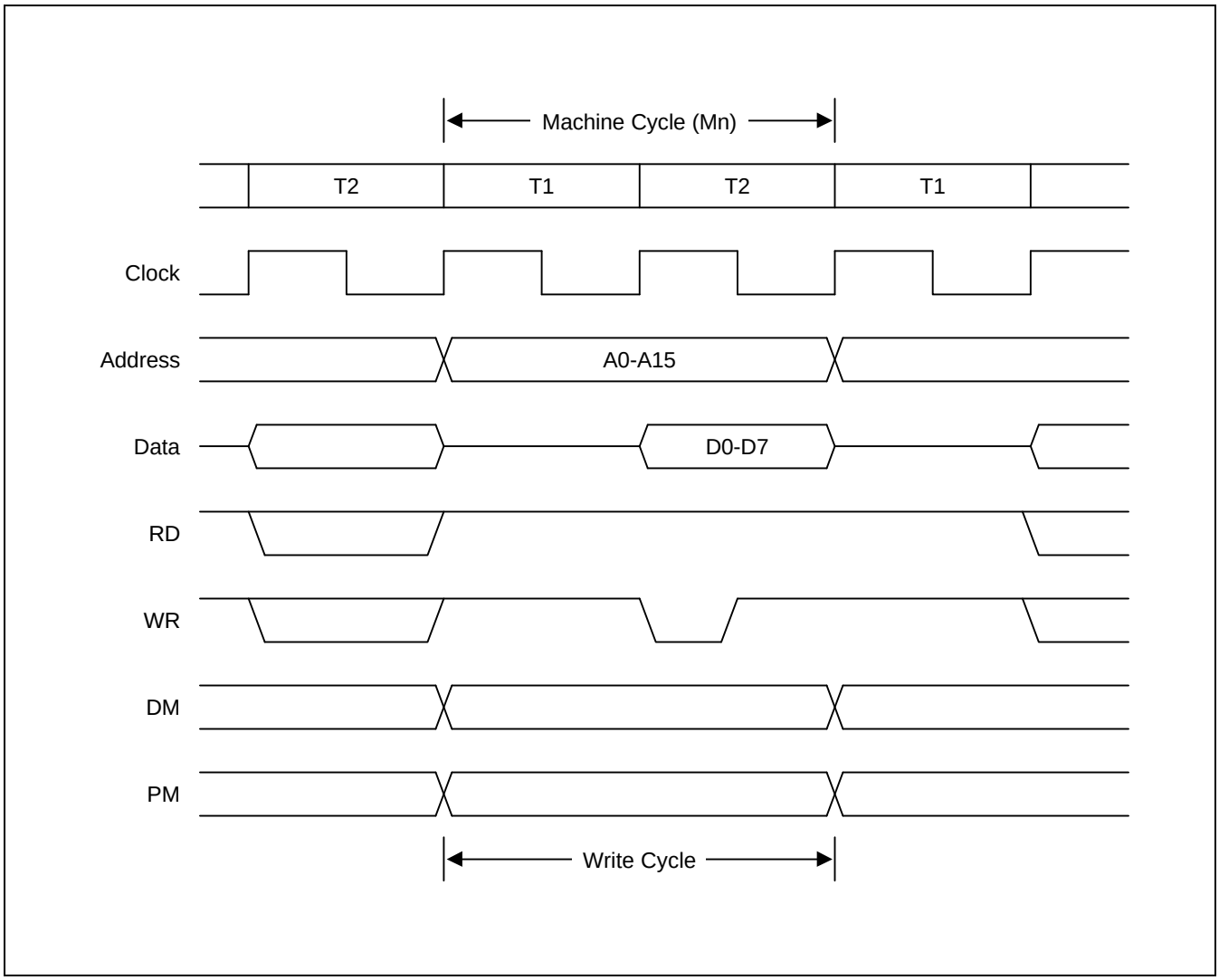

Figure 16-5. External Bus Write Cycle Timing Diagram (Address, and Data Separated)

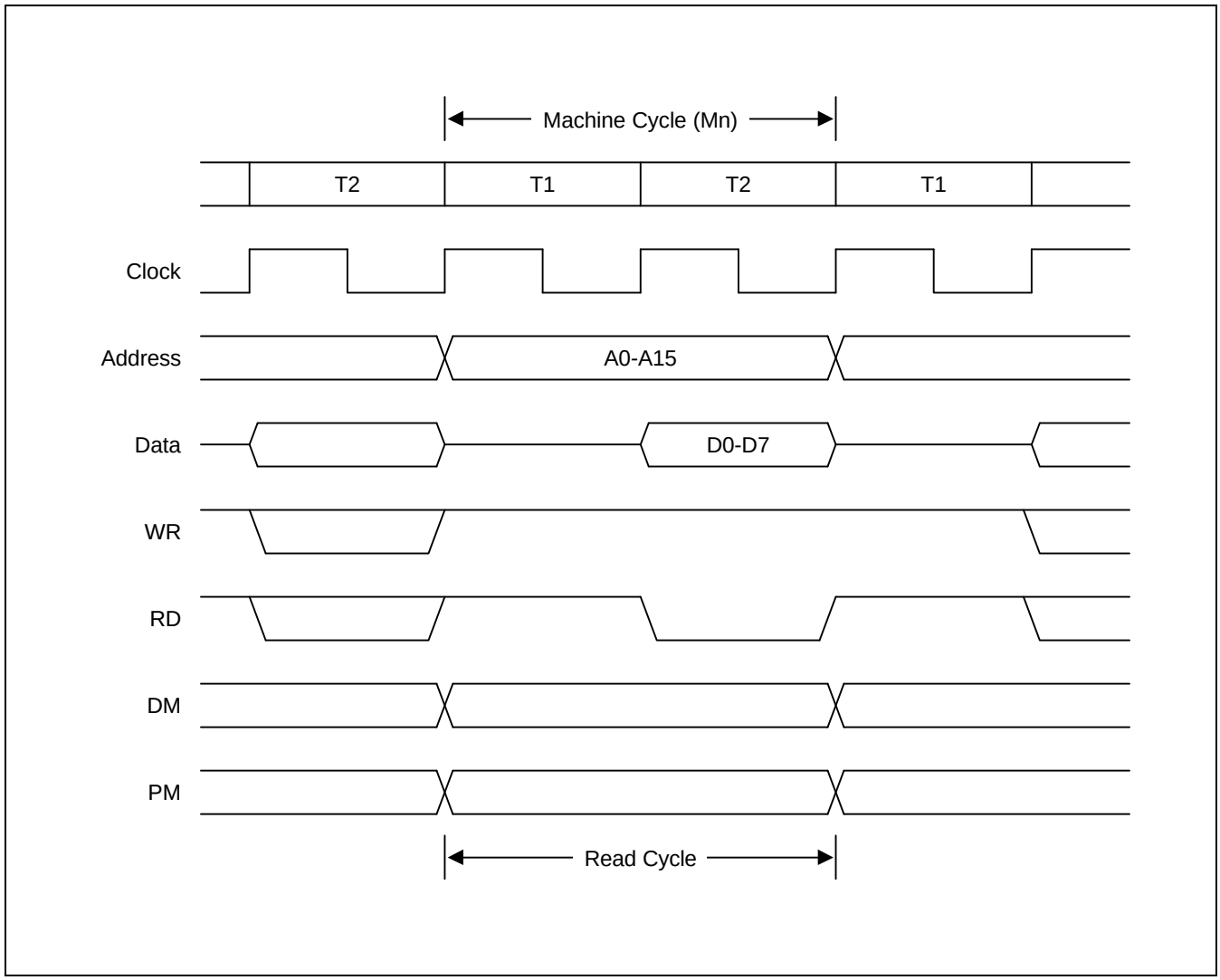

Figure 16-6. External Bus Read Cycle Timing Diagram

Table 16-4. S3C852B External Memory Interface Signal Descriptions

Signal Name	Symbol	Pin	Active Level	Description
Read	RD	14	Low	RD determines the data transfer direction for external memory operations.
Write	WR	15	Low	WR is low when writing to external program memory or data memory locations, and is high for all other operations.
Memory select	DM	13	Low	When it is low, DM selects data memory.
	PM	12	Low	When it is low, PM selects program memory.

NOTE: If bit 7 of the SYM register is high level, and assuming the external memory interface is configured, the RD, PM, WR, and DM signals, as well as address and data signal, will be set to high impedance state. This causes the external interface signals to 'float'.

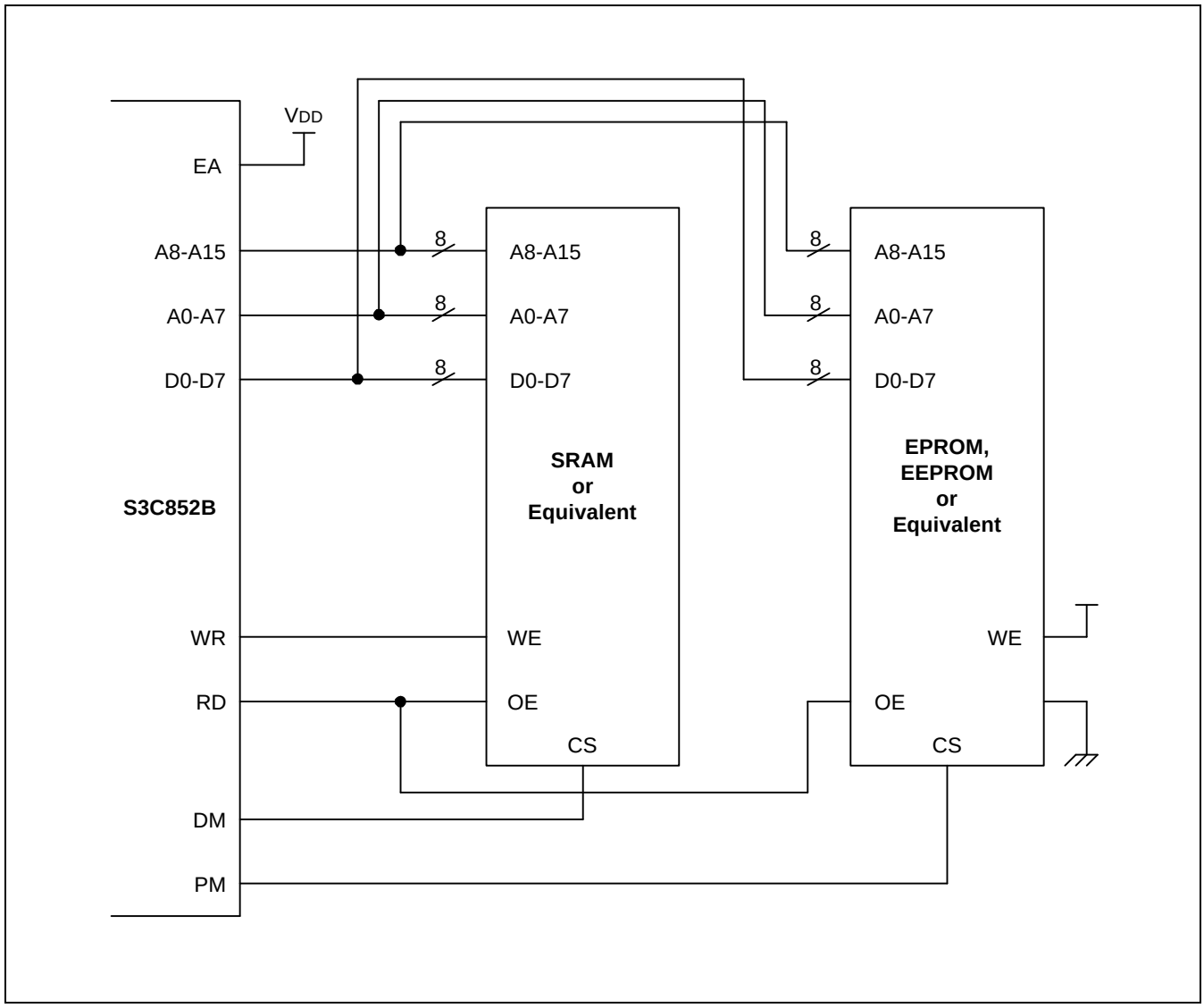

Figure 16-7. External Interface Function Diagram (with SRAM and EPROM or EEPROM)

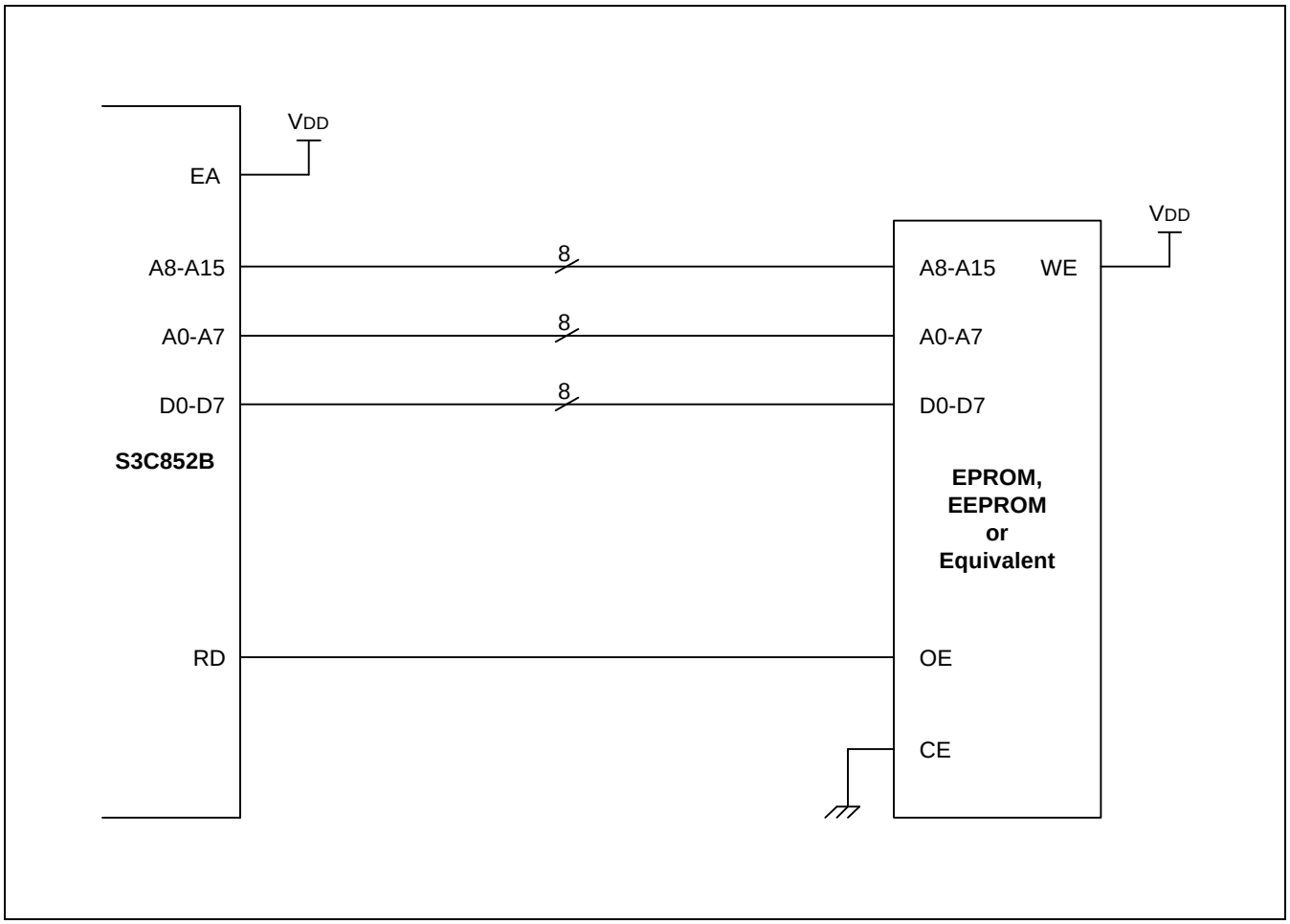

Figure 16-8. External Interface Function Diagram (External ROM Only)

SAM8 INSTRUCTION EXECUTION TIMING DIAGRAMS

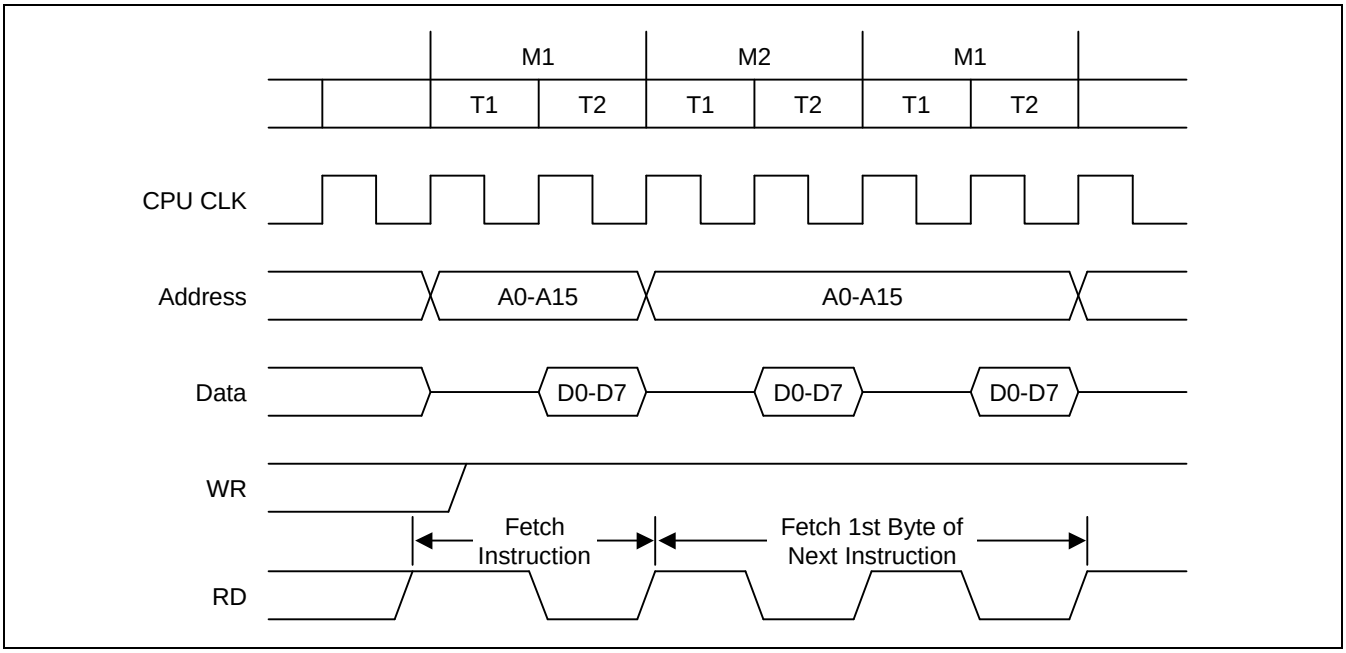

Figure 16-9. External Bus Timing Diagram for 1-Byte Fetch Instructions

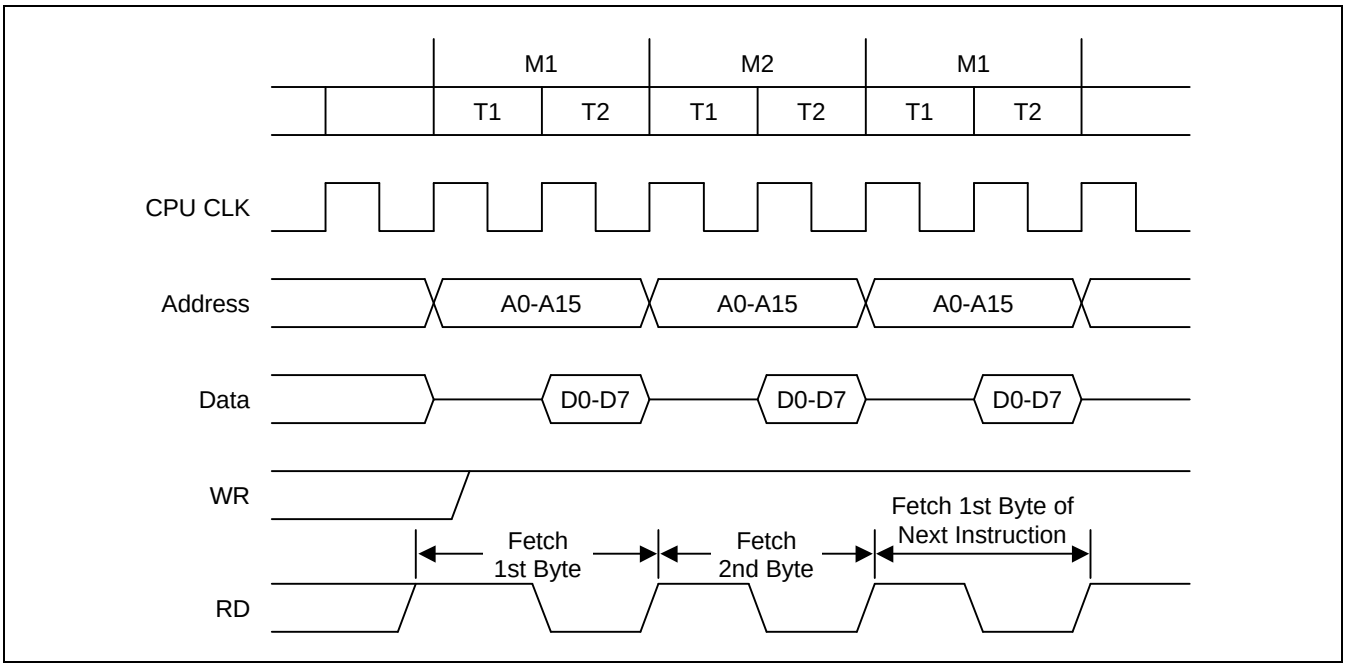

Figure 16-10. External Bus Timing Diagram for 2-Byte Fetch Instructions

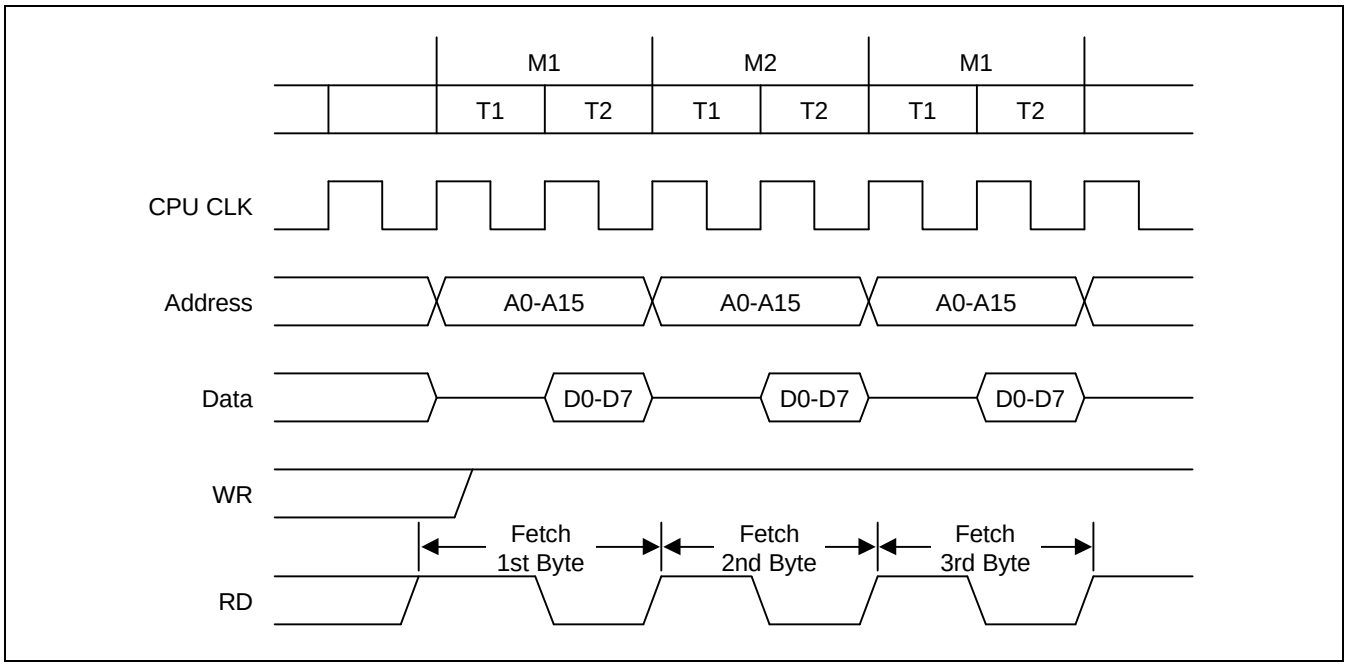

Figure 16-11. External Bus Timing Diagram for 3-Byte Fetch Instructions

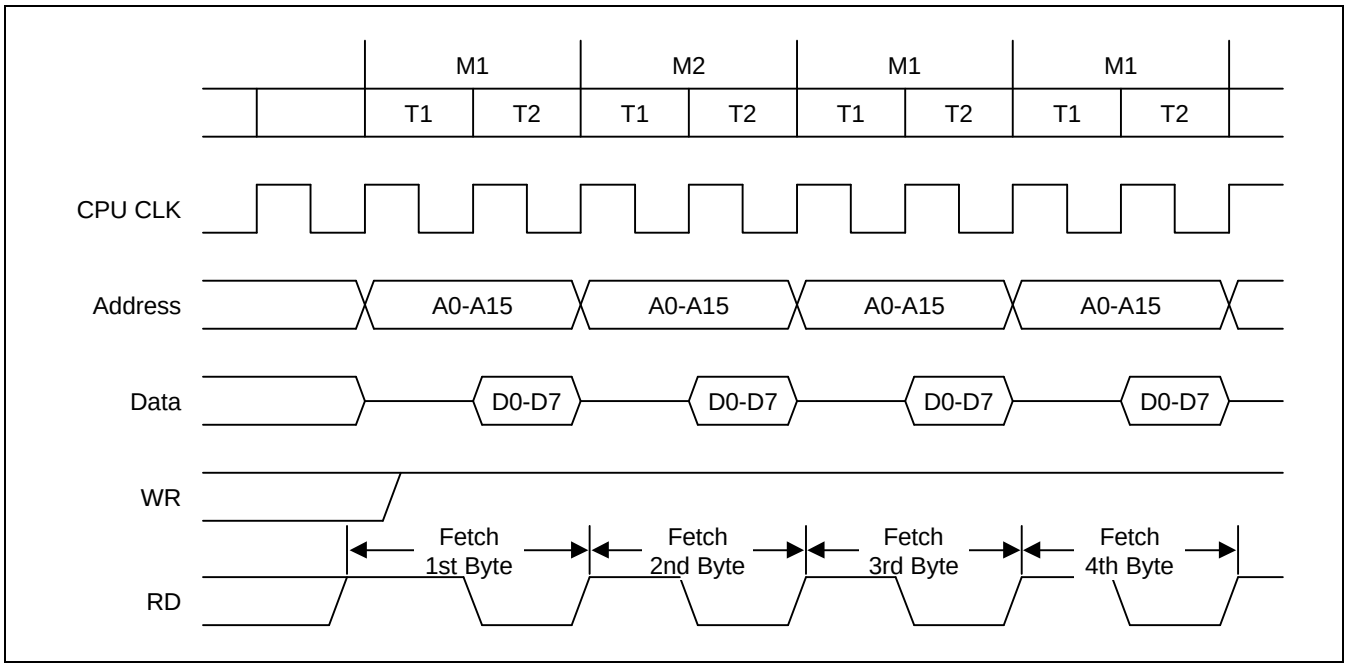

Figure 16-12. External Bus Timing Diagram for 4-Byte Fetch Instructions

17 ELECTRICAL DATA

OVERVIEW

In this chapter, S3C852B electrical characteristics are presented in tables and graphs. The information is arranged in the following order:

— Absolute maximum ratings
— D.C. electrical characteristics
— Data retention supply voltage in Stop mode
— Stop mode release timing when initiated by an external interrupt
— Stop mode release timing when initiated by a Reset
— I/O capacitance
— A.C. electrical characteristics
— Input timing for external interrupts (port 0)
— Input timing for RESET
— Oscillation characteristics
— Oscillation stabilization time
— Phase locked loop characteristics
— Serial I/O Timing Characteristics
— A/D Converter Electrical Characteristics
— Analog Circuit Characteristics and Consumed Current
— Electrical characteristics of CID Block
— CAS timing characteristics
— SDT timing characteristics
— Serial Interface timing characteristics
— Oscillation stabilization time

Table 17-1. Absolute Maximum Ratings

(T_A = 25°C)

Parameter	Symbol	Conditions	Rating	Unit
Supply voltage	V_{DD}	–	– 0.3 to + 7.0	V
Input voltage	V_{IN}	Ports 0, 1, 2, 3, 4, 5, 6, 7, 8, 9 and 10	– 0.3 to V_{DD} + 0.3	V
Output voltage	V_O	All output pins	– 0.3 to V_{DD} + 0.3	V
Output current High	I_{OH}	One I/O pin active	– 18	mA
		All I/O pins active	– 60	
Output current Low	I_{OL}	One I/O pin active	+ 30	mA
		Total pin current for ports 0, 1, and 3–10	+ 100	
		Total pin current for port 2	+ 40	
Operating temperature	T_A	–	0 to + 70	°C
Storage temperature	T_{STG}	–	– 10 to + 100	°C

Table 17-2. D.C. Electrical Characteristics

(T_A = 0°C to + 70°C, V_{DD} = 2.7 V to 5.5 V)

Parameter	Symbol	Conditions	Min	Typ	Max	Unit
Operating Voltage	V_{DD}	fx = 3.579545 MHz (Instruction clock=0.89 MHz)(note)	2.7	–	5.5	V
Input High voltage	V_{IH1}	All input pins except V_{IH2} and V_{IH3}	0.8 V_{DD}	–	V_{DD}	
	V_{IH2}	RESET	0.7 V_{DD}		V_{DD}	
	V_{IH3}	X_{IN}, XT_{IN}	V_{DD} – 0.3		V_{DD}	
Input Low voltage	V_{IL1}	All input pins except V_{IL2} and V_{IL3}	0	–	0.2 V_{DD}	
	V_{IL2}	RESET	0	–	0.3 V_{DD}	
	V_{IL3}	X_{OUT}, XT_{OUT}			0.3	
Output High voltage	V_{OH}	V_{DD} = 4.5 to 6.0 V; I_{OH} = – 1 mA Ports 0 - 6	V_{DD} – 1.0	–	–	V
		I_{OH} = – 100 uA	V_{DD} – 0.5			
Output Low voltage	V_{OL1}	V_{DD} = 4.5 to 6.0 V; I_{OL}= 2 mA, All output pins except V_{OL2}	–	0.4	2.0	
	V_{OL2}	V_{DD} = 4.5 to 6.0 V; I_{OL}= 15 mA, Ports 2		0.4	2.0	
Input High leakage current	I_{LIH1}	V_{IN} = V_{DD}; All input pins except X_{IN}, X_{OUT}, XT_{IN}, and XT_{OUT}	–	–	1	µA
	I_{LIH2}	V_{IN} = V_{DD}; X_{IN}, X_{OUT}, XT_{IN}, and XT_{OUT}			20	
Input Low leakage current	I_{LIL1}	V_{IN} = 0 V; All input pins except RESET, X_{IN}, X_{OUT}, XT_{IN}, and XT_{OUT}	–	–	– 1	
	I_{LIL2}	V_{IN} = 0 V; X_{IN}, X_{OUT}, XT_{IN}, and XT_{OUT}			– 20	
Output High leakage current	I_{LOH}	V_{OUT} = V_{DD} ;All output pins	–	–	1	
Output Low leakage current	I_{LOL}	V_{OUT} = 0 V ;All output pins	–	–	– 1	
Pull-up resistors	R_{L1}	V_{IN}=0 V; T_A=25 °C; V_{DD}=5.0 V Ports 0 – 10	25	47	100	kΩ
		V_{DD}=3.0 V	50	90	150	
	R_{L2}	V_{IN}=0 V; T_A=25 °C; V_{DD}=5.0 V RESET only	150	250	350	
		V_{DD}=3.0 V	300	500	700	

NOTE: Minimum instruction clock.

Table 17-2. D.C. Electrical Characteristics (Continued)

(T_A = 0°C to + 70°C, V_{DD} = 2.7 V to 5.5 V)

Parameter	Symbol	Conditions		Min	Typ	Max	Unit
Supply current (note)	I_{DD1}	V_{DD} = 5.0 V ± 10% Crystal oscillator C1 = C2 = 22pF	3.58MHz	–	4.0	8.0	mA
		V_{DD} = 3.0 V ± 10%	3.58MHz	–	2.0	4.0	
	I_{DD1CID}	V_{DD} = 5.0 V ± 10% Crystal oscillator C1 = C2 = 22pF	3.58MHz	–	8.0	16.0	mA
		V_{DD} = 3.0 V ± 10%	3.58MHz	–	4.0	8.0	
	I_{DD2}	V_{DD} = 5.0 V ± 10% Crystal oscillator C1 = C2 = 22pF	3.58MHz	–	2.5	4.6-	mA
		V_{DD} = 3.0 V ± 10%	3.58MHz	–	0.8	1.6	
	I_{DD3}	V_{DD} = 3.0 V ± 10%, 32.768 kHz C1 = C2 = 22pF		–	20	40	µA
	I_{DD4}	V_{DD} = 3.0 V ± 10%, 32.768 kHz C1 = C2 = 22pF		–	10	20	
	I_{DD5}	Stop mode; V_{DD}=5.0V±10%, OSCCON.2=1		–	0.5	5	
		V_{DD}=3.0V±10%,			0.2	2	

NOTES:

1. Supply current does not include current drawn through internal pull-up resistors, ADC or external output current loads.
2. I_{DD1}, I_{DD2}, I_{DD3} and I_{DD4} include power consumption for subsystem clock oscillation.
3. I_{DD3} is the supply current when CAS signal is receiving
4. Every values in this table is measured when bits 4-3 of the system clock control register (CLKCON.4-.3) is set to 11B.
5. I_{DD5} is current when bit2 of the oscillator control register (OSCCON.2) is set to logic 1.

Table 17-3. Data Retention Supply Voltage in Stop Mode

(T_A = 0 °C to + 70 °C)

Parameter	Symbol	Conditions	Min	Typ	Max	Unit
Data retention supply voltage	V_{DDDR}	–	1.0	–	6.0	V
Data retention supply current	I_{DDDR}	Stop mode, V_{DDDR}=1.0 V	–	–	1	µA
Oscillator stabilization wait time	t_{WAIT}	Released by RESET	–	2^{16}/fx (1)	–	ms
		Released by interrupt	–	(2)	–	

NOTES:
1. fx is the main oscillator frequency.
2. The duration of the oscillation stabilization time (t_{WAIT}) when it is released by an interrupt is determined by the setting in the basic timer control register, BTCON.

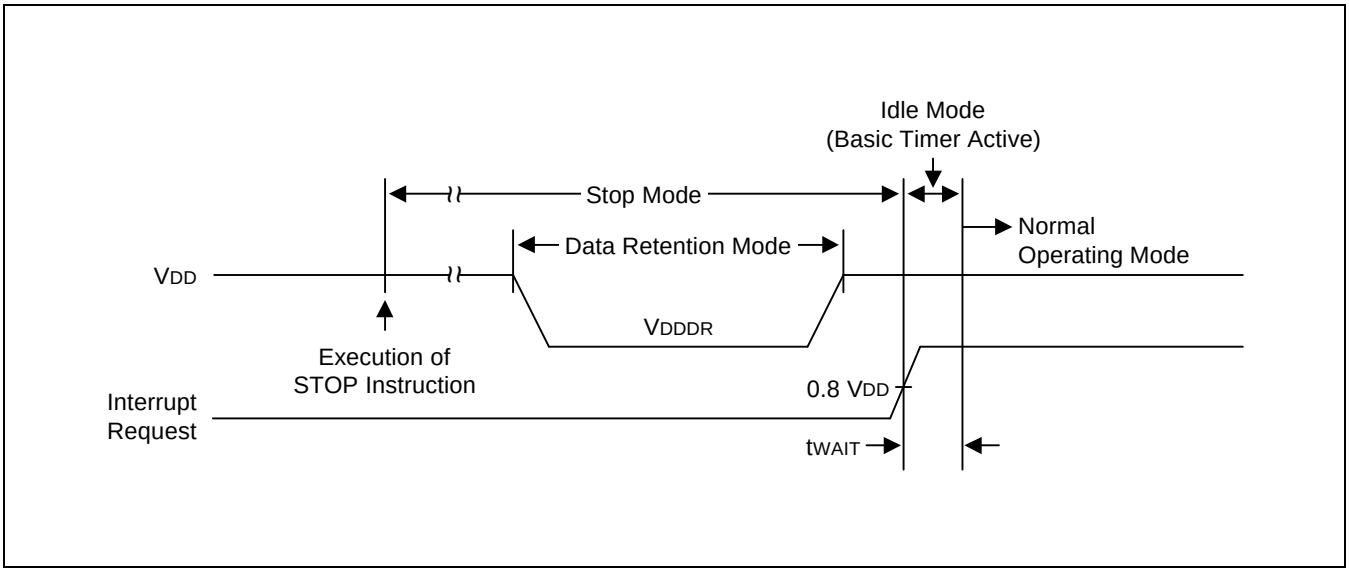

Figure 17-1. Stop Mode Release Timing When Initiated by an External Interrupt

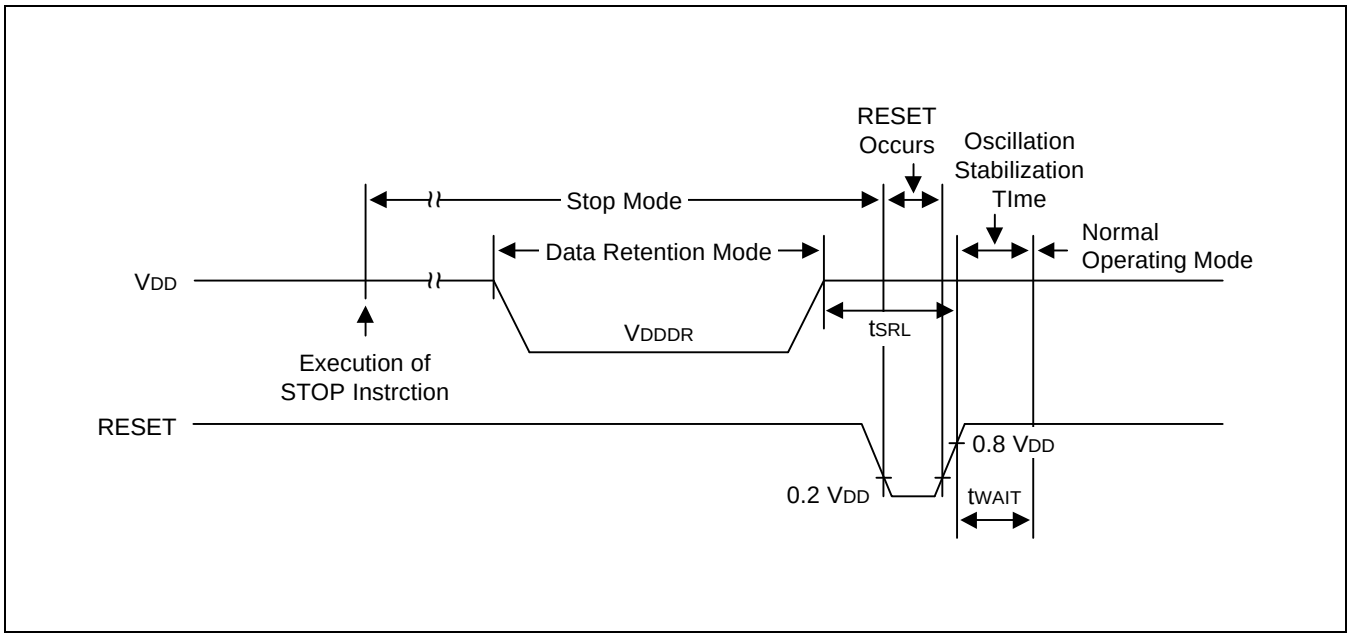

Figure 17-2. Stop Mode Release Timing When Initiated by a RESET

Table 17-4. Input/Output Capacitance

(T_A = 0°C to + 70°C, V_{DD} = 0 V)

Parameter	Symbol	Conditions	Min	Typ	Max	Unit
Input capacitance	C_{IN}	f = 1 MHz; unmeasured pins are connected to V_{SS}	–	–	10	pF
Output capacitance	C_{OUT}					
I/O capacitance	C_{IO}					

Table 17-5. A.C. Electrical Characteristics

(T_A = 0°C to + 70°C)

Parameter	Symbol	Conditions	Min	Typ	Max	Unit
Interrupt input, High, Low width	t_{INTH}, t_{INTL}	P0.1 – P0.7 V_{DD} = 5 V	150	200	–	ns
RESET input Low width	t_{RSL}	Input V_{DD} = 5 V	1000	–	10000	

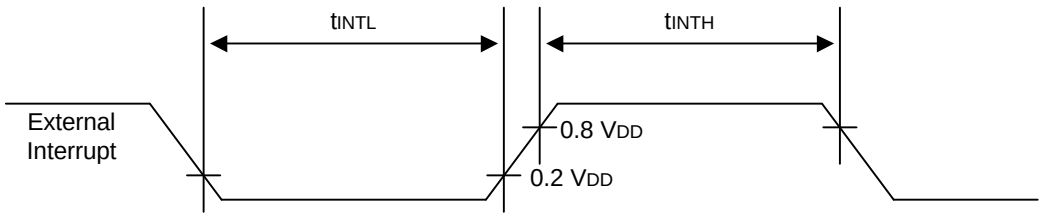

NOTE: The unit tCPU means one CPU clock period.

Figure 17-3. Input Timing for External Interrupts (P0.0–P0.7)

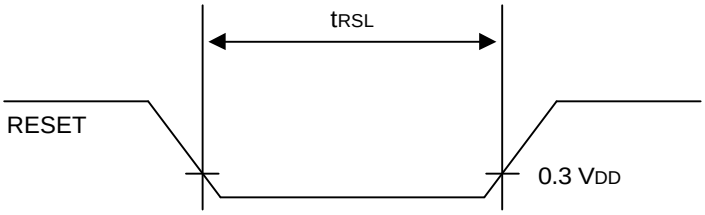

Figure 17-4. Input Timing for RESET

Table 17-6. Main Oscillation Characteristics

(T_A = 0°C to + 70°C, V_{DD} = 2.7 V to 5.5 V)

Oscillator	Clock Circuit	Conditions	Min	Typ	Max	Unit
Crystal Oscillator	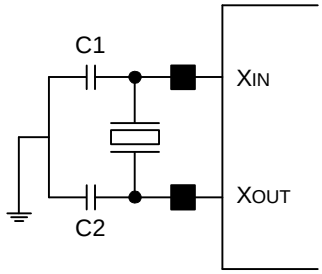	CPU clock oscillation frequency V_{DD} = 2.2 V to 6.0 V	–	3.579545	–	MHz
External clock	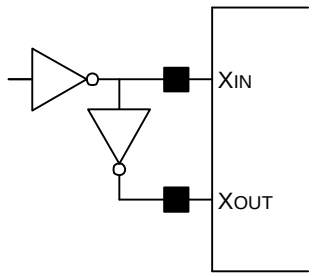	X_{IN} input frequency V_{DD} = 2.2 V to 6.0 V	–	3.579545	–	

Table 17-7. Sub Oscillation Characteristics

(T_A = 0°C to + 70°C, V_{DD} = 2.7 V to 5.5 V)

Oscillator	Clock Circuit	Conditions	Min	Typ	Max	Unit
Crystal Oscillator	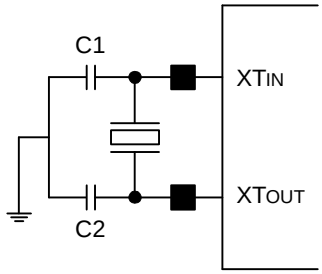	CPU clock oscillation frequency	32	32.768	35	kHz
External clock	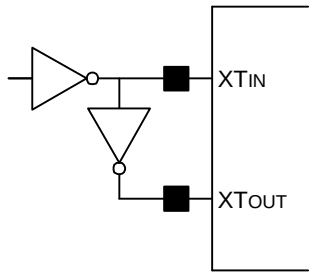	XT_{IN} input frequency	32	–	100	kHz

Table 17-8. Main Oscillation Stabilization Time

(T_A = 0°C to + 70°C)

Oscillator	Test Condition	Min	Typ	Max	Unit
Crystal	V_{DD} = 4.5 V to 6.0 V	–	–	10	ms
Oscillator	V_{DD} = 2.0 V to 4.5 V	–	–	30	
Ceramic Oscillator	Oscillation stabilization occurs when V_{DD} is equal to the minimum oscillator voltage range.	–	–	4	ms
External clock	X_{IN} input High and Low width (t_{XH}, t_{XL})	62.0	–	1250	ns

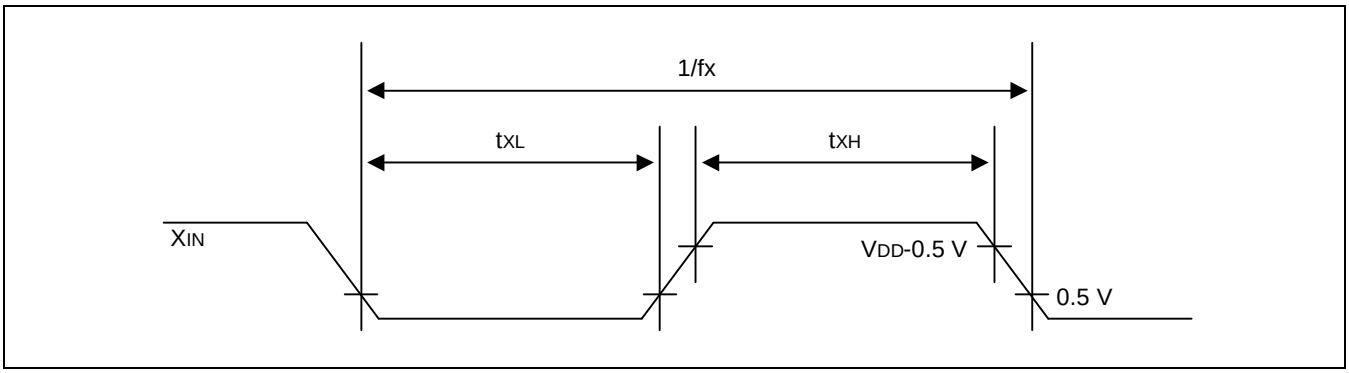

Figure 17-5. Clock Timing Measurement at X_{IN}

Table 17-9. Sub Oscillation Stabilization Time

(T_A = 0°C to + 70°C, V_{DD} = 3.0 V ± 10 %)

Oscillator	Test Condition	Min	Typ	Max	Unit
Crystal	V_{DD} = 4.5 V to 6.0 V	–	1.0	2	s
	V_{DD} = 2.0 V to 4.5 V	–	–	10	
External clock	X_{IN} input High and Low width (t_{XH}, t_{XL})	5	–	15	µs

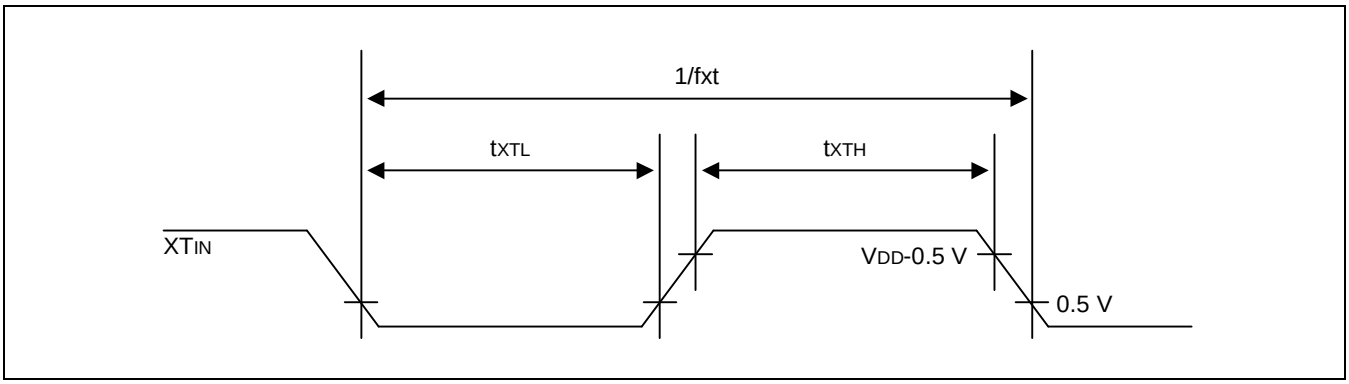

Figure 17-6. Clock Timing Measurement at XT_{IN}

Table 17-10. Phase Locked Loop Characteristics

(T_A = 0°C to + 70°C, V_{DD} = 2.7 V to 5.5V, X_{TIN} = 32.768kHz ± 0.05%, X_{IN} = 3.579545MHz, C_{PLLC} = 0.1µF)

Parameter	Test Condition	Min	Typ	Max	Unit
Operating Voltage	T_A = 0°C to + 70°	4.5	–	5.5	V
Output Frequency	V_{DD} = 2.7 V to 5.5 V Main clock (fx) generation	3.579	3.579545	3.58	
	Main clock doubling (fx*2)	7.158	7.15909	7.160	
Stabilization Time	V_{DD} = 2.7 V to 5.5 V Main clock (fx) generation	–	–	0.5	S

Table 17-11. Serial I/O Timing Characteristics

(T_A = 0°C to + 70°C, V_{DD} = 2.7 V to 5.5 V)

Parameter	Symbol	Conditions	Min	Typ	Max	Unit
SCK Cycle Time	T_{CKY}	External SCK source	1000	–	–	ns
		Internal SCK source	1000			
SCK High, Low Width	t_{KH}, t_{KL}	External SCK source	500	–	–	
		Internal SCK source	$t_{KCY}/2 - 50$			
SI Setup Time to SCK Low	T_{SIK}	External SCK source	250	–	–	
		Internal SCK source	250			
SI Hold Time to SCK High	T_{KSI}	External SCK source	400	–	–	
		Internal SCK source	400			
Output Delay for SCK to SO	T_{KSO}	External SCK source	–	–	300	
		Internal SCK source			250	

NOTE: "SCK" means serial I/O clock frequency, "SI" means serial data input, and "SO" means serial data output.

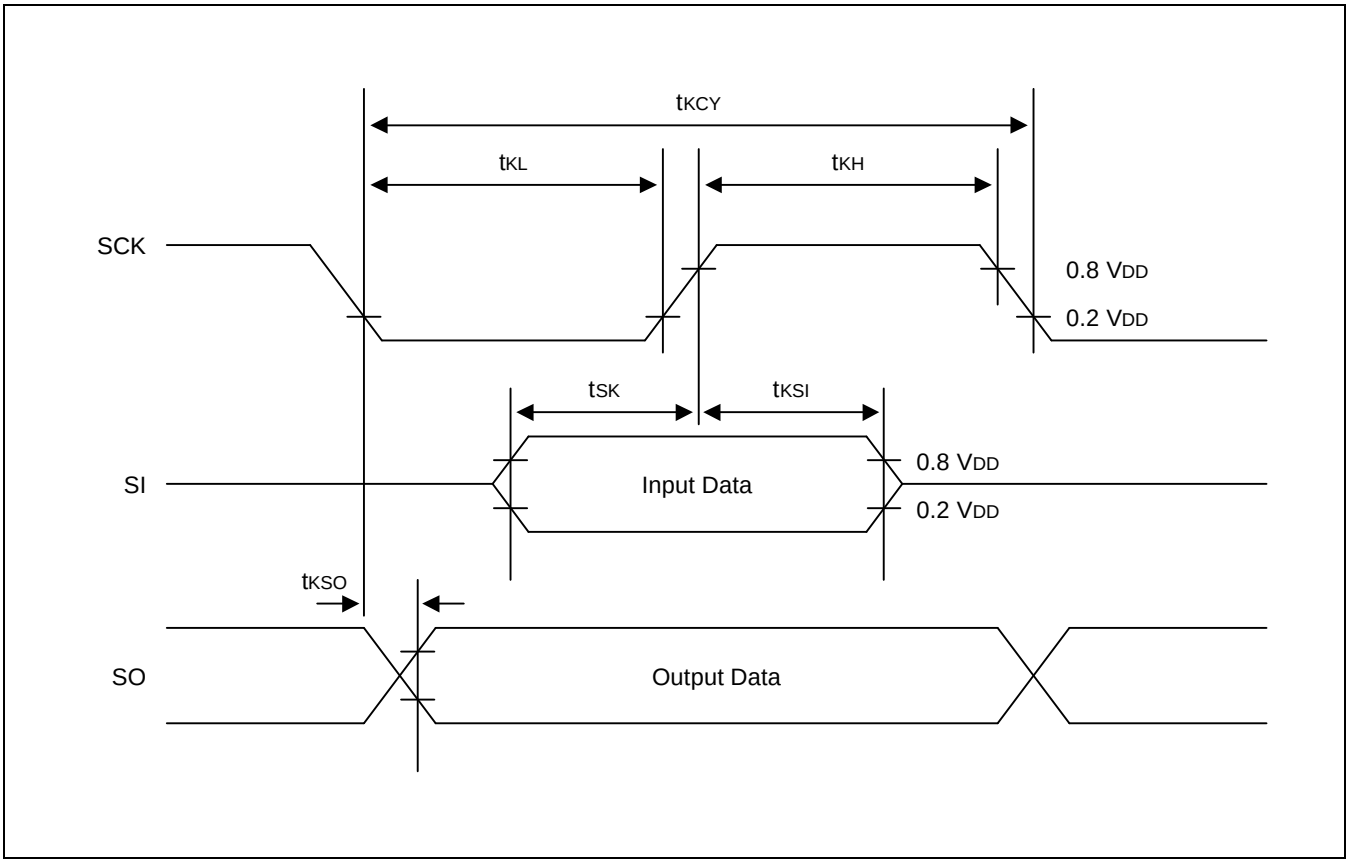

Figure 17-7. Serial Data Transfer Timing

Table 17-12. A/D Converter Electrical Characteristics

(T_A = 0 °C to + 70 °C, V_{DD} = 2.7 V to 5.5 V, V_{SS} = 0 V)

Parameter	Symbol	Conditions	Min	Typ	Max	Unit
Resolution			10	10	10	bit
Absolute accuracy (1)		V_{DD} = 5.12 V fx = 8 MHz AV_{REF} = (10/10)V_{DD} AV_{SS} = 0 V	–	–	| 3 |	LSB
Conversion time (2)	t_{CON}	Conversion clock = fx (3)	50/fx	–	–	uS
Analog reference voltage	AV_{REF}	–	V_{DD} - 0.1	V_{DD}	V_{DD} + 0.1	V
Analog ground	AV_{SS}	–	V_{SS}	–	–	V
Analog input voltage	V_{IAN}	–	AV_{SS}	–	AV_{REF}	V
Analog input impedance	R_{AN}	–	2	–	–	MΩ

NOTES:

1. Excluding quantization error, absolute accuracy equals ± 1/2 LSB.
2. 'Conversion time' is the time required from the moment a conversion operation starts until it ends.
3. The conversion clock is selected by bits 2-1 of A/D converter control register, ADCON.2-.1.

Table 17-13. Electrical Characteristics of CID Block (Receiver & Detectors)

(T_A = 0 °C to + 70 °C, V_{DD} = 5.0 V ± 5 %, X_{IN} = 3.579545MHz ± 0.1%)

Symbol	Parameter	Min	Typ	Max	Unit
Voltage reference					
V_{REF}	Reference voltage output		2.25		V
CAS detector					
THac	Input accept threshold (in 600 Ω load)	-38			dBm
Pic	Input signal power (in 600 Ω load)	-37		0	dBm
flc	Low tone frequency		2130		Hz
fhc	High tone frequency		2750		Hz
Δfmaxc	maximum frequency deviation	-0.6		+0.6	%
T_{WC}	Twist	-6		6	dB
FSK receiver					
Pif	Input signal power (in 600 Ω load)	-42		0	dBm
fD	data transmission rate frequency	1188	1200	1212	Baud
fmb	mark frequency (Bell202)	1188	1200	1212	Hz
fsb	space frequency (Bell202)	2178	2200	2222	Hz
fmv	mark frequency (CCITT/V23)		1300		Hz
fsv	space frequency (CCITT/V23)		2100		Hz
Twf	twist	-10		10	dB
S/N0	signal to noise ratio (0Hz – 200Hz)	-25			dB
S/N1	signal to noise ratio (200Hz – 3.2kHz)	6			dB
S/N3	signal to noise ratio (3.2kHz – 15kHz)	-25			dB
SDT detector					
fls	Low tone frequency		350		Hz
fhs	High tone frequency		440		Hz
Tws	Twist	-6		+6	dB
THap	Input accept threshold (in 600 Ω load)	-38		-5	dBm

Table 17-14. CAS Timing Characteristics

(T_A = 0 °C + 70 °C, V_{DD} = 2.7 V to 5.5 V, X_{IN} = 3.579545MHz ± 0.1%)

Parameter	Symbol	Min	Typ	Max	Unit
CAS detection time from CAS start	T_{DETC}		67		ms
Detection off time from CAS end	T_{OFFC}		30		ms
CAS detection time width	T_{WIDTHC}	8			ms

Table 17-15. Electrical Characteristics of CID Block (Tone Generator)

(T_A = 25°C, V_{DD} = 5.0 V ± 5% (Max), 3.3V± 5% (Typ), XIN = 3.579545MHz ± 0.1%
High & Low Tone Gain = 10H, R11 = 9kΩ, C8 = 2.2nF, terminal impedence = 600Ω)

Symbol	Parameter	Min	Typ	Max	Unit
DTMF Generation					
Pod	output signal power (for high tone)	–	-4.3	0.4	dBm
Δfmaxd_g	maximum frequency deviation	-0.1		+0.1	%
S/Nd	signal to noise ratio (0 – 6kHz)	-32			dBV
FSK Generation					
Pof	output signal power (for high tone)	–	-4.3	0.2	dBm
Δfmaxf_g	maximum frequency deviation	-0.1		+0.1	%
S/Nf	signal to noise ratio (0 – 6kHz)	-45			dBV
CAS Generation					
Poc	output signal power (for high tone)	–	-5.3	-0.2	dBm
Δfmaxc_g	maximum frequency deviation	-0.1		+0.1	%
S/Nc	signal to noise ratio (0 – 6kHz)	-34			dBV

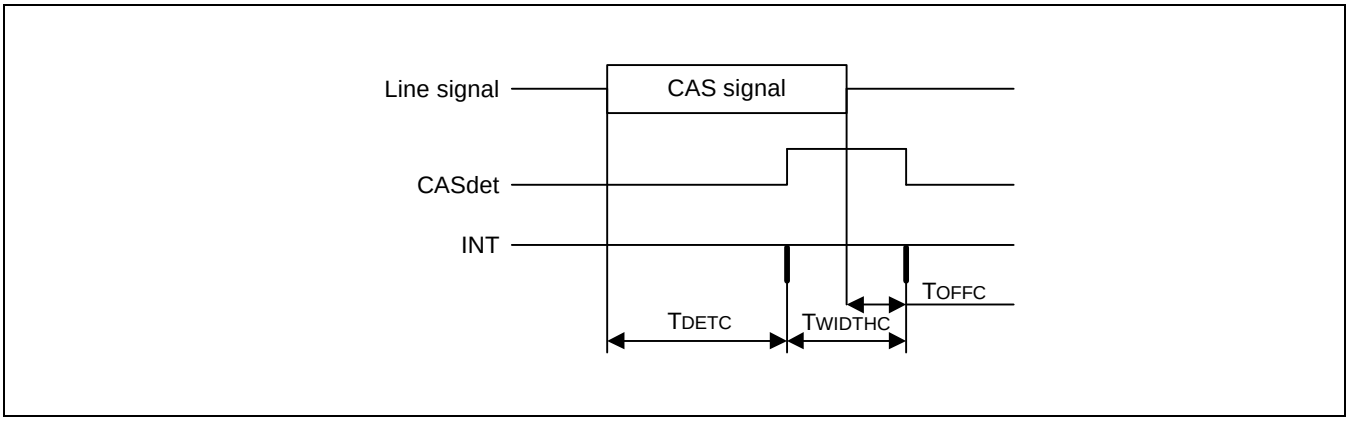

Figure 17-8. Waveform for CAS Timing Characteristics

Table 17-16. SDT Timing Characteristics

(T_A = 0 °C + 70 °C, V_{DD} = 2.7 V to 5.5 V X_{IN} = 3.579545MHz ± 0.1%)

Parameter	Symbol	Min	Typ	Max	Unit
SDT detection time from SDT start	T_{DETS}		60		ms
Detection off time from SDT end	T_{OFFC}		30		ms

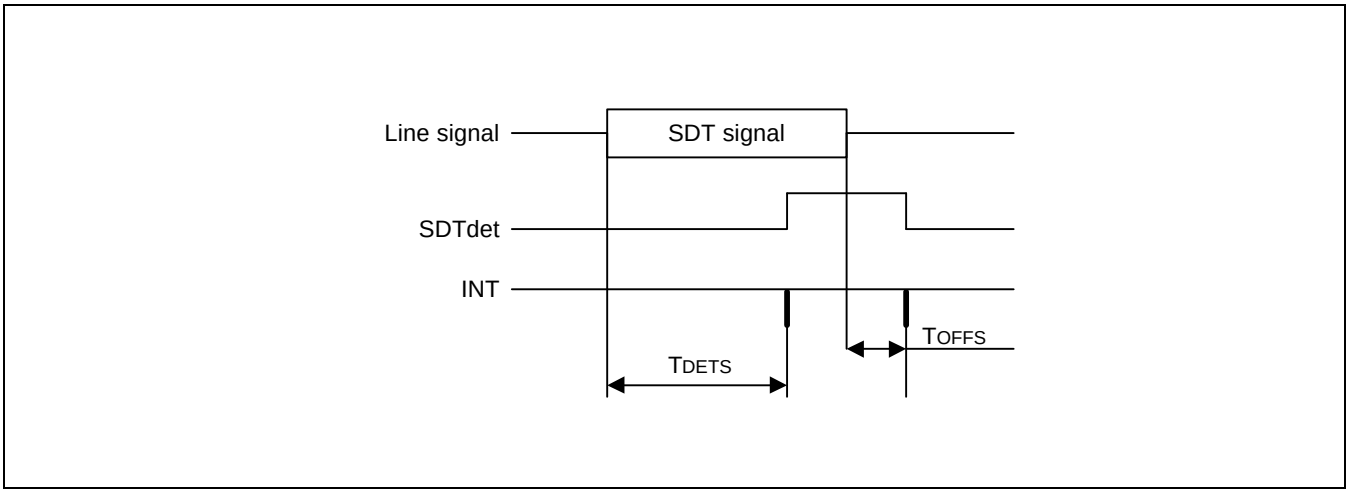

Figure 17-9. Waveform for SDT Timing Characteristics

NOTES

18 MECHANICAL DATA

OVERVIEW

The S3C852B microcontroller is currently available in a 100-pin QFP package.

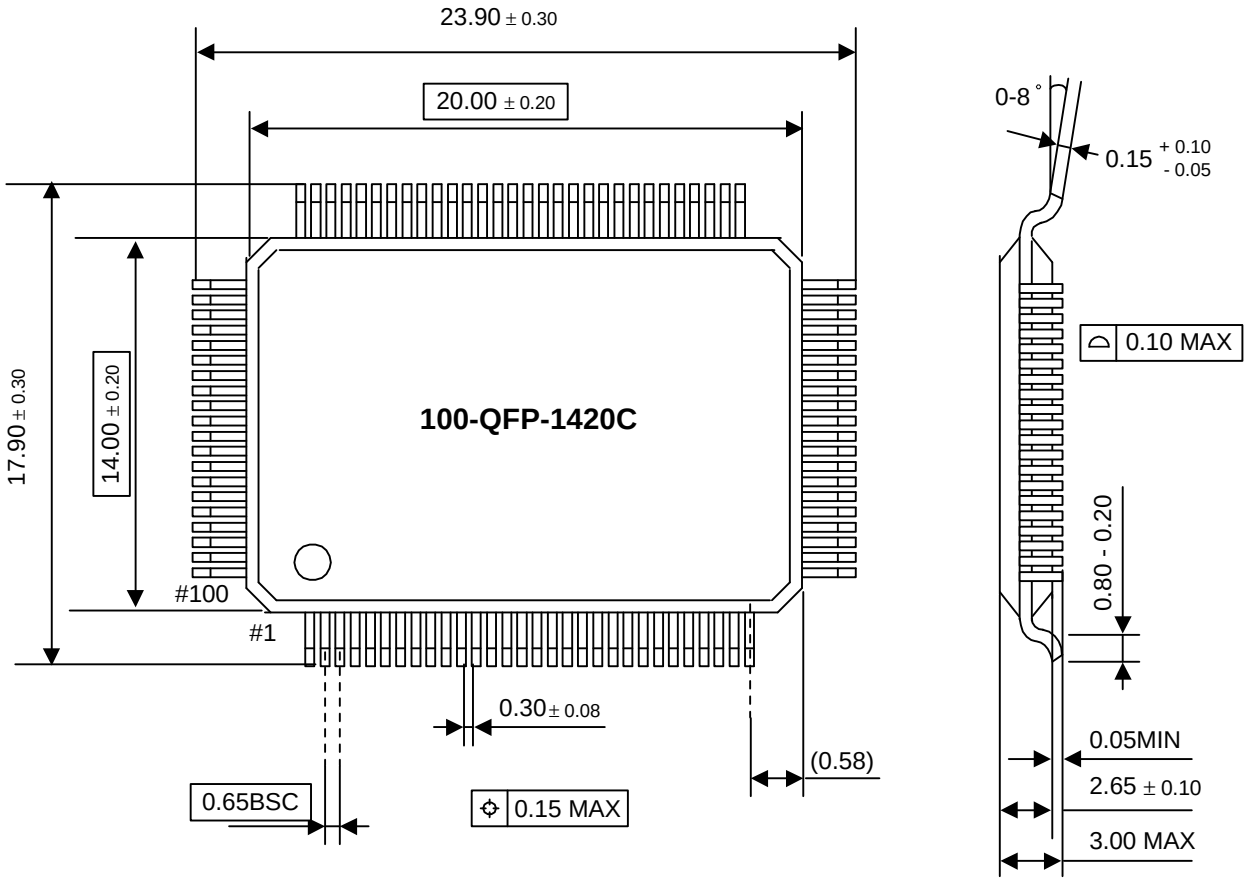

NOTE: Dimensions are in millimeters.

Figure 18-1. 100-Pin QFP Package Mechanical Data

19 S3P852B OTP

OVERVIEW

The S3P852B single-chip CMOS microcontroller is the OTP (One Time Programmable) version of the S3C852B microcontroller. It has an on-chip OTP ROM instead of a masked ROM. The EPROM is accessed by serial data format.

The S3P852B is fully compatible with the S3C852B, both in function in D.C. electrical characteristics, bonding information and in pin configuration. Because of its simple programming requirements, the S3P852B is ideal as an evaluation chip for the S3C852B.

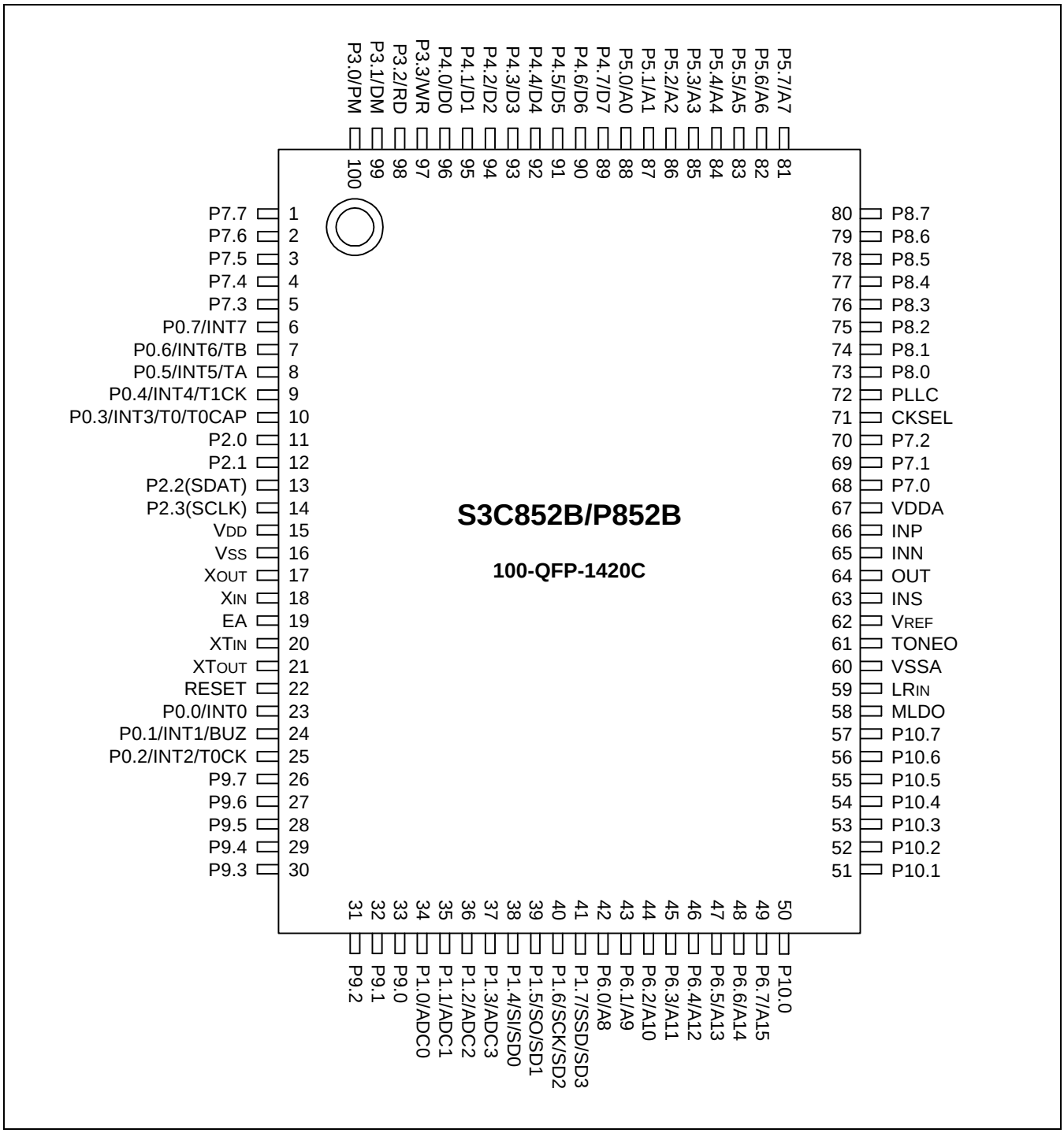

Figure 19-1. S3P852B Pin Assignments (100-Pin QFP Package)

Table 19-1. Descriptions of Pins Used to Read/Write the EPROM

Main Chip	During Programming			
Pin Name	Pin Name	Pin No.	I/O	Function
P2.2	SDAT	13	I/O	Serial data pin. Output port when reading and input port when writing. Can be assigned as a Input/push-pull output port.
P2.3	SCLK	14	I	Serial clock pin. Input only pin.
EA	V_{PP}	19	I	Power supply pin for EPROM cell writing (indicates that OTP enters into the writing mode). When 12.5 V is applied, OTP is in writing mode and when 5 V is aplied, OTP is in reading mode. (Option)
RESET	RESET	22	I	Chip Initialization
V_{DD}/V_{SS}	V_{DD}/V_{SS}	15/16	–	Logic power supply pin. V_{DD} should be tied to +5 V during programming.

Table 19-2. Comparison of S3P852B and S3C852B Features

Characteristic	S3P852B	S3C852B
Program Memory	64-Kbyte EPROM	64-Kbyte mask ROM
Operating Voltage (V_{DD})	2.7 V to 5.5 V	2.7 V to 5.5 V
OTP Programming Mode	V_{DD} = 5 V, V_{PP} (EA) = 12.5 V	
Pin Configuration	100 QFP	100 QFP
EPROM Programmability	User Program 1 time	Programmed at the factory

OPERATING MODE CHARACTERISTICS

When 12.5 V is supplied to the V_{PP} (EA) pin of the S3P852B, the EPROM programming mode is entered.

NOTES

S3C8- SERIES MASK ROM ORDER FORM

Product description:

Device Number: S3C852B_ ___ _- _____(write down the ROM code number)
Product Order Form: ☐ Package ☐ Pellet ☐ Wafer Package Type: _____

Package Marking (Check One):

☐ Standard ☐ Custom A (Max 10 chars) ☐ Custom B (Max 10 chars each line)

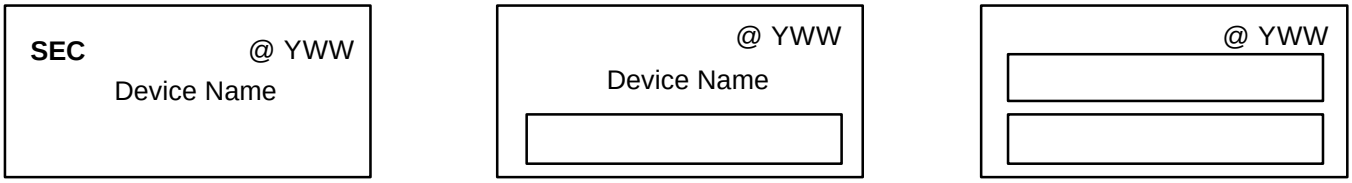

@ : Assembly site code, Y : Last number of assembly year, WW : Week of assembly

Delivery Dates and Quantities:

Deliverable	Required Delivery Date	Quantity	Comments
ROM code	–	Not applicable	See ROM Selection Form
Customer sample			
Risk order			See Risk Order Sheet

Please answer the following questions:

☞ **For what kind of product will you be using this order?**

☐ New model ☐ Upgrade of an existing model
☐ Replacement of an existing model ☐ Others

If you are replacing an existing model, please indicate the former product name
( )

☞ **What are the main reasons you decided to use a Samsung microcontroller in your product?**

Please check all that apply.

☐ Price ☐ Product quality ☐ Features and functions
☐ Development system ☐ Technical support ☐ Delivery on time
☐ Used same MCU before ☐ Quality of documentation ☐ Samsung reputation

Mask Charge (US$ / Won): _____

Customer Information:

Company Name: _____ Telephone number _____

Signatures: _____ _____
(Person placing the order) (Technical Manager)

(For duplicate copies of this form, and for additional ordering information, please contact your local Samsung sales representative. Samsung sales offices are listed on the back cover of this book.)

S3C8- SERIES
REQUEST FOR PRODUCTION AT CUSTOMER RISK

Customer Information:

Company Name: _____

Department: _____

Telephone Number: _____ Fax: _____

Date: _____

Risk Order Information:

Device Number: S3C852B___- _____ (write down the ROM code number)

Package: Number of Pins: _____ Package Type: _____

Intended Application: _____

Product Model Number: _____

Customer Risk Order Agreement:

We hereby request SEC to produce the above named product in the quantity stated below. We believe our risk order product to be in full compliance with all SEC production specifications and, to this extent, agree to assume responsibility for any and all production risks involved.

Order Quantity and Delivery Schedule:

Risk Order Quantity: _____ PCS

Delivery Schedule:

Delivery Date (s)	Quantity	Comments

Signatures: _____ _____

(Person Placing the Risk Order) (SEC Sales Representative)

(For duplicate copies of this form, and for additional ordering information, please contact your local Samsung sales representative. Samsung sales offices are listed on the back cover of this book.)

S3C852B MASK OPTION SELECTION FORM

Device Number: S3C852B___-_____(write down the ROM code number)

Attachment (Check one): ☐ Diskette ☐ PROM

Customer Checksum: _____

Company Name: _____

Signature (Engineer): _____

Please answer the following questions:

☞ **Application** (Product Model ID: _____)

☐ Audio	☐ Video	☐ Telecom
☐ LCD Databank	☐ Caller ID	☐ LCD Game
☐ Industrials	☐ Home Appliance	☐ Office Automation
☐ Remocon	☐ Other	

Please describe in detail its application

(For duplicate copies of this form, and for additional ordering information, please contact your local Samsung sales representative. Samsung sales offices are listed on the back cover of this book.)

S3P8- SERIES OTP MCU
FACTORY WRITING ORDER FORM (1/2)

Product Description:

Device Number: S3P852B___-_____(write down the ROM code number)

Product Order Form: ☐ Package ☐ Pellet ☐ Wafer

If the product order form is package: Package Type: _____

Package Marking (Check One):

☐ Standard ☐ Custom A (Max 10 chars) ☐ Custom B (Max 10 chars each line)

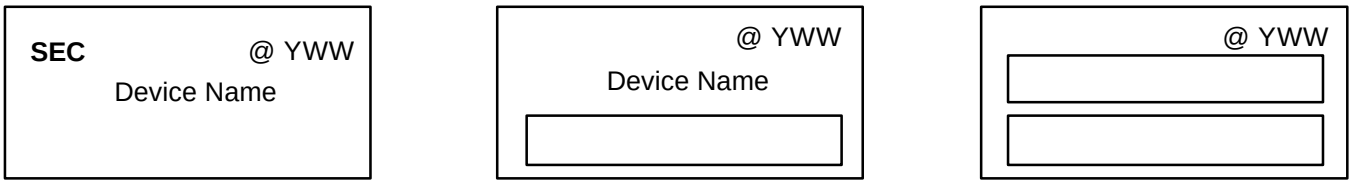

@ : Assembly site code, Y : Last number of assembly year, WW : Week of assembly

Delivery Dates and Quantity:

ROM Code Release Date	Required Delivery Date of Device	Quantity

Please answer the following questions:

☞ **What is the purpose of this order?**

☐ New product development ☐ Upgrade of an existing product

☐ Replacement of an existing microcontroller ☐ Others

If you are replacing an existing microcontroller, please indicate the former microcontroller name

( )

☞ **What are the main reasons you decided to use a Samsung microcontroller in your product? Please check all that apply.**

☐ Price ☐ Product quality ☐ Features and functions

☐ Development system ☐ Technical support ☐ Delivery on time

☐ Used same MCU before ☐ Quality of documentation ☐ Samsung reputation

Customer Information:

Company Name: _____ Telephone number _____

Signatures: _____ _____

(Person placing the order) (Technical Manager)

(For duplicate copies of this form, and for additional ordering information, please contact your local Samsung sales representative. Samsung sales offices are listed on the back cover of this book.)

S3P852B OTP MCU
FACTORY WRITING ORDER FORM (2/2)

Device Number: S3P852B ___-_____ (write down the ROM code number)

Customer Checksums: _____

Company Name: _____

Signature (Engineer): _____

Read Protection [1]: ☐ **Yes** ☐ **No**

Please answer the following questions:

☞ **Are you going to continue ordering this device?**

☐ Yes ☐ No

If so, how much will you be ordering? _____pcs

☞ **Application** (Product Model ID: _____)

☐ Audio	☐ Video	☐ Telecom
☐ LCD Databank	☐ Caller ID	☐ LCD Game
☐ Industrials	☐ Home Appliance	☐ Office Automation
☐ Remocon	☐ Other	

Please describe in detail its application

_____

NOTES

1. Once you choose a read protection, you cannot read again the programming code from the EPROM.
2. OTP MCU Writing will be executed in our manufacturing site.
3. The writing program is completely verified by a customer. Samsung does not take on any responsibility for errors occurred from the writing program.

(For duplicate copies of this form, and for additional ordering information, please contact your local Samsung sales representative. Samsung sales offices are listed on the back cover of this book.)