1 PRODUCT OVERVIEW

OVERVIEW

The S3C72N2/C72N4 single-chip CMOS microcontroller has been designed for high performance using Samsung's newest 4-bit CPU core, SAM47 (Samsung Arrangeable Microcontrollers).

With features such as, LCD direct drive capability, 8-bit timer/counter, and watch timer, the S3C72N2/C72N4 offers an excellent design solution for a wide variety of applications that require LCD functions.

Up to 16 pins of the 64-pin QFP package, it can be dedicated to I/O. Four vectored interrupts provide fast response to internal and external events. In addition, the S3C72N2/C72N4 's advanced CMOS technology provides for low power consumption and a wide operating voltage range.

OTP

The S3C72N2/C72N4 microcontroller is also available in OTP (One Time Programmable) version, S3P72N4 . The S3P72N4 microcontroller has an on-chip 4-Kbyte one-time-programmable EPROM instead of masked ROM. The S3P72N4 is comparable to S3C72N2/C72N4, both in function and in pin configuration.

FEATURES

Memory

— 288 × 4-bit RAM
— 2048 × 8-bit ROM (S3C72N2)
— 4096 × 8-bit ROM (S3C72N4)

I/O Pins

— Input only: 4 pins
— I/O: 12 pins
— Output: 8 pins sharing with segment driver outputs

LCD Controller/Driver

— Maximum 16-digit LCD direct drive capability
— 32 segment, 4 common pins
— Display modes: Static, 1/2 duty (1/2 bias)
1/3 duty (1/2 or 1/3 bias), 1/4 duty (1/3 bias)

8-Bit Basic Timer

— Programmable interval timer
— Watchdog timer

8-Bit Timer/Counter

— Programmable 8-bit timer
— External event counter
— Arbitrary clock frequency output

Watch Timer

— Real-time and interval time measurement
— Four frequency outputs to BUZ pin
— Clock source generation for LCD

Bit Sequential Carrier

— Support 16-bit serial data transfer in arbitrary format

Interrupts

— Two internal vectored interrupts
— Two external vectored interrupts
— Two quasi-interrupts

Memory-Mapped I/O Structure

— Data memory bank 15

Two Power-Down Modes

— Idle mode (only CPU clock stops)
— Stop mode (main or sub system oscillation stops)

Oscillation Sources

— Crystal, ceramic, or RC for main system clock
— Crystal or external oscillator for subsystem clock
— Main system clock frequency: 4.19 MHz (typical)
— Subsystem clock frequency: 32.768 kHz
— CPU clock divider circuit (by 4, 8, or 64)

Instruction Execution Times

— 0.95, 1.91, 15.3 µs at 4.19 MHz (main)
— 122 µs at 32.768 kHz (subsystem)

Operating Temperature

— – 40 °C to 85 °C

Operating Voltage Range

— 2.0 V to 5.5 V at 4.19 MHz
— 1.8 V to 5.5 V at 3 MHz

Package Type

— 64-pin QFP

BLOCK DIAGRAM

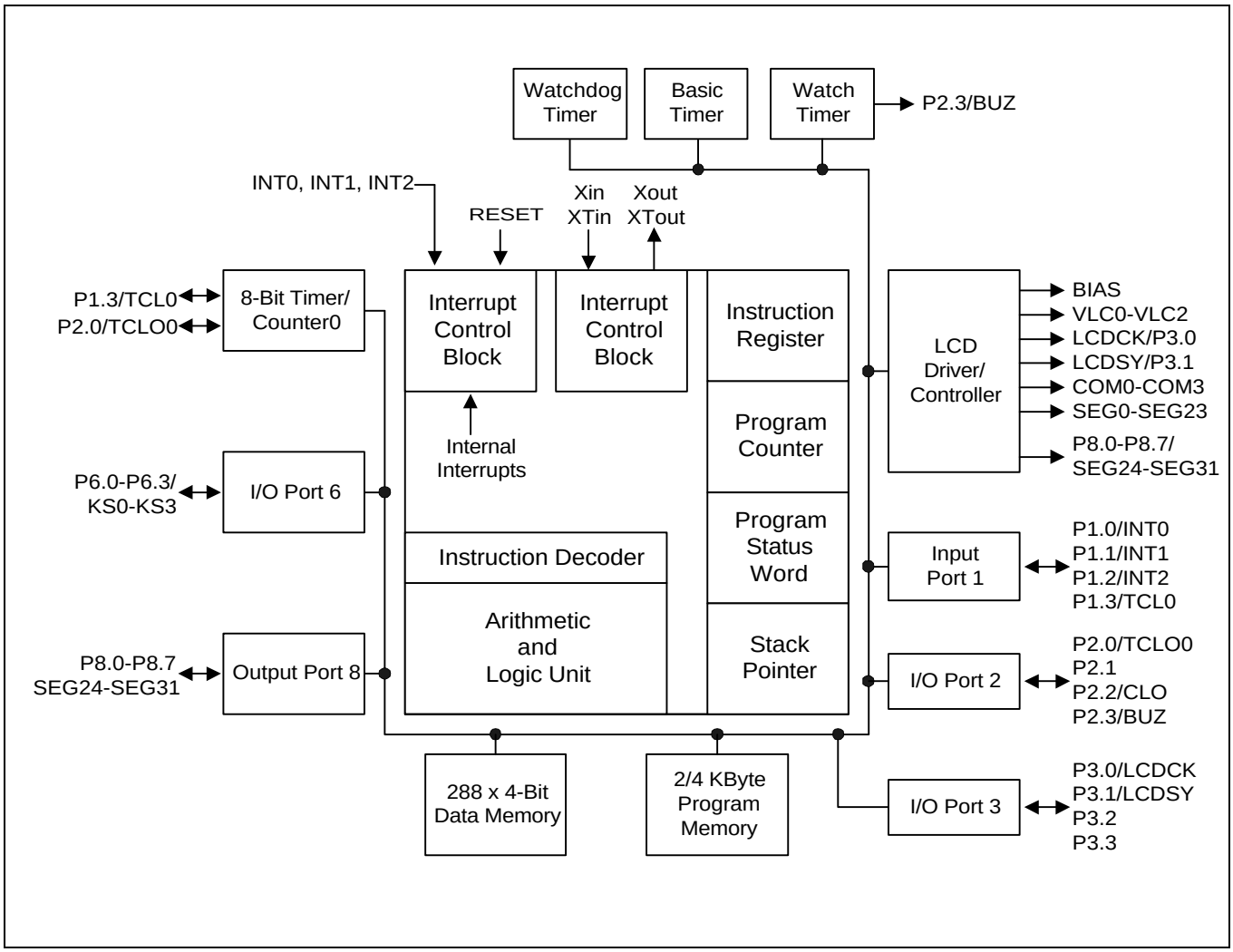

Figure 1-1. S3C72N2/C72N4 Simplified Block Diagram

PIN ASSIGNMENTS

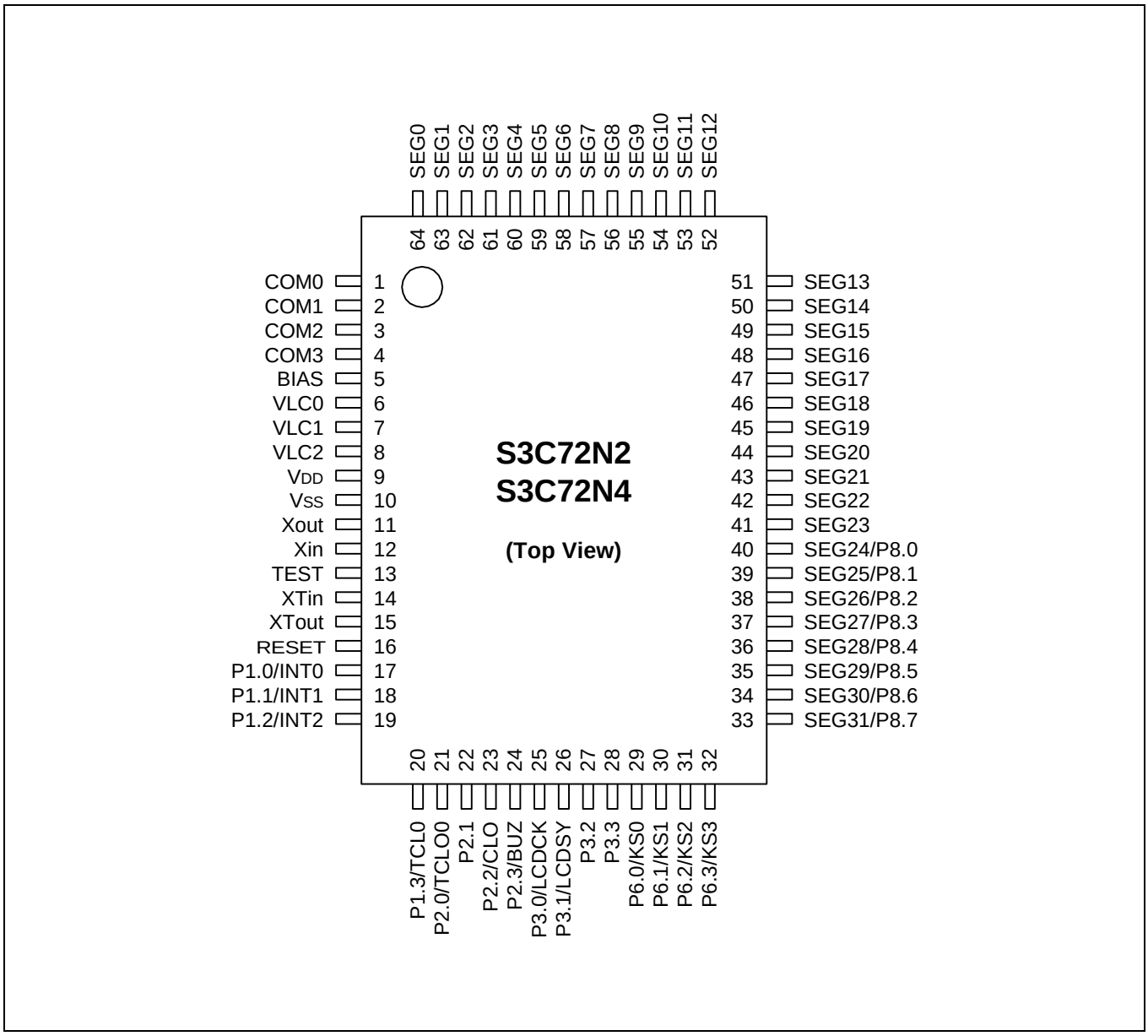

Figure 1-2. S3C72N2/C72N4 64-QFP Pin Assignment

PIN DESCRIPTIONS

Table 1-1. S3C72N2/C72N4 Pin Descriptions

Pin Name	Pin Type	Description	Number	Share Pin	Reset Value	Circuit Type
P1.0 P1.1 P1.2 P1.3	I	4-bit input port. 1-bit or 4-bit read and test is possible. 4-bit pull-up resistors are software assignable.	17 18 19 20	INT0 INT1 INT2 TCL0	Input	A-4
P2.0 P2.1 P2.2 P2.3	I/O	4-bit I/O port. 1-bit and 4-bit read/write and test is possible. 4-bit pull-up resistors are software assignable.	21 22 23 24	TCLO0 – CLO BUZ	Input	D
P3.0 P3.1 P3.2 P3.3	I/O	4-bit I/O port. 1-bit and 4-bit read/write and test is possible. Each individual pin can be specified as input or output. 4-bit pull-up resistors are software assignable.	25 26 27 28	LCDCK LCDSY	Input	D
P6.0–P6.3	I/O	4-bit I/O ports. Pins are individually software configurable as input or output. 1-bit and 4-bit read/write and test is possible. 4-bit pull-up resistors are software assignable.	29–32	KS0–KS3	Input	D
P8.0–P8.7	O	Output port for 1-bit data (for use as CMOS driver only)	40–33	SEG24–SEG31	Output	H-1
SEG0–SEG23	O	LCD segment signal output	64–41	–	Output	H
SEG24–SEG31	O	LCD segment signal output	40–33	P8.0–P8.7	Output	H-1
COM0–COM3	O	LCD common signal output	1–4	–	Output	H
V_{LC0}–V_{LC2}	–	LCD power supply. Built-in voltage dividing resistors	6–8	–	–	–
BIAS	–	LCD power control	5	–	–	–
LCDCK	I/O	LCD clock output for display expansion	25	P3.0	Input	D

Table 1-1. S3C72N2/C72N4 Pin Descriptions (Continued)

Pin Name	Pin Type	Description	Number	Share Pin	Reset Value	Circuit Type
LCDSY	I/O	LCD synchronization clock output for LCD display expansion	26	P3.1	Input	D
TCL0	I	External clock input for timer/counter 0	20	P1.3	Input	A-4
TCLO0	I/O	Timer/counter 0 clock output	21	P2.0	Input	D
INT0 INT1	I	External interrupt. The triggering edge for INT0 and INT1 is selectable. Only INT0 is synchronized with the system clock.	17 18	P1.0 P1.1	Input	A-4
INT2	I	Quasi-interrupt with detection of rising edge signals.	19	P1.2	Input	A-4
KS0–KS3	I/O	Quasi-interrupt input with falling edge detection.	29–32	P6.0–P6.3	Input	D
CLO	I/O	CPU clock output	23	P2.2	Input	D
BUZ	I/O	2, 4, 8 or 16 kHz frequency output for buzzer sound with 4.19 MHz main system clock or 32.768 kHz subsystem clock.	24	P2.3	Input	D
X_{IN}, X_{OUT}	–	Crystal, ceramic or RC oscillator pins for main system clock. (For external clock input, use X_{IN} and input X_{IN}'s reverse phase to X_{OUT})	12,11	–	–	–
XT_{IN}, XT_{OUT}	–	Crystal oscillator pins for subsystem clock. (For external clock input, use XT_{IN} and input XT_{IN}'s reverse phase to XT_{OUT})	14,15	–	–	–
V_{DD}	–	Main power supply	9	–	–	–
V_{SS}	–	Ground	10	–	–	–
RESET	–	Reset signal	16	–	Input	B
TEST	–	Test signal input (must be connected to V_{SS})	13	–	–	–

NOTE: Pull-up resistors for all I/O ports automatically disabled if they are configured to output mode.

PIN CIRCUIT DIAGRAMS

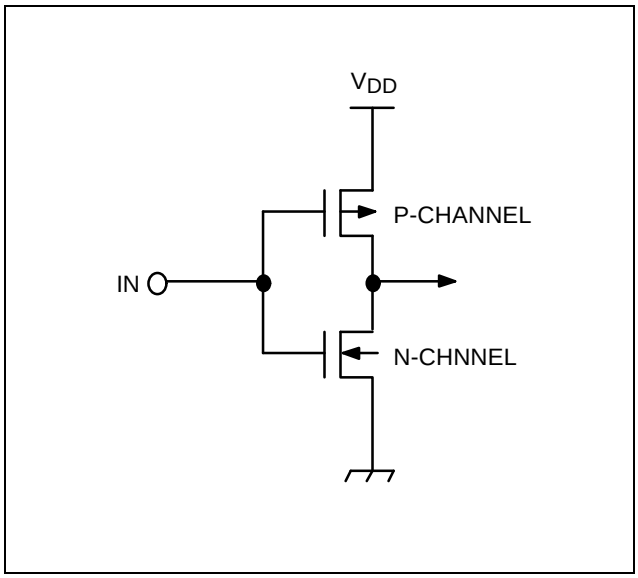

Figure 1-3. Pin Circuit Type A

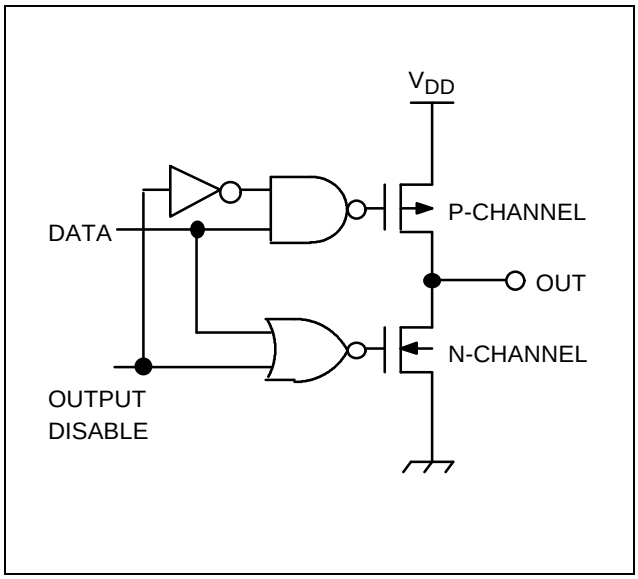

Figure 1-5. Pin Circuit Type C

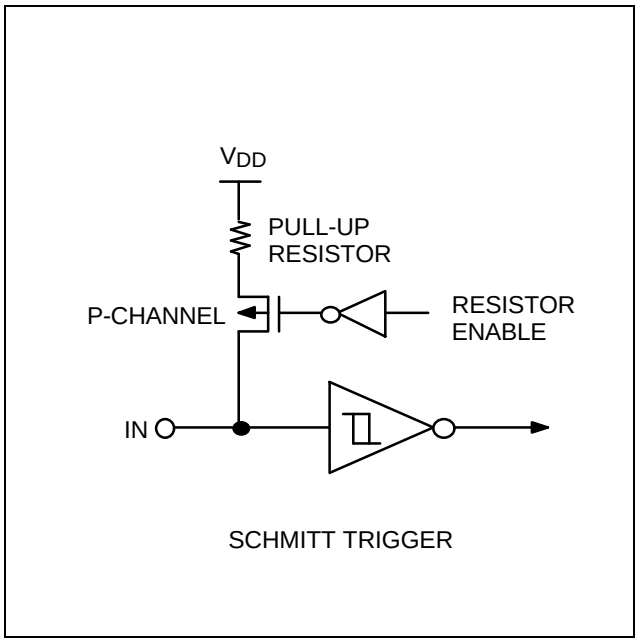

Figure 1-4. Pin Circuit Type A-4 (P1)

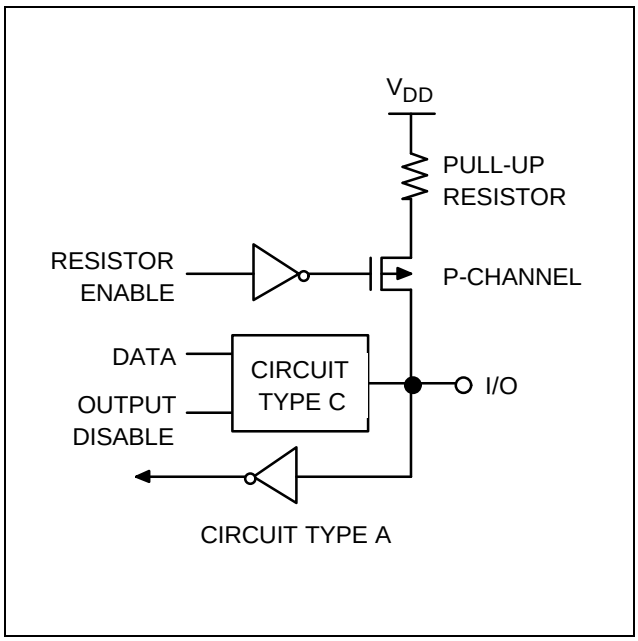

Figure 1-6. Pin Circuit Type D (P2, P3, and P6)

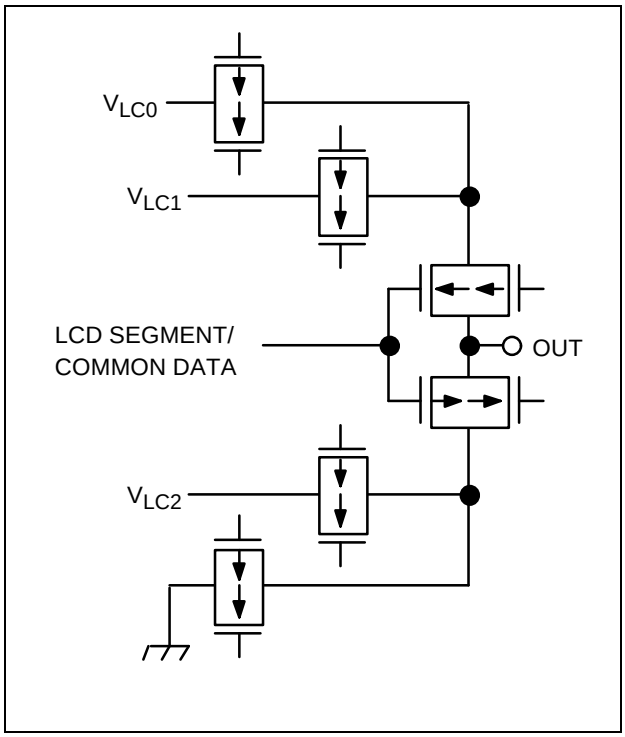

Figure 1-7. Pin Circuit Type H (SEG/COM)

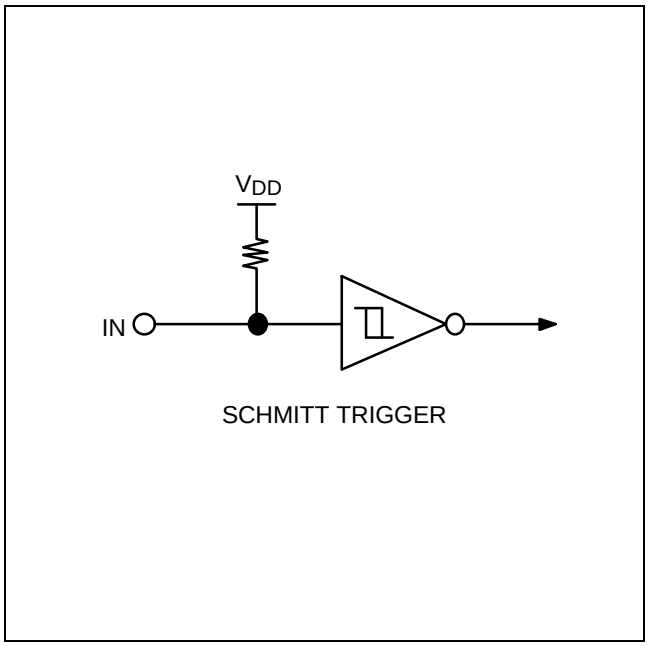

Figure 1-9. Pin Circuit Type B (RESET)

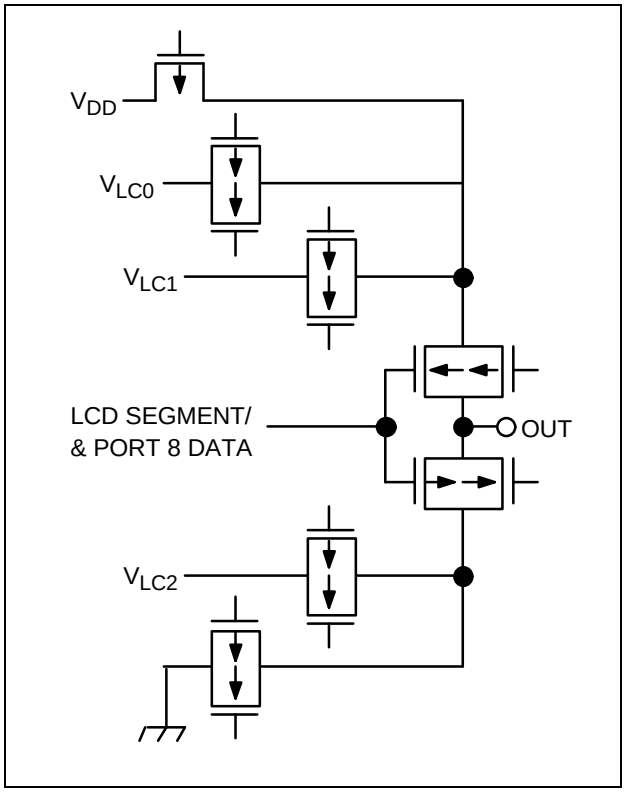

Figure 1-8. Pin Circuit Type H-1 (P8)

13 ELECTRICAL DATA

OVERVIEW

In this section, information on S3C72N2/C72N4 electrical characteristics is presented as tables and graphics. The information is arranged in the following order:

STANDARD ELECTRICAL CHARACTERISTICS

— Absolute maximum ratings
— D.C. electrical characteristics
— Main system clock oscillator characteristics
— Subsystem clock oscillator characteristics
— I/O capacitance
— A.C. electrical characteristics
— Operating voltage range

MISCELLANEOUS TIMING WAVEFORMS

— A.C timing measurement point
— Clock timing measurement at X_{IN}
— Clock timing measurement at XT_{IN}
— TCL0 timing
— Input timing for RESET
— Input timing for external interrupts

STOP MODE CHARACTERISTICS AND TIMING WAVEFORMS

— RAM data retention supply voltage in stop mode
— Stop mode release timing when initiated by RESET
— Stop mode release timing when initiated by an interrupt request

Table 13-1. Absolute Maximum Ratings

(T_A = 25 °C)

Parameter	Symbol	Conditions	Rating	Units
Supply Voltage	V_{DD}	–	– 0.3 to + 6.5	V
Input Voltage	V_{I1}	All I/O ports	– 0.3 to V_{DD} + 0.3	
Output Voltage	V_O		– 0.3 to V_{DD} + 0.3	
Output Current High	I_{OH}	One I/O port active	– 15	mA
		All I/O ports active	– 30	
Output Current Low	I_{OL}	One I/O port active	+ 30 (Peak value)	
			+ 15 (note)	
		Total value for ports 2 and 3	+ 60 (Peak value)	
			+ 20 (note)	
		Total value for port 6	+ 50	
			+ 20 (note)	
Operating Temperature	T_A	–	– 40 to + 85	°C
Storage Temperature	T_{stg}	–	– 65 to + 150	

NOTE: The values for Output Current Low (I_{OL}) are calculated as Peak Value $\times\sqrt{\text{Duty}}$.

Table 13-2. D.C. Electrical Characteristics

(T_A = – 40 °C to + 85 °C, V_{DD} = 1.8 V to 5.5 V)

Parameter	Symbol	Conditions	Min	Typ	Max	Units
Input high voltage	V_{IH1}	All input pins except those specified below for V_{IH2}, V_{IH3}	0.7 V_{DD}	–	V_{DD}	V
	V_{IH2}	Ports 1, 6, and RESET	0.8 V_{DD}	–	V_{DD}	
	V_{IH3}	X_{IN}, X_{OUT}, and XT_{IN}	V_{DD} – 0.1	–	V_{DD}	
Input low voltage	V_{IL1}	Ports 2 and 3	–	–	0.3 V_{DD}	V
	V_{IL2}	Ports 1, 6 and RESET	–	–	0.2 V_{DD}	
	V_{IL3}	X_{IN}, X_{OUT}, and XT_{IN}	–	–	0.1	
Output high voltage	V_{OH1}	V_{DD} = 4.5 V to 5.5 V I_{OH} = – 1 mA Ports 2, 3, 6 and BIAS	V_{DD} – 1.0	–	–	V
	V_{OH2}	V_{DD} = 4.5 V to 5.5 V I_{OH} = –100 µA Port 8 only	V_{DD} – 2.0	–	–	

Table 13-2. D.C. Electrical Characteristics (Continued)

(T_A = – 40 °C to + 85 °C, V_{DD} = 1.8 V to 5.5 V)

Parameter	Symbol	Conditions	Min	Typ	Max	Units
Output low voltage	V_{OL1}	V_{DD} = 4.5 V to 5.5 V I_{OL} = 15 mA, Ports 2, 3, 6	–	0.4	2	V
	V_{OL2}	V_{DD} = 4.5 V to 5.5 V I_{OL} = 100 µA; Port 8 only	–	–	1	
Input high leakage current	I_{LIH1}	V_{IN} = V_{DD} All input pins except those specified below for I_{LIH2}	–	–	3	µA
	I_{LIH2}	V_{IN} = V_{DD} X_{IN}, X_{OUT} and XT_{IN}			20	
Input low leakage current	I_{LIL1}	V_{IN} = 0 V All input pins except X_{IN}, X_{OUT}, and XT_{IN}	–	–	– 3	
	I_{LIL2}	V_{IN} = 0 V X_{IN}, X_{OUT}, and XT_{IN}			– 20	
Output high leakage current	I_{LOH1}	V_{OUT} = V_{DD} All output pins	–	–	3	µA
Output low leakage current	I_{LOL}	V_{OUT} = 0 V All output pins			– 3	
Pull-up resistor	R_{L1}	V_{IN} = 0 V; V_{DD} = 5 V Ports 1, 2, 3, 6	25	50	100	KΩ
		V_{DD} = 3 V	50	100	200	
	R_{L2}	V_{IN} = 0 V; V_{DD} = 5 V RESET	100	250	400	
		V_{DD} = 3 V	200	500	800	
LCD voltage dividing resistor	R_{LCD}	T_A = 25 °C	120	170	220	
COM output impedance	R_{COM}	V_{DD} = 5 V	–	3	6	
		V_{DD} = 3 V		5	15	
SEG output impedance	R_{SEG}	V_{DD} = 5 V		3	6	
		V_{DD} = 3 V		5	15	
COM output voltage deviation	V_{DC}	V_{DD} = 5 V (V_{LC0}-COMi) Io = ± 15uA (i= 0-3)	–	± 45	± 90	mV

Table 13-2. D.C. Electrical Characteristics (Continued)

(T_A = – 40 °C to + 85 °C, V_{DD} = 1.8 V to 5.5 V)

Parameter	Symbol	Conditions	Min	Typ	Max	Units
SEG output voltage deviation	V_{DS}	V_{DD} = 5 V (V_{LC0}-SEGi) Io = ± 15uA (i= 0-31)	–	± 45	± 90	mV
VLC0 Output voltage	V_{LC0}	T_A = 25 °C	$0.6V_{DD}$ – 0.2	0.6VDD	$0.6V_{DD}$ + 0.2	V
VLC1 Output voltage	V_{LC1}	T_A = 25 °C	$0.4V_{DD}$ – 0.2	0.4VDD	$0.4V_{DD}$ + 0.2	
VLC2 Output voltage	V_{LC2}	T_A = 25 °C	$0.2V_{DD}$ – 0.2	0.2VDD	$0.2V_{DD}$ + 0.2	

Table 13-2. D.C. Electrical Characteristics (Concluded)

(T_A = – 40 °C to + 85 °C, V_{DD} = 1.8 V to 5.5 V)

Parameter	Symbol	Conditions		Min	Typ	Max	Units
Supply Current (1)	I_{DD1} (2)	Main operating: V_{DD} = 5 V ± 10% CPU = fx/4 SCMOD = 0000B Crystal oscillator C1 = C2 = 22 pF	6.0 MHz 4.19 MHz	–	3.5 2.5	8 5.5	mA
		V_{DD} = 3 V ± 10%	6.0 MHz 4.19 MHz		1.6 1.2	4 3	
	I_{DD2} (2)	Main idle mode; V_{DD} = 5 V ± 10% CPU = fx/4 SCMOD =0000B Crystal oscillator C1 = C2 = 22 pF	6.0 MHz 4.19 MHz	–	1 0.9	2.5 2	
		V_{DD} = 3 V ± 10%	6.0 MHz 4.19 MHz		0.5 0.4	1.0 0.8	
	I_{DD3}	Sub operating: V_{DD} = 3 V ± 10% CPU = fxt/4, SCMOD = 1001B 32 kHz crystal oscillator		–	15	30	µA
	I_{DD4}	Sub idle mode: V_{DD} = 3 V ± 10% CPU = fxt/4, SCMOD = 1001B 32 kHz crystal oscillator		–	6	15	
	I_{DD5}	Stop mode: VDD = 5V ± 10% CPU=fxt/4, SCMOD = 1101B		–	0.5	3	
	I_{DD6} (3)	Stop mode: V_{DD} = 5 V ± 10% CPU = fx/4, SCMOD = 0100B					

NOTES:

1. D.C. electrical values for supply current (I_{DD1} to I_{DD6}) do not include current drawn through internal pull-up resistors and through LCD voltage dividing resistors.
2. Data includes the power consumption for sub-system clock oscillation.
3. When the system clock mode register, SCMOD, is set to 0100B, the sub-system clock oscillation stops. The main-system clock oscillation stops by the STOP instruction.

Table 13-3. Main System Clock Oscillator Characteristics

(T_A = – 40 °C + 85 °C, V_{DD} = 1.8 V to 5.5 V)

Oscillator	Clock Configuration	Parameter	Test Condition	Min	Typ	Max	Units
Ceramic Oscillator	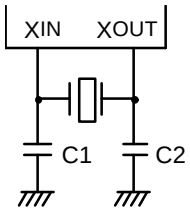	Oscillation frequency (1)	–	0.4	–	6.0	MHz
		Stabilization time (2)	Stabilization occurs when V_{DD} is equal to the minimum oscillator voltage range.	–	–	4	ms
Crystal Oscillator	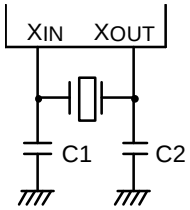	Oscillation frequency (1)	–	0.4	–	6.0	MHz
		Stabilization time (2)	V_{DD} = 4.5 V to 5.5 V	–	–	10	ms
			V_{DD} = 1.8 V to 4.5 V	–	–	30	
External Clock	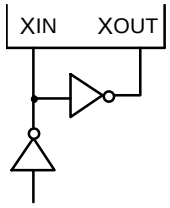	X_{IN} input frequency (1)	–	0.4	–	6.0	MHz
		X_{IN} input high and low level width (t_{XH}, t_{XL})	–	83.3	–	–	ns
RC Oscillator	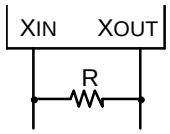	Frequency (1)	V_{DD} = 5 V R = 20 KΩ, V_{DD} = 5 V R = 39 KΩ, V_{DD} = 3 V	0.4	– 2.0 1.0	2	MHz

NOTES:

1. Oscillation frequency and X_{IN} input frequency data are for oscillator characteristics only.
2. Stabilization time is the interval required for oscillator stabilization after a power-on occurs, or when stop mode is terminated.

Table 13-4. Subsystem Clock Oscillator Characteristics

(T_A = – 40 °C + 85 °C, V_{DD} = 1.8 V to 5.5 V)

Oscillator	Clock Configuration	Parameter	Test Condition	Min	Typ	Max	Units
Crystal Oscillator	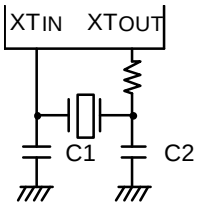	Oscillation frequency (1)	–	32	32.768	35	kHz
		Stabilization time (2)	V_{DD} = 4.5 V to 5.5 V	–	1.0	2	s
			V_{DD} = 1.8 V to 4.5 V	–	–	10	
External Clock	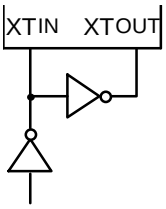	XT_{IN} input frequency (1)	–	32	–	100	KHz
		XT_{IN} input high and low level width (t_{XTL}, t_{XTH})	–	5	–	15	µs

NOTES:
1. Oscillation frequency and XT_{IN} input frequency data are for oscillator characteristics only.
2. Stabilization time is the interval required for oscillator stabilization after a power-on occurs.

Table 13-5. Input/Output Capacitance

(T_A = 25 °C, V_{DD} = 0 V)

Parameter	Symbol	Condition	Min	Typ	Max	Units
Input capacitance	C_{IN}	f = 1 MHz; Unmeasured pins are returned to V_{SS}	–	–	15	pF
Output capacitance	C_{OUT}		–	–	15	pF
I/O capacitance	C_{IO}		–	–	15	pF

Table 13-6. A.C. Electrical Characteristics

(T_A = – 40 °C to + 85 °C, V_{DD} = 1.8 V to 5.5 V)

Parameter	Symbol	Conditions	Min	Typ	Max	Units
Instruction cycle time (1)	t_{CY}	V_{DD} = 2.7 V to 5.5 V	0.67	–	64	µs
		V_{DD} = 1.8 V to 5.5 V	0.95	–	64	
		With subsystem clock (fxt)	114	122	125	
TCL0 input frequency	f_{TI0}	V_{DD} = 2.7 V to 5.5 V	0	–	1.5	MHz
		V_{DD} = 1.8 V to 5.5 V			1	MHz
TCL0 input high, low width	t_{TIH0}, t_{TIL0}	V_{DD} = 2.7 V to 5.5 V	0.48	–	–	µs
		V_{DD} = 1.8 V to 5.5 V	1.8			
Interrupt input high, low width	t_{INTH}, t_{INTL}	INT0	(2)	–	–	µs
		INT1, INT2, KS0–KS3	10			
RESET Input Low Width	t_{RSL}	Input	10	–	–	µs

NOTES:

1. Unless otherwise specified, Instruction Cycle Time condition values assume a main system clock (fx) source.
2. Minimum value for INT0 is based on a clock of $2t_{CY}$ or 128/fx as assigned by the IMOD0 register setting.

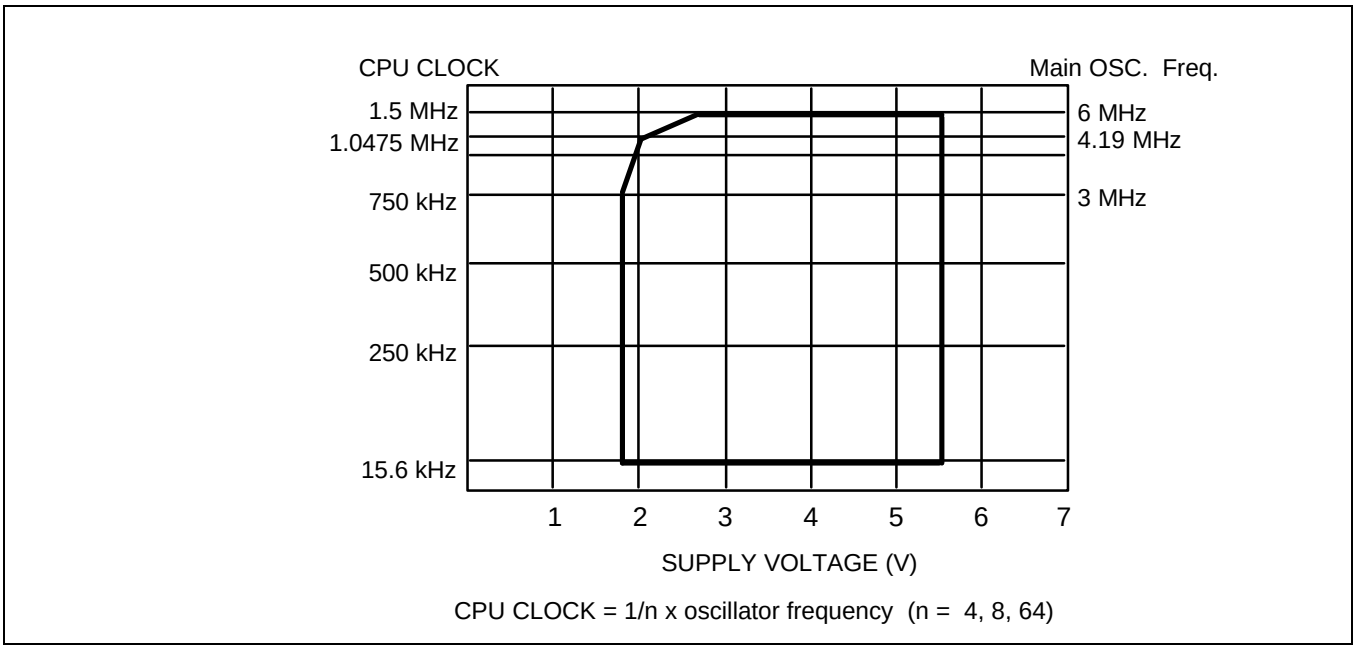

Figure 13-1. Standard Operating Voltage Range

Table 13-7. RAM Data Retention Supply Voltage in Stop Mode

(T_A = – 40 °C to + 85 °C)

Parameter	Symbol	Conditions	Min	Typ	Max	Unit
Data retention supply voltage	V_{DDDR}	Normal operation	1.5	–	6.5	V
Data retention supply current	I_{DDDR}	V_{DDDR} = 2.0 V	–	0.1	1	µA
Release signal set time	t_{SREL}	Normal operation	0	–	–	µs
Oscillator stabilization wait time (1)	t_{WAIT}	Released by RESET	–	2^{17} / fx	–	ms
		Released by interrupt	–	(2)	–	

NOTES:
1. During oscillator stabilization wait time, all CPU operations must be stopped to avoid instability during oscillator start-up.
2. Use the basic timer mode register (BMOD) interval timer to delay execution of CPU instructions during the wait time.

TIMING WAVEFORMS

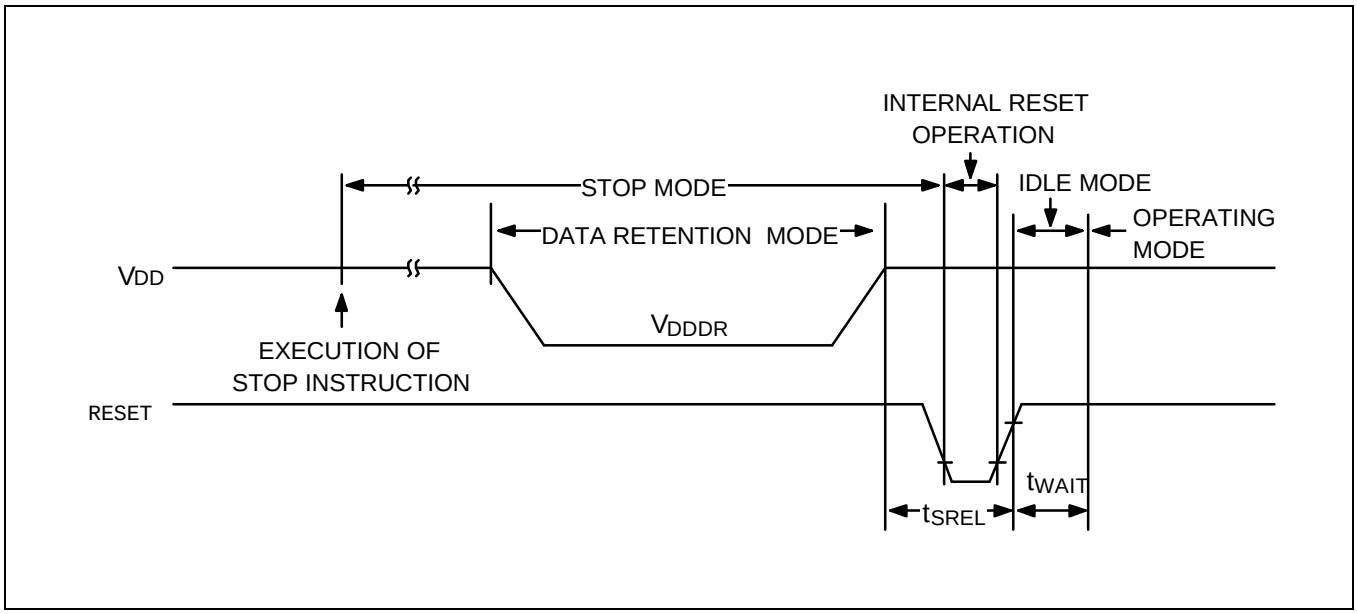

Figure 13-2. Stop Mode Release Timing When Initiated By RESET

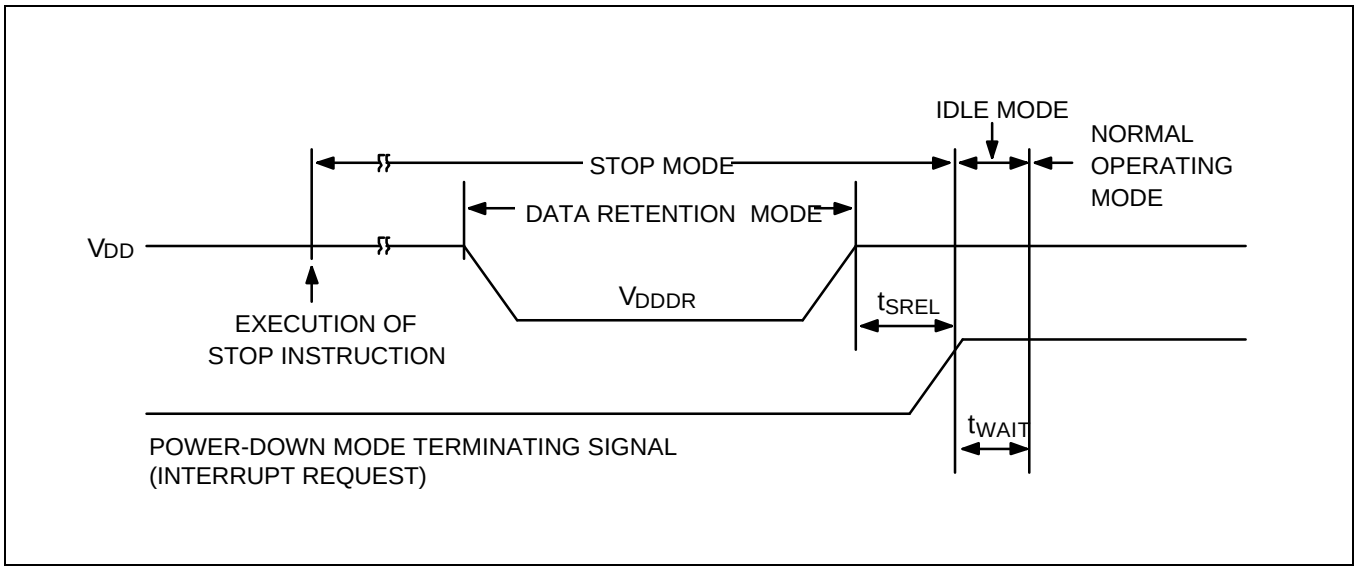

Figure 13-3. Stop Mode Release Timing When Initiated By Interrupt Request

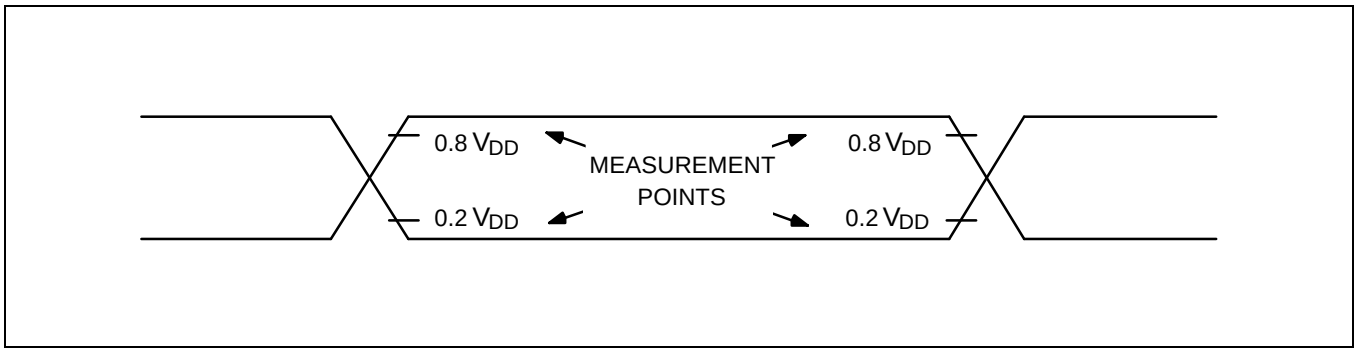

Figure 13-4. A.C. Timing Measurement Points (Except for X_{in} and XT_{in})

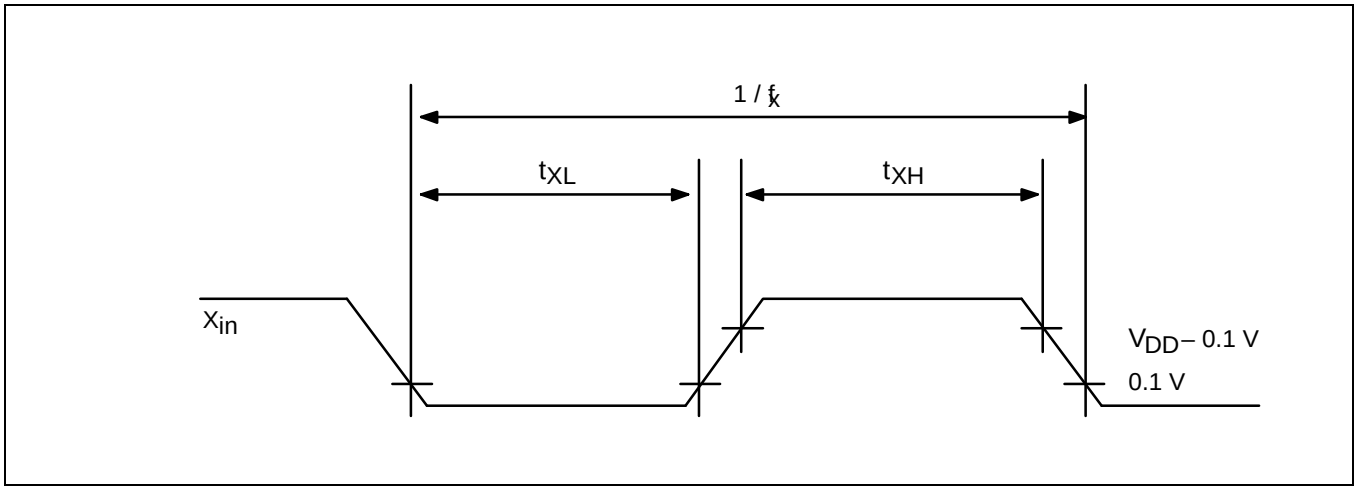

Figure 13-5. Clock Timing Measurement at X_{in}

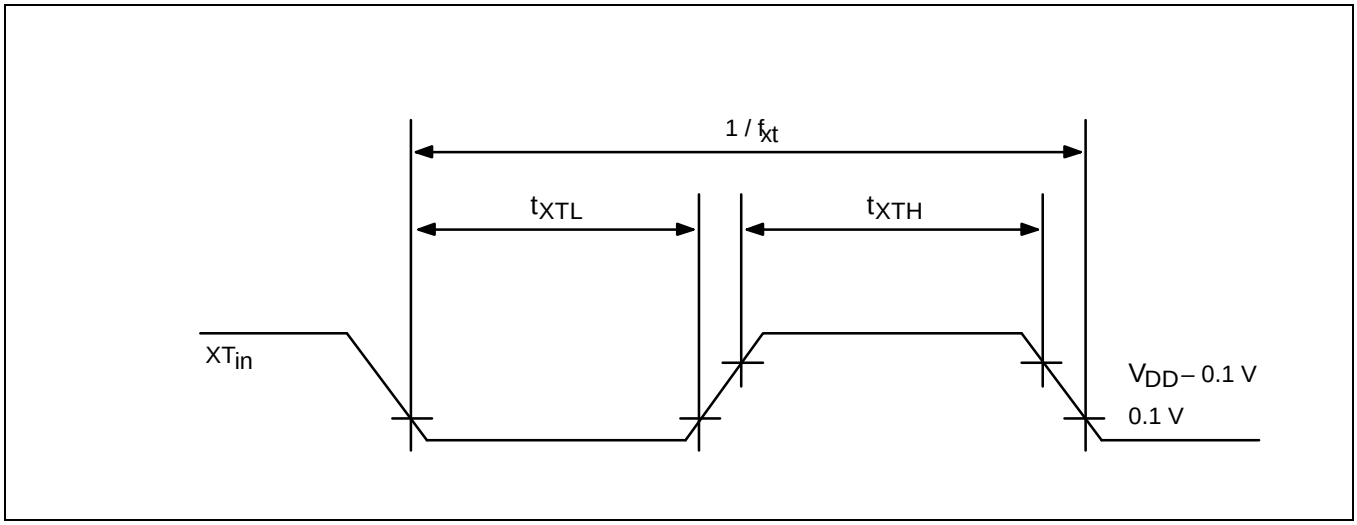

Figure 13-6. Clock Timing Measurement at XT_{in}

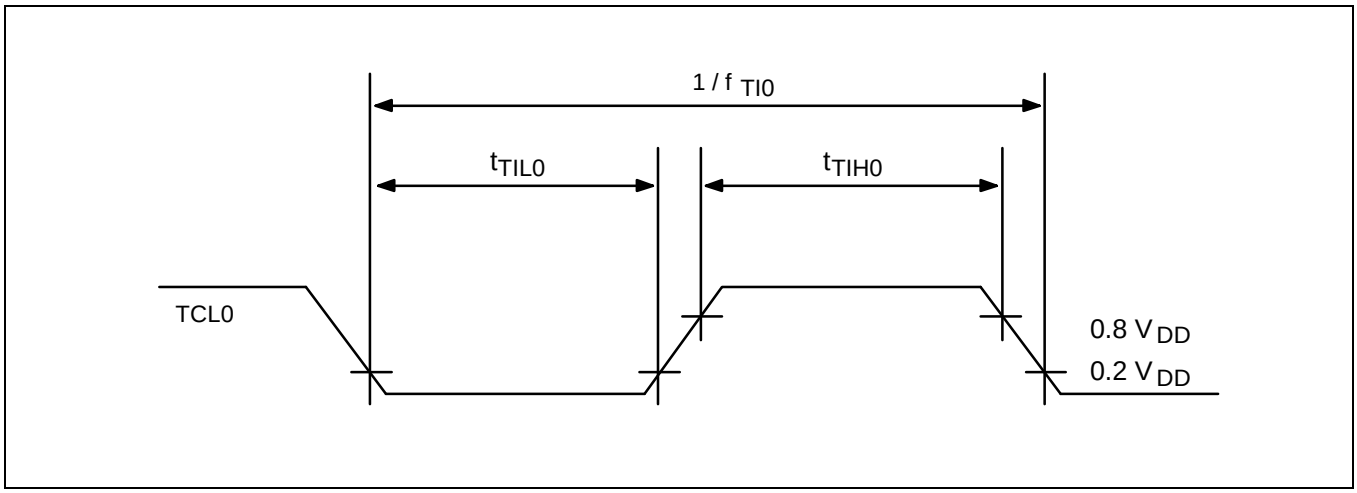

Figure 13-7. TCL0 Timing

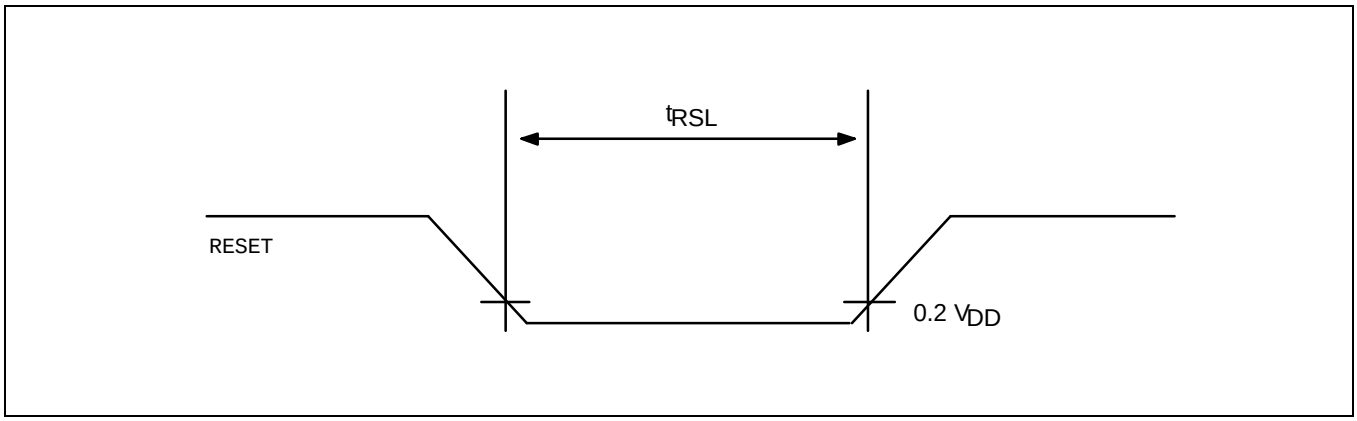

Figure 13-8. Input Timing for RESET Signal

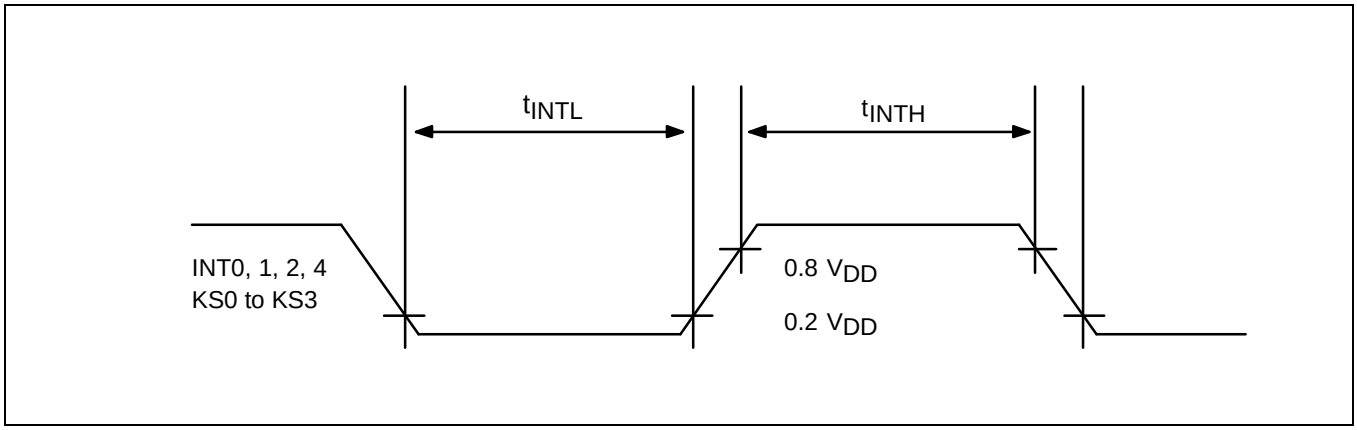

Figure 13-9. Input Timing for External Interrupts and Quasi-Interrupts

14 MECHANICAL DATA

OVERVIEW

The S3C72N2/C72N4 microcontroller is available in a 64-pin QFP package (Samsung: 64-QFP-1420F). Package dimensions are shown in Figure 14-1.

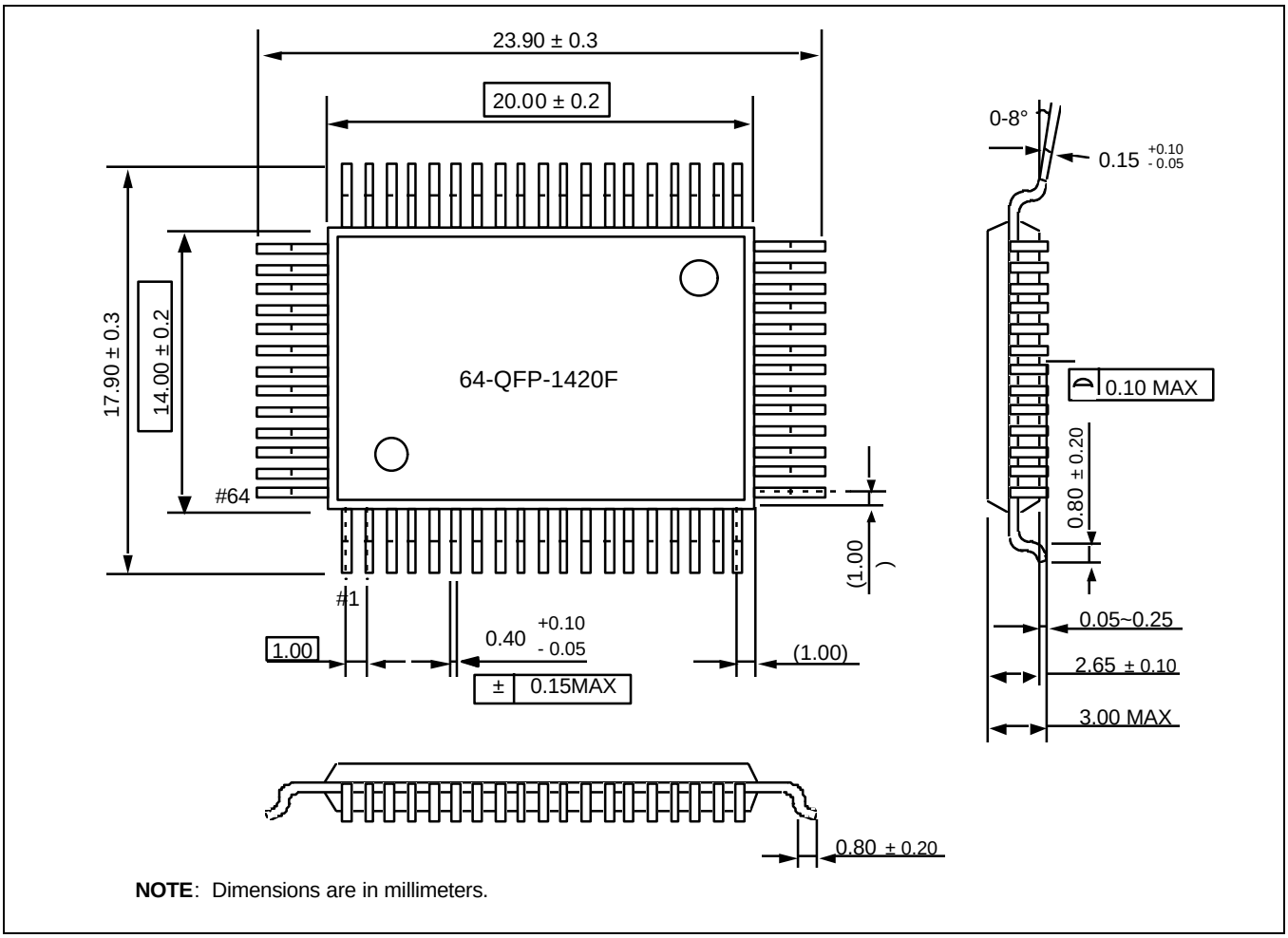

Figure 14-1. 64-QFP-1420F Package Dimensions

15 S3P72N4 OTP

OVERVIEW

The S3P72N4 single-chip CMOS microcontroller is the OTP (One Time Programmable) version of the S3C72N2/C72N4 microcontroller. It has an on-chip EPROM instead of masked ROM. The EPROM is accessed by a serial data format.

The S3P72N4 is fully compatible with the S3C72N2/C72N4, both in function and in pin configuration. Because of its simple programming requirements, the S3P72N4 is ideal for use as an evaluation chip for the S3C72N4.

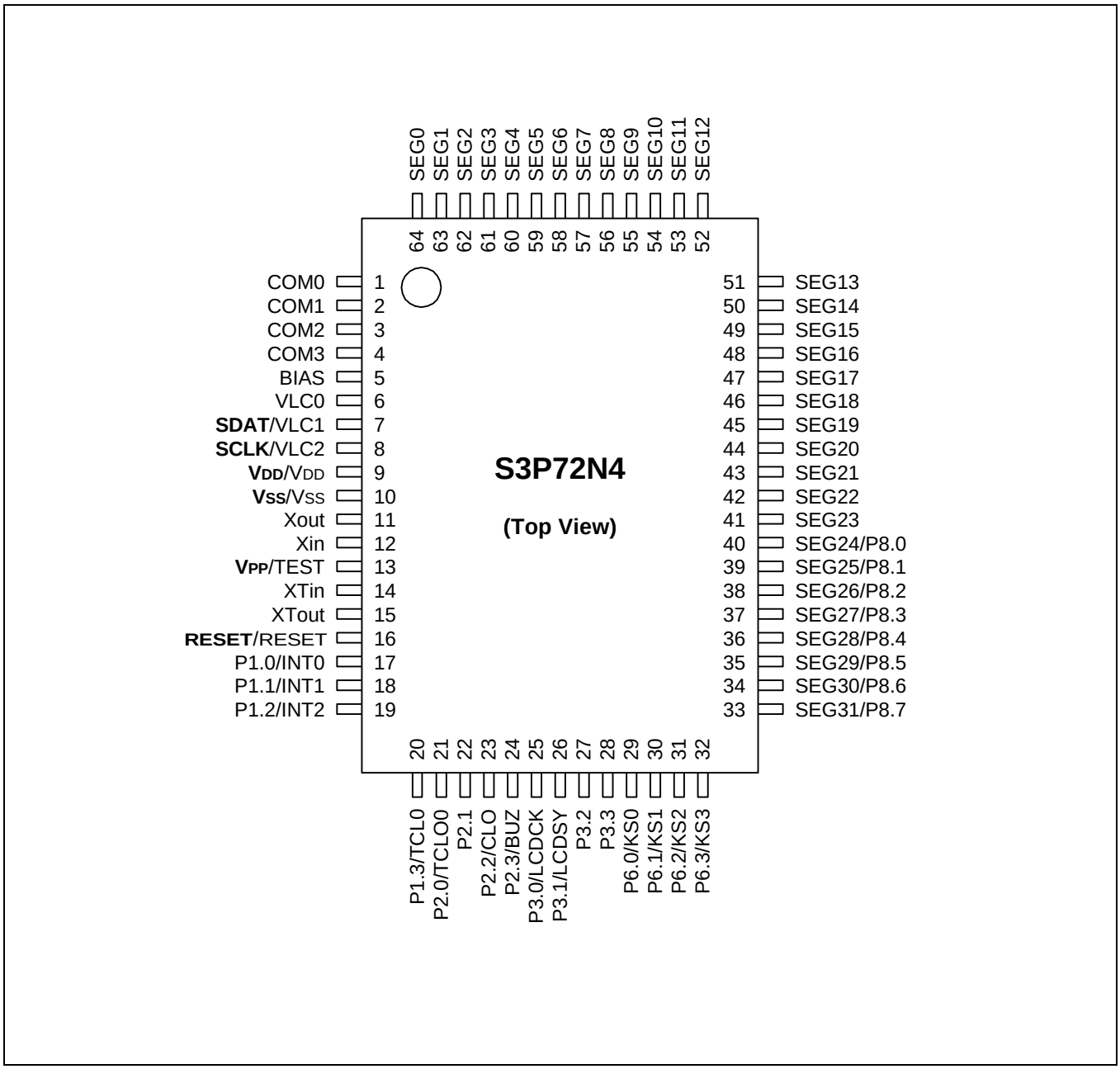

Figure 15-1. S3P72N4 Pin Assignments (64-QFP)

Table 15-1. Pin Descriptions Used to Read/Write the EPROM

Main Chip	During Programming			
Pin Name	**Pin Name**	**Pin No.**	**I/O**	**Function**
V_{LC1}	SDAT	7	I/O	Serial data pin. Output port when reading and input port when writing. Can be assigned as a Input / push-pull output port.
V_{LC2}	SCLK	8	I/O	Serial clock pin. Input only pin.
TEST	V_{PP} (TEST)	13	I	Power supply pin for EPROM cell writing (indicates that OTP enters into the writing mode). When 12.5 V is applied, OTP is in writing mode and when 5 V is applied, OTP is in reading mode. (Option)
RESET	RESET	16	I	Chip initialization
V_{DD} / V_{SS}	V_{DD} / V_{SS}	9/10	I	Logic power supply pin. V_{DD} should be tied to +5 V during programming.

Table 15-2. Comparison of S3P72N4 and S3C72N2/C72N4 Features

Characteristic	S3P72N4	S3C72N2/C72N4
Program Memory	4-Kbyte EPROM	2-K / 4-Kbyte mask ROM
Operating Voltage (V_{DD})	2.0 V to 5.5 V at 4.19 MHz 1.8 V to 5.5 V at 3 MHz	2.0 V to 5.5 V at 4.19 MHz 1.8 V to 5.5 V at 3 MHz
OTP Programming Mode	V_{DD} = 5 V, V_{PP} (TEST) = 12.5 V	–
Pin Configuration	64 QFP	64 QFP
EPROM Programmability	User Program 1 time	Programmed at the factory

OPERATING MODE CHARACTERISTICS

When 12.5 V is supplied to the Vpp (TEST) pin of the S3P72N4, the EPROM programming mode is entered. The operating mode (read, write, or read protection) is selected according to the input signals to the pins listed in Table 15-3 below.

Table 15-3. Operating Mode Selection Criteria

V_{DD}	Vpp (TEST)	REG/MEM	Address (A15-A0)	R/w	Mode
5 V	5 V	0	0000H	1	EPROM read
	12.5 V	0	0000H	0	EPROM program
	12.5 V	0	0000H	1	EPROM verify
	12.5 V	1	0E3FH	0	EPROM read protection

NOTE: "0" means low level; "1" means high level.

Table 15-4. D.C. Electrical Characteristics

(T_A = – 40 °C to + 85 °C, V_{DD} = 1.8 V to 5.5 V)

Parameter	Symbol	Conditions	Min	Typ	Max	Units
Input high voltage	V_{IH1}	All input pins except those specified below for V_{IH2}, V_{IH3}	0.7 V_{DD}	–	V_{DD}	V
	V_{IH2}	Ports 1, 6, and RESET	0.8 V_{DD}	–	V_{DD}	
	V_{IH3}	X_{IN}, X_{OUT}, and XT_{IN}	V_{DD} – 0.1	–	V_{DD}	
Input low voltage	V_{IL1}	Ports 2 and 3	–	–	0.3 V_{DD}	V
	V_{IL2}	Ports 1, 6 and RESET	–	–	0.2 V_{DD}	
	V_{IL3}	X_{IN}, X_{OUT}, and XT_{IN}	–	–	0.1	
Output high voltage	V_{OH1}	V_{DD} = 4.5 V to 5.5 V I_{OH} = – 1 mA Ports 2, 3, 6 and BIAS	V_{DD} – 1.0	–	–	V
	V_{OH2}	V_{DD} = 4.5 V to 5.5 V I_{OH} = –100 µA Port 8 only	V_{DD} – 2.0	–	–	
Output low voltage	V_{OL1}	V_{DD} = 4.5 V to 5.5 V I_{OL} = 15 mA, Ports 2, 3, 6	–	0.4	2	V
	V_{OL2}	V_{DD} = 4.5 V to 5.5 V I_{OL} = 100 µA; Port 8 only	–	–	1	
Input high leakage current	I_{LIH1}	V_{IN} = V_{DD} All input pins except those specified below for I_{LIH2}	–	–	3	µA
	I_{LIH2}	V_{IN} = V_{DD} X_{IN}, X_{OUT} and XT_{IN}	–	–	20	
Input low leakage current	I_{LIL1}	V_{IN} = 0 V All input pins except X_{IN}, X_{OUT}, and XT_{IN}	–	–	– 3	µA
	I_{LIL2}	V_{IN} = 0 V X_{IN}, X_{OUT}, and XT_{IN}	–	–	– 20	
Output high leakage current	I_{LOH1}	V_{OUT} = V_{DD} All output pins	–	–	3	µA
Output low leakage current	I_{LOL}	V_{OUT} = 0 V All output pins	–	–	– 3	

Table 15-4. D.C. Electrical Characteristics (Continued)

(T_A = – 40 °C to + 85 °C, V_{DD} = 1.8 V to 5.5 V)

Parameter	Symbol	Conditions	Min	Typ	Max	Units
Pull-up resistor	R_{L1}	V_{IN} = 0 V; V_{DD} = 5 V Ports 1, 2, 3, 6	25	50	100	KΩ
		V_{DD} = 3 V	50	100	200	
	R_{L2}	V_{IN} = 0 V; V_{DD} = 5 V RESET	100	250	400	
		V_{DD} = 3 V	200	500	800	
LCD voltage dividing resistor	R_{LCD}	TA = 25 °C	120	170	220	
COM output impedance	R_{COM}	V_{DD} = 5 V	–	3	6	
		V_{DD} = 3 V		5	15	
SEG output impedance	R_{SEG}	V_{DD} = 5 V		3	6	
		V_{DD} = 3 V		5	15	
COM output voltage deviation	VDC	V_{DD} = 5 V (VLC0-COMi) Io = ± 15uA (i= 0-3)	–	± 45	± 90	mV
SEG output voltage deviation	VDS	V_{DD} = 5 V (VLC0-SEGi) Io = ± 15uA (i= 0-31)	–	± 45	± 90	mV
VLC0 Output voltage	VLC0	TA = 25 °C	0.6VDD – 0.2	0.6VDD	0.6VDD + 0.2	V
VLC1 Output voltage	VLC1	TA = 25 °C	0.4VDD – 0.2	0.4VDD	0.4VDD + 0.2	
VLC2 Output voltage	VLC2	TA = 25 °C	0.2VDD – 0.2	0.2VDD	0.2VDD + 0.2	

Table 15-4. D.C. Electrical Characteristics (Concluded)

(T_A = – 40 °C to + 85 °C, V_{DD} = 1.8 V to 5.5 V)

Parameter	Symbol	Conditions		Min	Typ	Max	Units
Supply Current (1)	I_{DD1} (2)	Main operating: V_{DD} = 5 V ± 10% CPU = fx/4 SCMOD = 0000B Crystal oscillator C1 = C2 = 22 pF	6.0 MHz 4.19 MHz	–	3.5 2.5	8 5.5	mA
		V_{DD} = 3 V ± 10%	6.0 MHz 4.19 MHz		1.6 1.2	4 3	
	I_{DD2} (2)	Main idle mode; V_{DD} = 5 V ± 10% CPU = fx/4 SCMOD =0000B Crystal oscillator C1 = C2 = 22 pF	6.0 MHz 4.19 MHz	–	1 0.9	2.5 2	
		V_{DD} = 3 V ± 10%	6.0 MHz 4.19 MHz		0.5 0.4	1.0 0.8	
	I_{DD3}	Sub operating: V_{DD} = 3 V ± 10% CPU = fxt/4, SCMOD = 1001B 32 kHz crystal oscillator		–	15	30	µA
	I_{DD4}	Sub idle mode: V_{DD} = 3 V ± 10% CPU = fxt/4, SCMOD = 1001B 32 kHz crystal oscillator		–	6	15	
	I_{DD5}	Stop mode: VDD = 5V ± 10% CPU=fxt/4, SCMOD = 1101B		–	0.5	3	
	I_{DD6} (3)	Stop mode: V_{DD} = 5 V ± 10% CPU = fx/4, SCMOD = 0100B					

NOTES:

1. D.C. electrical values for supply current (I_{DD1} to I_{DD6}) do not include current drawn through internal pull-up resistors and through LCD voltage dividing resistors.
2. Data includes the power consumption for sub-system clock oscillation.
3. When the system clock mode register, SCMOD, is set to 0100B, the sub-system clock oscillation stops. The main-system clock oscillation stops by the STOP instruction.

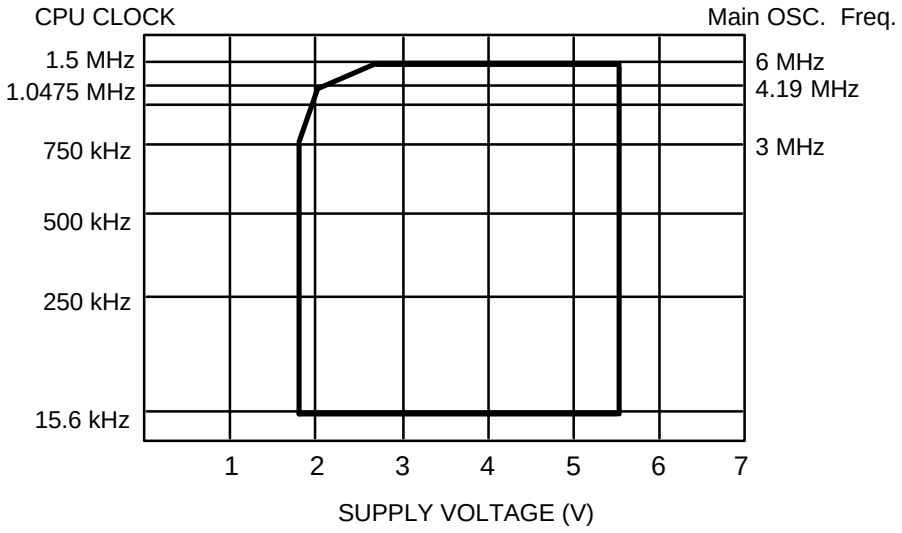

CPU CLOCK = 1/n x oscillator frequency (n = 4, 8, 64)

Figure 15-2. Standard Operating Voltage Range

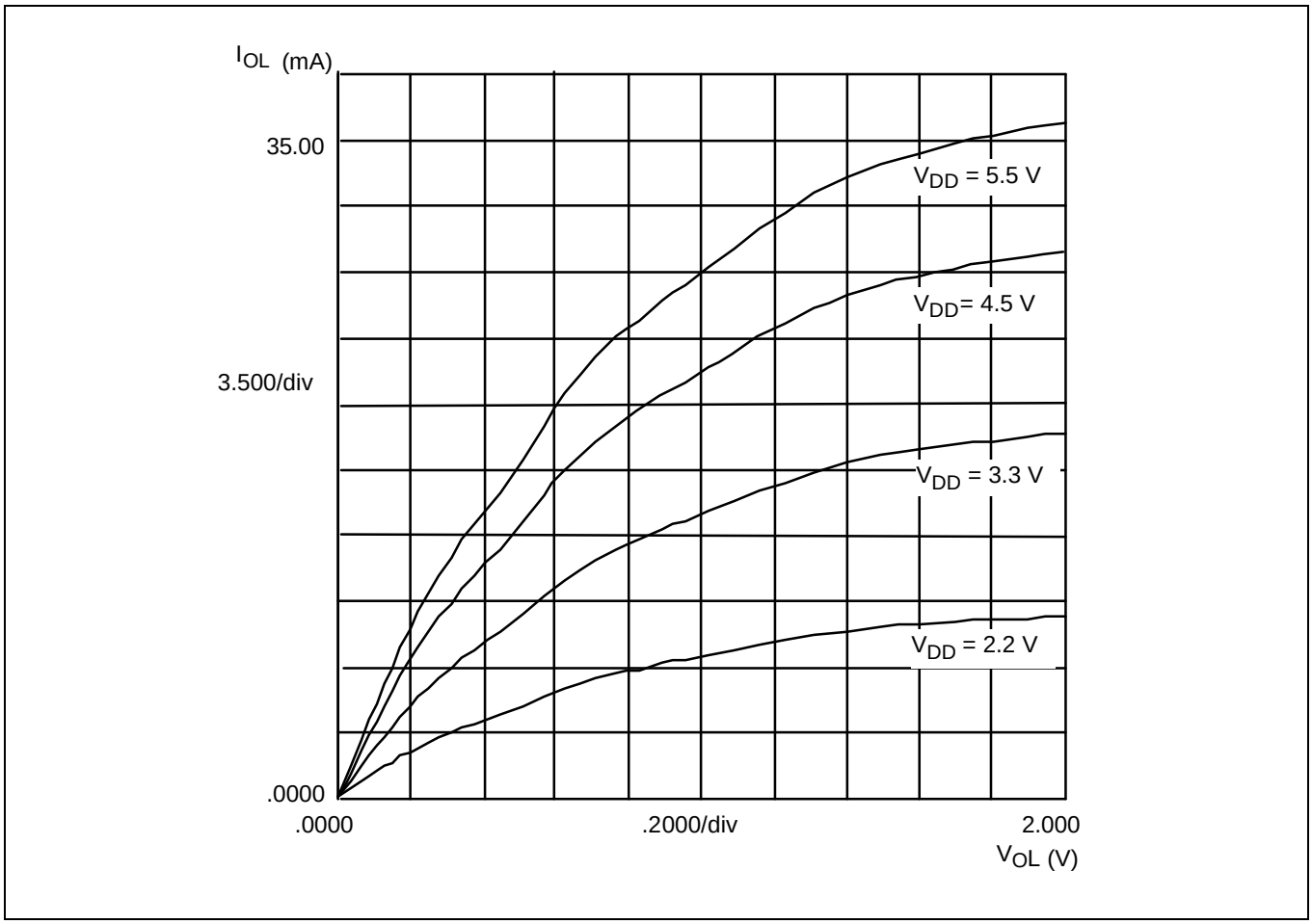

Figure 15-3. Port 2 I_{OL} vs V_{OL} Curve