Nippon Pulse
*Your Partner in Motion Control*

# S350
## Linear Shaft Motor

Visit nipponpulse.com to download 3D CAD drawings and 2D prints of this motor.

| | S350D | | S350T | | S350Q | | |
|---|---|---|---|---|---|---|---|
| Electrical Specs | S350D | S350D 1S | S350T | S350T 1S | S350Q | S350Q 4S | S350Q 1S |
| Continuous Force[1] | 104N (23lbs) | | 148N (33lbs) | | 190N (43lbs) | | |
| Continuous Current[1] | 1.5Arms | 3Arms | 1.5Arms | 4.5Arms | 2.7Arms | 1.4Arms | 5.4Arms |
| Acceleration Force[2] | 416N (94lbs) | | 592N (133lbs) | | 760N (171lbs) | | |
| Acceleration Current[2] | 6.0Arms | 12Arms | 6.0Arms | 18Arms | 11Arms | 5.4Arms | 22Arms |
| Force Constant ($K_f$) | 69N/Arms (15.5lbs/amp) | 35N/Arms (7.86lbs/amp) | 99N/Arms (22.18lbs/amp) | 33N/Arms (7.39lbs/amp) | 70N/Arms (15.8lbs/amp) | 141N/Arms (31.8lbs/amp) | 35N/Arms (7.9lbs/amp) |
| Back EMF ($K_e$) | 23V/m/s (0.59V/in/s) | 12V/m/s (0.31V/in/s) | 33V/m/s (0.84V/in/s) | 11V/m/s (0.28V/in/s) | 23V/m/s (0.58V/in/s) | 47V/m/s (1.19V/in/s) | 12V/m/s (0.3V/in/s) |
| Resistance 25°C,[3] | 14Ω | 3.5Ω | 20Ω | 2.2Ω | 6.9Ω | 28Ω | 1.7Ω |
| Inductance[3] | 22mH | 5.5mH | 33mH | 3.7mH | 11mH | 44mH | 2.7mH |
| Electric Time Constant | 1.58ms | | 1.63ms | | 1.58ms | | |
| Max. Rated Voltage (AC) | 240V | | | | | | |
| Fundamental Motor Constant ($K_m$) | 18.66N√W | | 21.95N√W | | 26.79N√W | | |
| Magnetic Pitch (North-North) | 120mm (4.72in) | | | | | | |

Is this the proper Linear Shaft Motor for your application? Use our SMART sizing program to assist in your decision.
This motor can be customized to fit your application demands; contact your application engineer for more information.
[1] Based on a temp rise of coil surface of 110°K over 25°C ambient temperature stalled forcer, and no external cooling or heat sinking.
[2] Can be maintained for a maximum of 40 seconds. Higher forces and current possible for short periods of time, consult Nippon Pulse for more information.
[3] All winding parameters listed are measured line-to-line (phase-to-phase).

| Thermal Specs | S350D | S350T | S350Q |
|---|---|---|---|
| Max Phase Temperature[4] | 135°C (275°F) | | |
| Thermal Resistance (Coil) ($K_q$) | 3.5°C/W | 2.4°C/W | 2.2°C/W |

[4] The standard temperature difference between the coil and the forcer surface is 25°C.

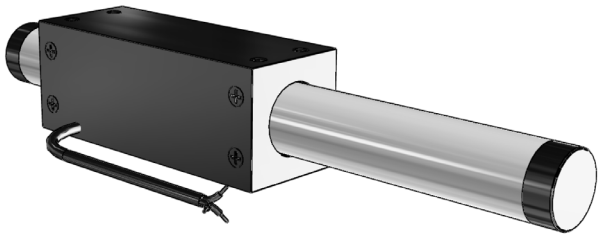

## Bus Voltage

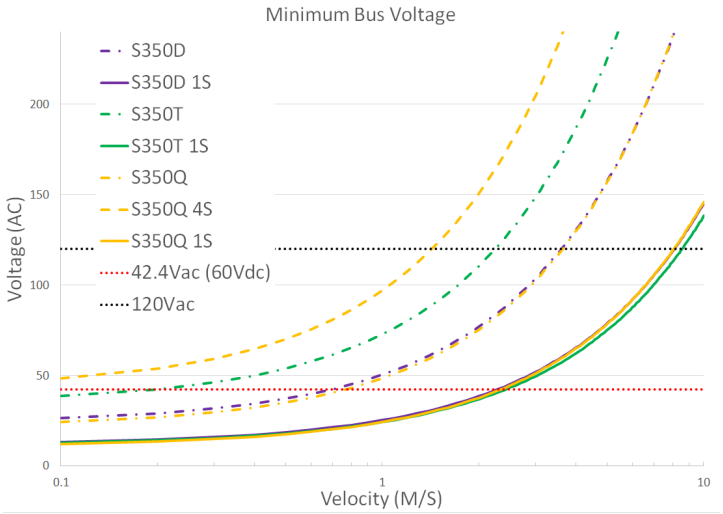


## Part Numbering System

| S | — | Shaft Size | Forcer Size (A) | — | Parallel Option | — | Usable Stroke (S) | — | Options | — | Options |
|---|---|---|---|---|---|---|---|---|---|---|---|
| | | 350 | X | | XX | | XXXXst | | XX | | XX |
| | | | D: Double (2) windings<br>T: Triple (3) windings<br>Q: Quadruple (4) windings | | Blank: Single Motor<br>PL: Parallel Motors | | 100-2000mm | | ST: Standard<br>WP: Water Resistant<br>HA: Digital Hall Effect<br>CE: CE type motor<br>FG: Frame Ground | | Blank: Standard<br>FO: Forcer Only<br>SO: Shaft Only |

| Forcer Specs | S350D | S350T | S350Q |
|---|---|---|---|
| Forcer Length (A) | 160mm (6.3in) | 220mm (8.7in) | 280mm (11.0in) |
| Forcer Width | 60mm (2.36in) | | |
| Forcer Screw Pitch (P) | 140mm (5.5in) | 200mm (7.9in) | 260mm (10.2in) |
| Forcer Weight | 1.3kg (2.9lbs) | 1.9kg (4.2lbs) | 2.4kg (5.3lbs) |
| Gap | 1.00mm (0.04in) | | |
| Screw | M8 | | |
| Tightening Torque | 12.5 Nm | | |

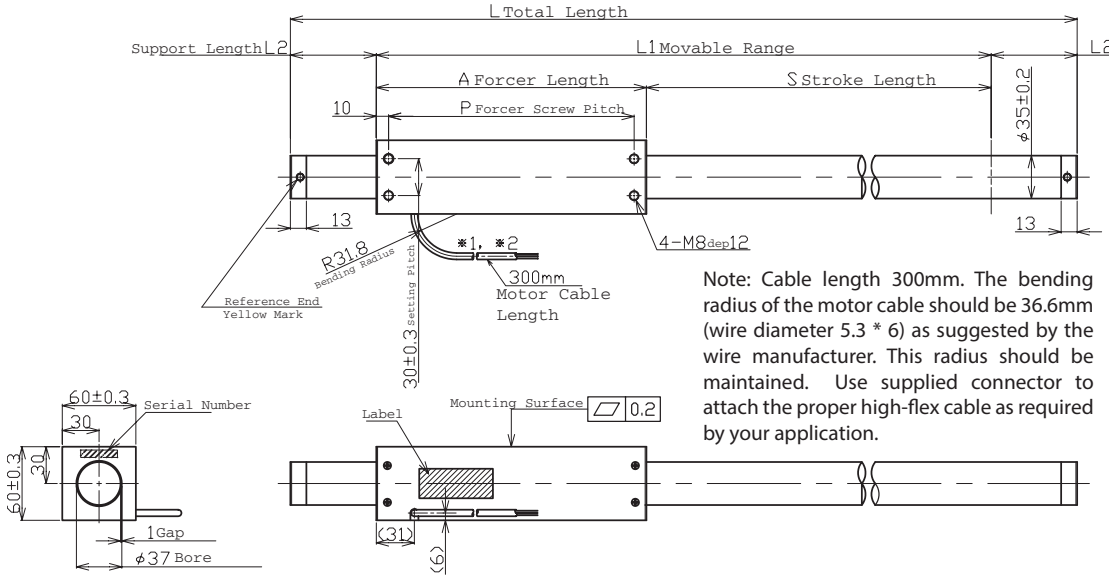


Note: Cable length 300mm. The bending radius of the motor cable should be 36.6mm (wire diameter 5.3 * 6) as suggested by the wire manufacturer. This radius should be maintained. Use supplied connector to attach the proper high-flex cable as required by your application.

Tolerances are as follows:

| Dimension (mm) | Tolerance (mm) |
|---|---|
| 0 - 6 | ±0.1 |
| 7 - 30 | ±0.2 |
| 31 - 120 | ±0.3 |
| 121 - 315 | ±0.5 |
| 316 - 1000 | ±0.8 |
| 1001 - 2000 | ±1.2 |
| 2000 - | ±1.5 |

L = See Shaft Length
L1 = Usable Stroke + A
L2 = See Support Length
A = See Forcer Length
P = See Forcer Screw Pitch

*Unless otherwise specified, dimensions are in mm*

## Hall Effect Specs

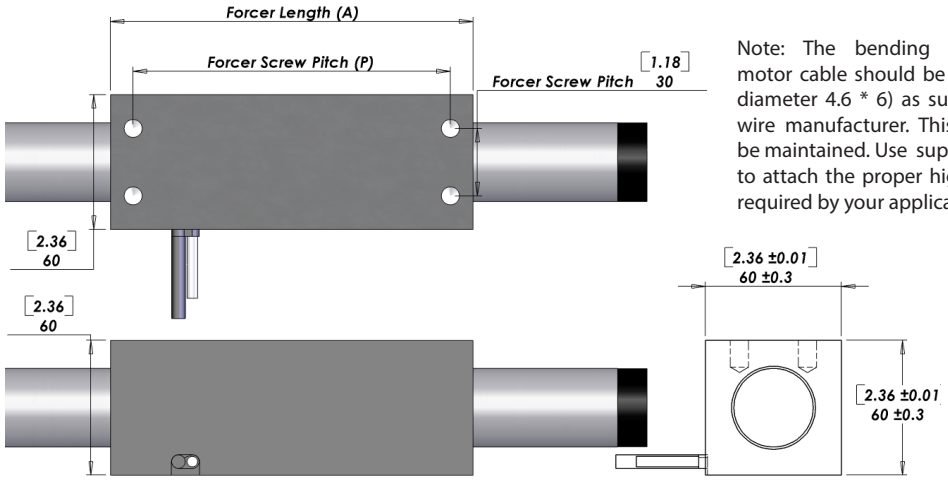


Note: The bending radius of the motor cable should be R36.6mm (wire diameter 4.6 * 6) as suggested by the wire manufacturer. This radius should be maintained. Use supplied connector to attach the proper high flex cable as required by your application.

### Sensor Cable Specs

| | |
|---|---|
| Wire Type | UL 758 |
| Wire AWG | 28 |
| VCC | White/Red |
| GND | White/Black |
| Sensor 1 | Orange/Red |
| Sensor 2 | Orange/Black |
| Sensor 3 | Gray/Red |

The bending radius of the sensor cable should be R27.6mm (wire diameter 6.1 * 6) as suggested by the wire manufacturer. This radius should be maintained. Attach the proper high-flex cable as required by your application.

## Standard Lead Wire

| | |
|---|---|
| Wire Type | UL 2464FA |
| Wire AWG | 20 |
| U Phase | Red |
| V Phase | White |
| W Phase | Black |

300mm lead wire bare leads. The bending radius of the motor cable should be 36.6mm as suggested by the wire manufacturer.

## FGA/CE Option Lead Wire

| | |
|---|---|
| Wire Type | UL 1330 |
| Wire AWG | 20 |
| U Phase | Red |
| V Phase | White |
| W Phase | Black |

| | |
|---|---|
| Ground Wire | CE |
| Wire Type | UL 1330 |
| Wire AWG | 18 |
| Frame Ground | Green/Yellow |

300mm lead wire bare leads. The bending radius of the motor cable should be 41.3mm as suggested by the wire manufacturer. FG type with insulating sheet between coils and case. Meets all requirements of EN60034-1 (1998).

## Forcer Spacing Distance

| Spec | S350T | S350Q |
|---|---|---|
| Forcer Spacing Distance | 20mm | |
| Pole (N/S) Distance | 60mm | |
| Forcer Length | 220mm | 280mm |
| Flip Forcers | No | Yes |

Tandem S350D forcers are possible, but are equivalent to one (1) S350Q forcer and thus are not listed above.

## Shaft Length (L)

| Stroke | S350D | S350T | S350Q |
|---|---|---|---|
| 100 | Stroke is less than the electrical cycle length. Contact Nippon Pulse. | | |
| 150 | 410mm (16.1in) | 470mm (18.5in) | 530mm (20.9in) |
| 200 | 460mm (18.1in) | 520mm (20.5in) | 580mm (22.8in) |
| 250 | 510mm (20.1in) | 570mm (22.4in) | 630mm (24.8in) |
| 300 | 560mm (22in) | 620mm (24.4in) | 680mm (26.8in) |
| 350 | 610mm (24in) | 670mm (26.4in) | 730mm (28.7in) |
| 400 | 660mm (26in) | 720mm (28.3in) | 780mm (30.7in) |
| 450 | 710mm (28in) | 770mm (30.3in) | 830mm (32.7in) |
| 500 | 760mm (29.9in) | 820mm (32.3in) | 880mm (34.6in) |
| 550 | 810mm (31.9in) | 870mm (34.3in) | 930mm (36.6in) |
| 600 | 860mm (33.9in) | 920mm (36.2in) | 980mm (38.6in) |
| 650 | 910mm (35.8in) | 970mm (38.2in) | 1030mm (40.6in) |
| 700 | 960mm (37.8in) | 1020mm (40.2in) | 1080mm (42.5in) |
| 750 | 1010mm (39.8in) | 1070mm (42.1in) | 1130mm (44.5in) |
| 800 | 1100mm (43.3in) | 1160mm (45.7in) | 1220mm (48in) |
| 850 | 1150mm (45.3in) | 1210mm (47.6in) | 1270mm (50in) |
| 900 | 1200mm (47.2in) | 1260mm (49.6in) | 1320mm (52in) |
| 950 | 1250mm (49.2in) | 1310mm (51.6in) | 1370mm (53.9in) |
| 1000 | 1300mm (51.2in) | 1360mm (53.5in) | 1420mm (55.9in) |
| 1050 | 1350mm (53.1in) | 1410mm (55.5in) | 1470mm (57.9in) |
| 1100 | 1400mm (55.1in) | 1460mm (57.5in) | 1520mm (59.8in) |
| 1150 | 1450mm (57.1in) | 1510mm (59.4in) | 1570mm (61.8in) |
| 1200 | 1500mm (59.1in) | 1560mm (61.4in) | 1620mm (63.8in) |
| 1250 | 1550mm (61in) | 1610mm (63.4in) | 1670mm (65.7in) |
| 1300 | 1600mm (63in) | 1660mm (65.4in) | 1720mm (67.7in) |
| 1350 | 1650mm (65in) | 1710mm (67.3in) | 1770mm (69.7in) |
| 1400 | 1700mm (66.9in) | 1760mm (69.3in) | 1820mm (71.7in) |
| 1450 | 1750mm (68.9in) | 1810mm (71.3in) | 1870mm (73.6in) |
| 1500 | 1800mm (70.9in) | 1860mm (73.2in) | 1920mm (75.6in) |
| 1550 | 1910mm (75.2in) | 1970mm (77.6in) | 2030mm (79.9in) |
| 1600 | 1960mm (77.2in) | 2020mm (79.5in) | 2080mm (81.9in) |
| 1650 | 2010mm (79.1in) | 2070mm (81.5in) | 2130mm (83.9in) |
| 1700 | 2060mm (81.1in) | 2120mm (83.5in) | 2180mm (85.8in) |
| 1750 | 2110mm (83.1in) | 2170mm (85.4in) | 2230mm (87.8in) |
| 1800 | 2160mm (85in) | 2220mm (87.4in) | 2280mm (89.8in) |
| 1850 | 2210mm (87in) | 2270mm (89.4in) | 2330mm (91.7in) |
| 1900 | 2260mm (89in) | 2320mm (91.3in) | 2380mm (93.7in) |
| 1950 | 2310mm (90.9in) | 2370mm (93.3in) | 2430mm (95.7in) |
| 2000 | 2360mm (92.9in) | 2420mm (95.3in) | 2480mm (97.6in) |

## Shaft Mass

| Stroke | S350D | S350T | S350Q |
|---|---|---|---|
| 100 | Stroke is less than the electrical cycle length. Contact Nippon Pulse. | | |
| 150 | 2.7kg (6lb) | 3.1kg (6.8lb) | 3.5kg (7.7lb) |
| 200 | 3kg (6.7lb) | 3.4kg (7.6lb) | 3.8kg (8.4lb) |
| 250 | 3.4kg (7.4lb) | 3.8kg (8.3lb) | 4.2kg (9.2lb) |
| 300 | 3.7kg (8.1lb) | 4.1kg (9lb) | 4.5kg (9.9lb) |
| 350 | 4kg (8.9lb) | 4.4kg (9.8lb) | 4.8kg (10.6lb) |
| 400 | 4.4kg (9.6lb) | 4.8kg (10.5lb) | 5.1kg (11.4lb) |
| 450 | 4.7kg (10.3lb) | 5.1kg (11.2lb) | 5.5kg (12.1lb) |
| 500 | 5kg (11.1lb) | 5.4kg (11.9lb) | 5.8kg (12.8lb) |
| 550 | 5.3kg (11.8lb) | 5.7kg (12.7lb) | 6.1kg (13.5lb) |
| 600 | 5.7kg (12.5lb) | 6.1kg (13.4lb) | 6.5kg (14.3lb) |
| 650 | 6kg (13.2lb) | 6.4kg (14.1lb) | 6.8kg (15lb) |
| 700 | 6.3kg (14lb) | 6.7kg (14.8lb) | 7.1kg (15.7lb) |
| 750 | 6.7kg (14.7lb) | 7.1kg (15.6lb) | 7.5kg (16.4lb) |
| 800 | 7.3kg (16lb) | 7.7kg (16.9lb) | 8.1kg (17.8lb) |
| 850 | 7.6kg (16.7lb) | 8kg (17.6lb) | 8.4kg (18.5lb) |
| 900 | 7.9kg (17.5lb) | 8.3kg (18.3lb) | 8.7kg (19.2lb) |
| 950 | 8.3kg (18.2lb) | 8.6kg (19.1lb) | 9kg (19.9lb) |
| 1000 | 8.6kg (18.9lb) | 9kg (19.8lb) | 9.4kg (20.7lb) |
| 1050 | 8.9kg (19.6lb) | 9.3kg (20.5lb) | 9.7kg (21.4lb) |
| 1100 | 9.2kg (20.4lb) | 9.6kg (21.2lb) | 10kg (22.1lb) |
| 1150 | 9.6kg (21.1lb) | 10kg (22lb) | 10.4kg (22.8lb) |
| 1200 | 9.9kg (21.8lb) | 10.3kg (22.7lb) | 10.7kg (23.6lb) |
| 1250 | 10.2kg (22.6lb) | 10.6kg (23.4lb) | 11kg (24.3lb) |
| 1300 | 10.6kg (23.3lb) | 11kg (24.2lb) | 11.4kg (25lb) |
| 1350 | 10.9kg (24lb) | 11.3kg (24.9lb) | 11.7kg (25.8lb) |
| 1400 | 11.2kg (24.7lb) | 11.6kg (25.6lb) | 12kg (26.5lb) |
| 1450 | 11.6kg (25.5lb) | 11.9kg (26.3lb) | 12.3kg (27.2lb) |
| 1500 | 11.9kg (26.2lb) | 12.3kg (27.1lb) | 12.7kg (27.9lb) |
| 1550 | 12.6kg (27.8lb) | 13kg (28.7lb) | 13.4kg (29.5lb) |
| 1600 | 12.9kg (28.5lb) | 13.3kg (29.4lb) | 13.7kg (30.3lb) |
| 1650 | 13.3kg (29.3lb) | 13.7kg (30.1lb) | 14.1kg (31lb) |
| 1700 | 13.6kg (30lb) | 14kg (30.9lb) | 14.4kg (31.7lb) |
| 1750 | 13.9kg (30.7lb) | 14.3kg (31.6lb) | 14.7kg (32.5lb) |
| 1800 | 14.3kg (31.4lb) | 14.7kg (32.3lb) | 15.1kg (33.2lb) |
| 1850 | 14.6kg (32.2lb) | 15kg (33lb) | 15.4kg (33.9lb) |
| 1900 | 14.9kg (32.9lb) | 15.3kg (33.8lb) | 15.7kg (34.6lb) |
| 1950 | 15.2kg (33.6lb) | 15.6kg (34.5lb) | 16kg (35.4lb) |
| 2000 | 15.6kg (34.3lb) | 16kg (35.2lb) | 16.4kg (36.1lb) |

Additional stroke lengths are available (up to 2120mm for S350D, and up to 2060mm for S350T). Contact Nippon Pulse for more information.

## Tandem Forcer



Forcer Spacing Distance

## THM Option

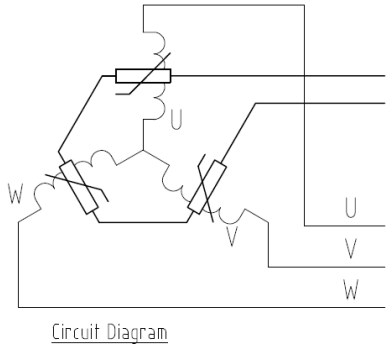


Circuit Diagram

4. Thermistor
PTCSL20T071DBE(Vishay)

## Thermocouple

Thermal sensor
Thermocouple K type (marked each phase name)
Attached to the surface of inside of coil
Length 3000mm

## Connector (Motor Cable)

| | |
|---|---|
| Receptacle Housing | VLR-03V |
| Plug Housing | VLP-03V |
| Retainer | VLS-03V |
| Pin Contact | SVM-61T-P2.0 |
| Socket Contact | SVF-61T-P2.0 |

To be installed by the user.

## Support and Bending

| Stroke | Support Length (L2) | Max. Bending |
|---|---|---|
| 0~750 | 50mm | 0.00mm |
| 751~1000 | 70mm | 0.30mm |
| 1001~1500 | 70mm | 0.90mm |
| 1501~max | 100mm | 1.00mm |

Shaft Diameter (D) - 35mm ±0.2
Total Length (L)=Stroke (S)+Forcer Length (A)+(Support Length (L2)x2)
Stroke lengths available from 100mm to 2500mm. Contact Nippon Pulse for more information.

These motors have not received a CE Declaration of Conformity, and as such are designated FGA.

Note: Metric units guaranteed. Imperial (United States customary) units are calculated.

NPM Nippon Pulse
*Your Partner in Motion Control*

# System Design
## Linear Shaft Motor

The design of the Linear Shaft Motor allows you to replace traditional linear motion systems, such as a standard ball screw, with the Linear Shaft Motor and achieve higher speed and resolution.

To achieve the highest performance with the Linear Shaft Motor system, the entire system structure must be optimized.

Be aware there are various design considerations which are somewhat different from traditional servo system practices. These are the main components needed to make a Linear Shaft Motor system, as well as factors to consider when designing a system.




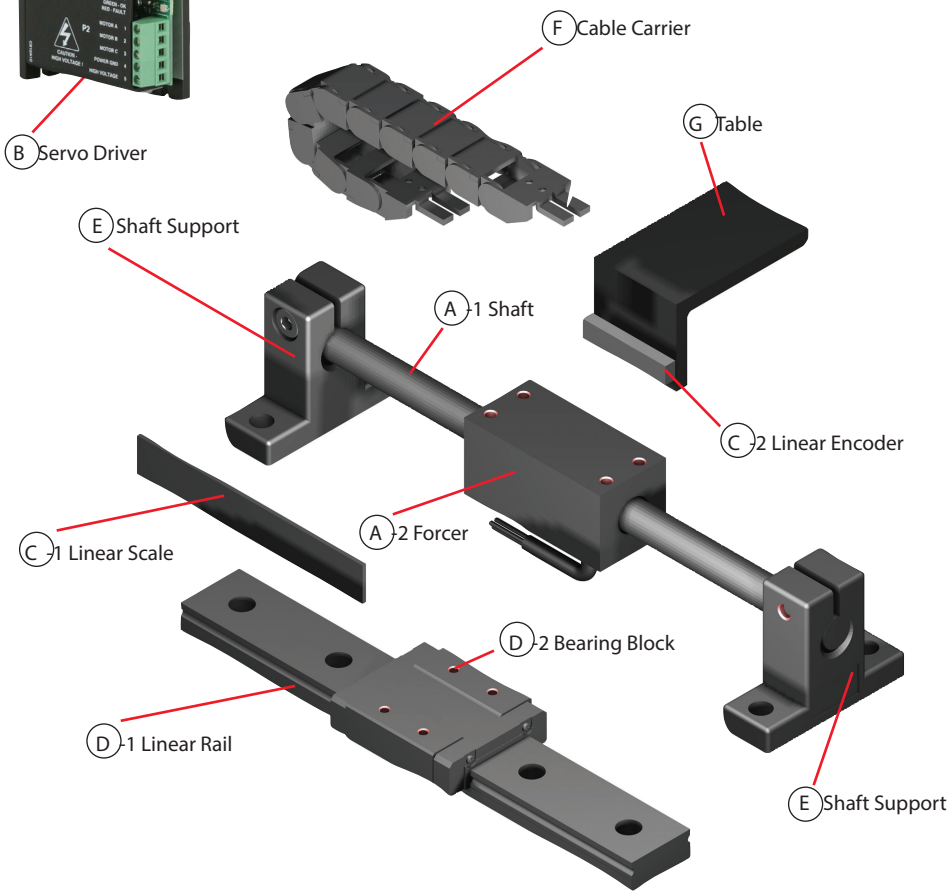


## Steps to putting together a Linear Shaft Motor System

Choose the Linear Shaft Motor based on force and stroke requirements.

↓

Choose the shaft supports based on design and motor specifications.

↓

Choose the linear guide (bearings) based on cost and smoothness (performance) constraints.

↓

Choose the linear encoder to achieve the required position resolution.

↓

Choose the servo driver to match the power requirements of the Linear Shaft Motor.

↓

Choose the OTL, limit switches/other components and assemble the Linear Shaft Motor system.

## Configuring the Linear Shaft Motor

To configure a system using the Linear Shaft Motor, the following peripheral devices are required:

A. Linear Shaft Motor
B. Servo Driver
C. Linear encoder (optical or magnetic)

Item D (Linear Guide) is a necessary part of a system, but consideration must be given to the application, demand specifications, environmental conditions, and which will be moving--the forcer or the shaft.

The other items, E through G, are optional and will need to be selected depending on the application.