Silicon Standard Recovery Diode

V_{RRM} = 1600 V - 2000 V

I_F =300 A

Features

- High Surge Capability
- Types from 1600 V to 2000 V V_{RRM}
- Not ESD Sensitive

DO-9 Package

Note:

1. Standard polarity: Stud is cathode.
2. Reverse polarity (R): Stud is anode.
3. Stud is base.



Maximum ratings, at T_j = 25 °C, unless otherwise specified ("R" devices have leads reversed)

Parameter	Symbol	Conditions	S300Y (R)	S300Z (R)	Unit
Repetitive peak reverse voltage	V_{RRM}		1600	2000	V
RMS reverse voltage	V_{RMS}		1131	1414	V
DC blocking voltage	V_{DC}		1600	2000	V
Continuous forward current	I_F	$T_C \leq 130$ °C	300	300	A
Surge non-repetitive forward current, Half Sine Wave	$I_{F,SM}$	T_C = 25 °C, t_p = 8.3 ms	6850	6850	A
Operating temperature	T_j		-55 to 150	-55 to 150	°C
Storage temperature	T_{stg}		-55 to 150	-55 to 150	°C

Electrical characteristics, at Tj = 25 °C, unless otherwise specified

Parameter	Symbol	Conditions	S300Y (R)	S300Z (R)	Unit
Diode forward voltage	V_F	I_F = 300 A, T_j = 25 °C	1.2	1.2	V
Reverse current	I_R	V_R = 1600 V, T_j = 25 °C	10	10	µA
		V_R = 1600 V, T_j = 175 °C	12	12	mA
Thermal characteristics					
Thermal resistance, junction - case	R_{thJC}		0.16	0.16	°C/W

Figure.1-Typical Forward Characteristics

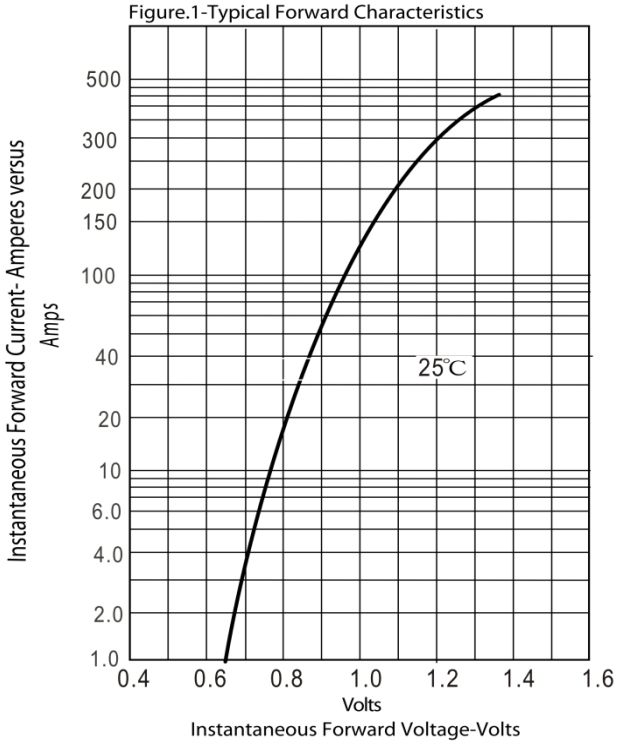

Figur.2-Forward Derating Curve

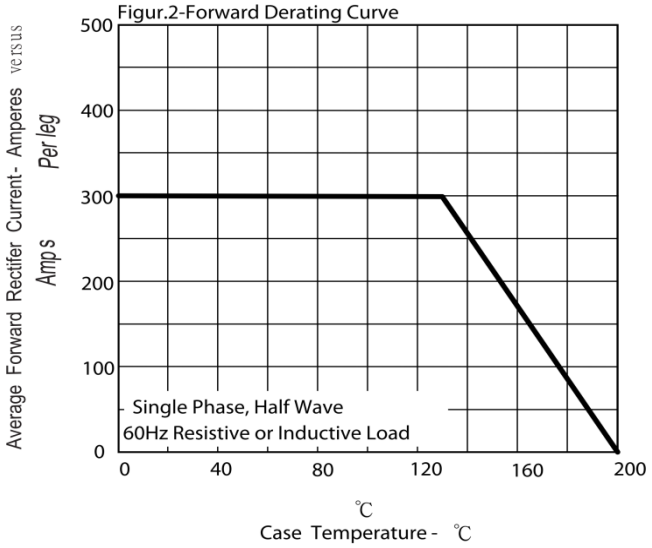

Figure.3-Peak Forward Surge Current

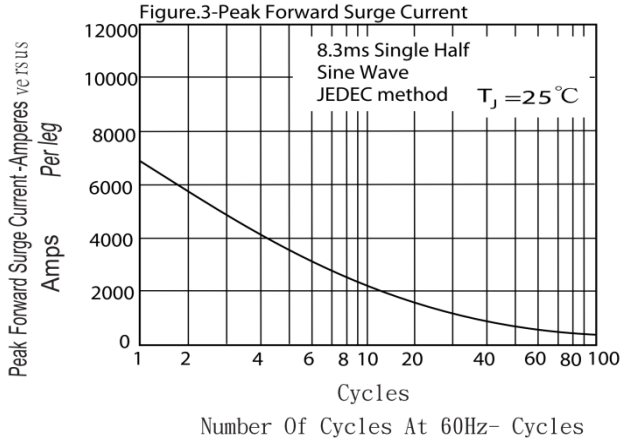

Figur.4-Typical Reverse Characteristics

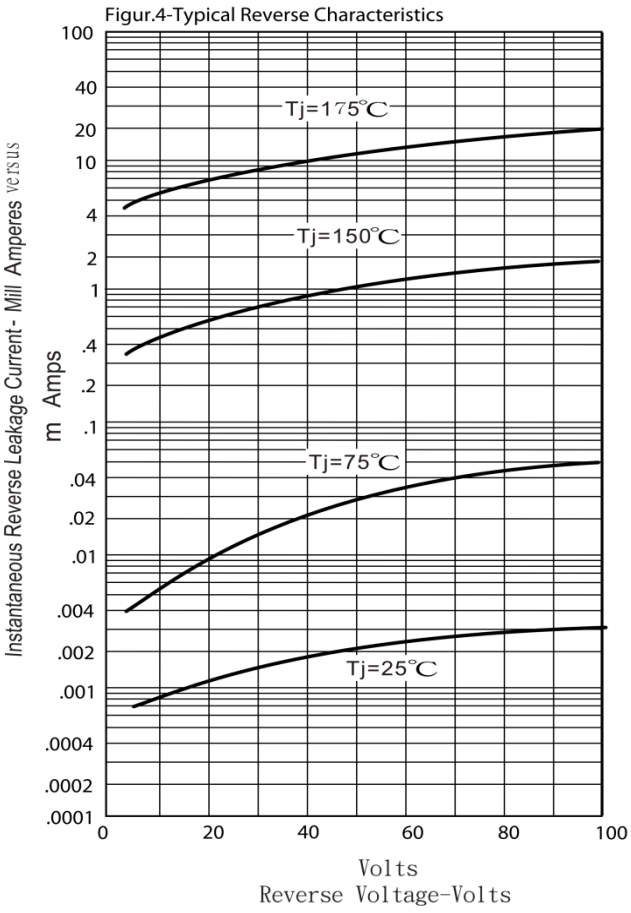

Package dimensions and terminal configuration

Product is marked with part number and terminal configuration.

DO-9 (DO--205AB)

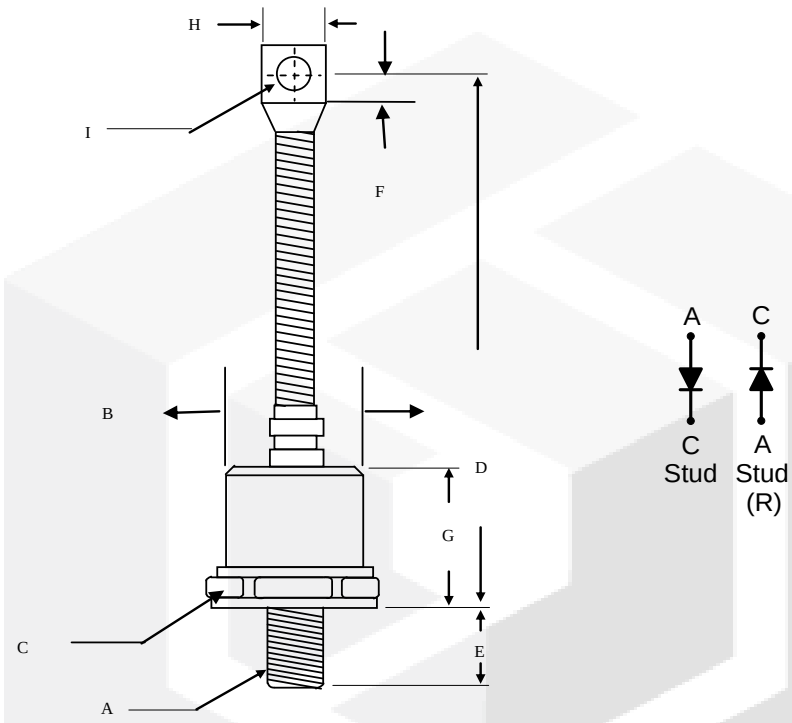

	Inches		Millimeters	
	Min	Max	Min	Max
A	3/4 - 16 UNF			
B	-----	1.10	-----	27.94
C	1.24	1.25	31.5	31.90
D	-----	7.48	-----	190.0
E	0.78	0.828	19.60	21.03
F	0.470	0.530	11.94	13.46
G	-----	1.122	-----	28.5
H	-----	0.787	-----	20.0
I	0.330	0.350	8.38	8.89