DASH NO. RANGE	"D" DIA. RANGE	"E" DIMENSION	"R" RADIUS	"T" GAUGE
-2 THRU -16	1/8" TO 1"	"D"/2 + .514	.06	.031
-17 THRU -64	1-1/16" TO 4"	"D"/2 + .534	.11	.050

REV.	CHANGE	DATE	BY	CHK'D	APPR
V	SEE DRAWING CHANGE RECORD ON FILE.	09/25/13	HAD	KWE	HAD

S230



MATERIAL & FINISH CODES:

METAL:
- "NO CODE" 1008/1020 LOW CARBON STEEL PER ASTM A 1008, ASTM A 109, QQ-S-698
  FINISH: ZINC PLATE BRIGHT PER ASTM B 633, Fe/Zn 8, TY. III [1]
- "D" 2024-T42 ALUMINUM ALLOY PER AMS-QQ-A-250/5
  FINISH: NONE
- "DC" 2024-T42 ALUMINUM ALLOY PER AMS-QQ-A-250/5
  FINISH: CHEMICAL FILM GOLD PER MIL-DTL-5541, TY. 1, CL. 1A
- "C" 304 STAINLESS STEEL PER AMS 5513
- "LC" 316 STAINLESS STEEL PER AMS 5524
- "SS" 321 STAINLESS STEEL PER AMS 5510
  FINISH: PASSIVATE PER AMS 2700, METHOD 1, TY. 6, CL. 1

CUSHION:
- "F" NITRILE BUTADIENE PER MIL-C-85052/1
  COLOR: YELLOW, SHAPES: A, WEDGE AVAILABLE
- "G" GENERAL PURPOSE EPDM PER SAE J200 M3 BA 710 C12
  COLOR: BLACK, SHAPES: A & B
- "H" GENERAL PURPOSE SILICONE PER AMS 3303 WITH 100 PSI MIN. TEAR
  COLOR: RED/ORANGE, SHAPES: A & B
- "HL" GENERAL PURPOSE SILICONE PER AMS 3303 & MIL-C-8603 WITH 100 PSI MIN. TEAR
  COLOR: NATURAL WHITE, SHAPES: A, WEDGE AVAILABLE
- "J" FLUOROSILICONE PER MIL-R-25988, TY. II, CL. 1, GRADE 60
  COLOR: SOLID BLUE, SHAPES: A & B, WEDGE AVAILABLE
- "N" GENERAL PURPOSE NEOPRENE PER AMS 3209
  COLOR: BLACK, SHAPES: A & B, WEDGE AVAILABLE
- "P" PTFE IMPREGNATED PBI POLYMIDE - GLASS BLEND FABRIC PER BPS-C-155 & AMS 3677
  COLOR: BROWN, SHAPES: A
- "T" TEFLON SKIVED PER AMS 3652
  COLOR: WHITE, SHAPES: A, WEDGE AVAILABLE
- "X" TEFLON ANTI-SLIP PER AMS 3652
  FINISH: SODIUM TREAT PER AMS 2491
  COLOR: BROWN, SHAPES: A, WEDGE AVAILABLE

EXAMPLE OF PART CALLOUT:

ANODIZED 1" DIA., REINFORCED ALUM. CLAMP W/WEDGED TEFLON

S230 W D B T R 16 Z
- Z — ANODIZE CLEAR PER MIL-A-8625, TY. II, CL. 1 (OMIT WHEN NOT APPLICABLE)
- 16 — DIA "D" IN 1/16" INCREMENTS
- R — RECTANGULAR CUSHION (OMIT WHEN NOT APPLICABLE)
- T — CUSHION CODE
- B — REINFORCED (OMIT WHEN NOT DESIRED) [2]
- D — METAL CODE (OMIT FOR "NO CODE")
- W — WEDGE CODE (OMIT WHEN NOT APPLICABLE)
- S230 — BASIC DRAWING NUMBER

NOTES:

[1] OPTIONAL FINISH: CADMIUM PLATE BRIGHT PER AMS-QQ-P-416, TY. I, CL. 2
[2] REINFORCED CORNERS AND BEADED JOGGLE PER DS1010 WHEN SPECIFIED.
[3] FOR SHAPE (B) STYLE CUSHIONS (BOX), PARTS SHALL BE PACKAGE IDENTIFIED IN MULTIPLES OF 10, NOT TO EXCEED 100.
4) CLAMPS FURNISHED IN THE NORMAL OPEN (SPRINGBACK) CONDITION.
5) INSPECT PER MIL-C-8603 CLOSURE TEST.

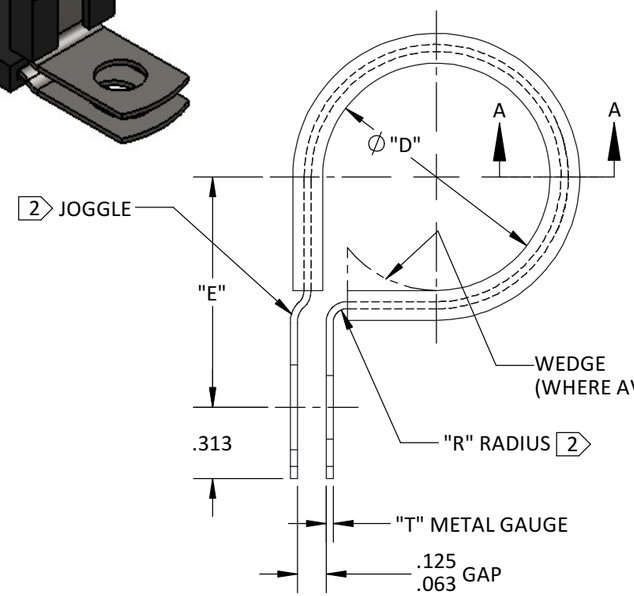

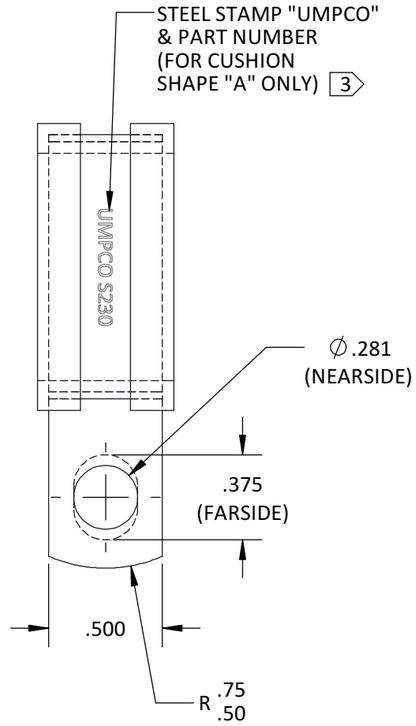

SECTION A-A
(CUSHION STYLE)

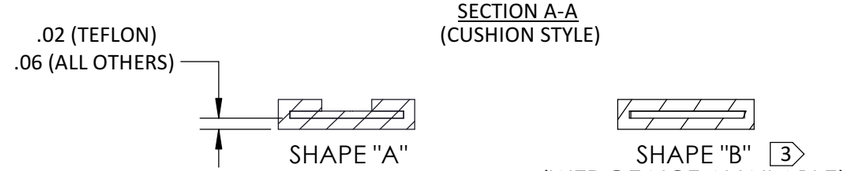

SHEET 1 OF 1

REFERENCES:			
LIMITS ON DIMENSIONS UNLESS OTHERWISE SPECIFIED:	ANGULAR: X ± 5°	DECIMAL: .XX ± .03	.XXX ± .015
GENERAL MACHINE FINISHES EXCEPT AS NOTED: INTERPRET GEOMETRIC TOLERANCING PER: ASME-Y14.5M	PROPRIETARY AND CONFIDENTIAL THE INFORMATION CONTAINED IN THIS DRAWING IS THE SOLE PROPERTY OF UMPCO, INC. ANY REPRODUCTION IN PART OR AS A WHOLE WITHOUT THE WRITTEN PERMISSION OF UMPCO, INC IS PROHIBITED.		
REMOVE ALL BURRS AND BREAK SHARP EDGES .010 MAX	ACT. WGHT. -	CALC. WGHT. -	

UMPCO, INC.
7100 LAMPSON AVE.
P.O. BOX 5158
GARDEN GROVE, CA. 92846

FSCM/CAGE CODE No. 18076

KEL	KEL	EHK
03/01/65	03/01/65	03/01/65
DRAWN	CHECKED	ENGR

CLAMP, LOOP, SUPPORT, CUSHIONED, 1/4" MOUNTING HOLE
PART AND/OR ASSEMBLY DESCRIPTION

SIZE B | SCALE: NONE

S230
PRINT NUMBER