Silicon Power Rectifier
S/R21 Series

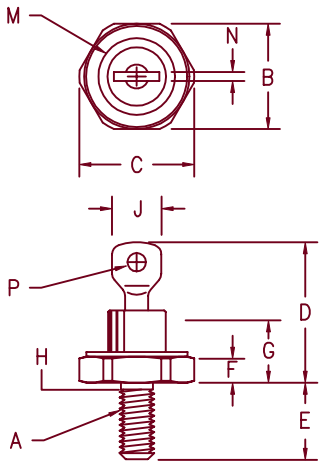

Notes:
1. 10–32 UNF3A
2. Full threads within 2 1/2 threads
3. Standard Polarity: Stud is Cathode
   Reverse Polarity: Stud is Anode

Dim.	Inches		Millimeter		
	Minimum	Maximum	Minimum	Maximum	Notes
A	---	---	---	---	1
B	.424	.437	10.77	11.10	
C	---	.505	---	12.82	
D	.600	.800	15.24	20.32	
E	.422	.453	10.72	11.50	
F	.075	.175	1.91	4.44	
G	---	.405	---	10.29	
H	.163	.189	4.15	4.80	2
J	---	.310	---	7.87	
M	---	.350	---	8.89	Dia
N	.020	.065	.510	1.65	
P	.070	.100	1.78	2.54	Dia

DO203AA (DO4)

Microsemi Catalog Number		JEDEC Numbers		Peak Reverse Voltage
	1N2246,A	1N2598		50V
	1N2248,A			100V
				150V
*S2120	1N2250,A	1N2784	1N4506	200V
	1N2252,A			300V
*S2140	1N2254,A	1N2785	1N4507	400V
	1N2256,A			500V
*S2160	1N2258,A		1N4508	600V
		1N3670,A		700V
*S2180	1N2260,A	1N3671,A	1N4509	800V
		1N3672,A		900V
*S21100	1N2262,A	1N3673, A	1N4510	1000V
*S21120	1N2264,A		1N4511	1200V
*S21140		1N5331,A		1400V
*S21160				1600V

*Change S to R in part number for Reverse Polarity
For 1N types, use an R suffix for Reverse Polarity

- Glass Passivated Die
- Low Forward Voltage
- 250A Surge Rating
- Glass to metal seal construction
- V_{RRM} to 1600V

Electrical Characteristics

Average forward current	$I_{F(AV)}$ 22 Amps	T_C = 134°C, half sine wave, $R_{\theta JC}$ = 2.5°C/W
Maximum surge current	I_{FSM} 250 Amps	8.3ms, half sine, T_J = 200°C
Max I^2t for fusing	I^2t 260 A^2s	
Max peak forward voltage	V_{FM} 1.2 Volts	I_{FM} = 30A; T_J = 25°C *
Max peak reverse current	I_{RM} 10 µA	V_{RRM}, T_J = 25°C
Max peak reverse current	I_{RM} 1.0 mA	V_{RRM}, T_J = 150°C
Max Recommended Operating Frequency	10kHz	

*Pulse test: Pulse width 300 µsec. Duty cycle 2%

Thermal and Mechanical Characteristics

Storage temperature range	T_{STG}	–65°C to 200°C
Operating junction temp range	T_J	–65°C to 200°C
Maximum thermal resistance	$R_{\theta JC}$	2.5°C/W Junction to Case
Mounting torque		25–30 inch pounds
Weight		.16 ounces (5.0 grams) typical

11–16–00 Rev. 1

COLORADO Microsemi
800 Hoyt Street
Broomfield, CO. 80020
PH: (303) 469–2161
FAX: (303) 466–3775
www.microsemi.com

S/R21

Figure 1
Maximum Forward Characteristics

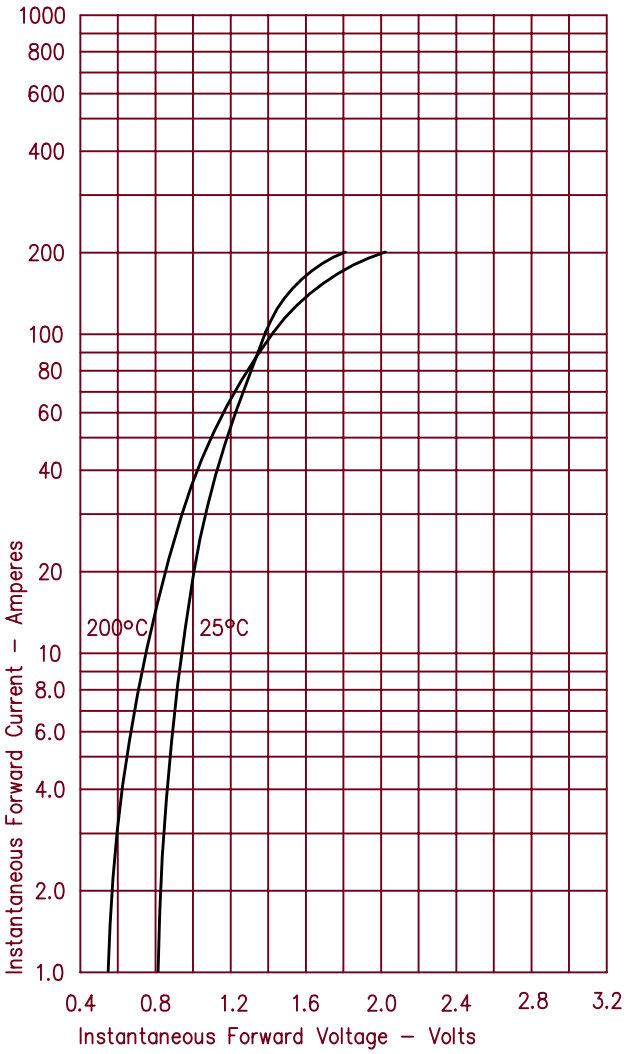

Figure 2
Typical Reverse Characteristics

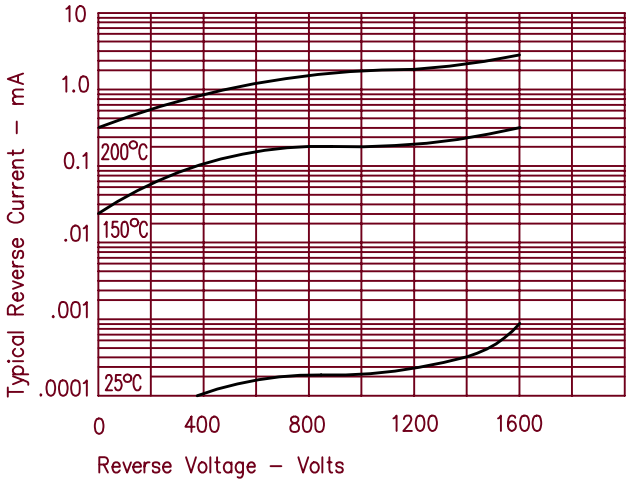

Figure 3
Forward Current Derating

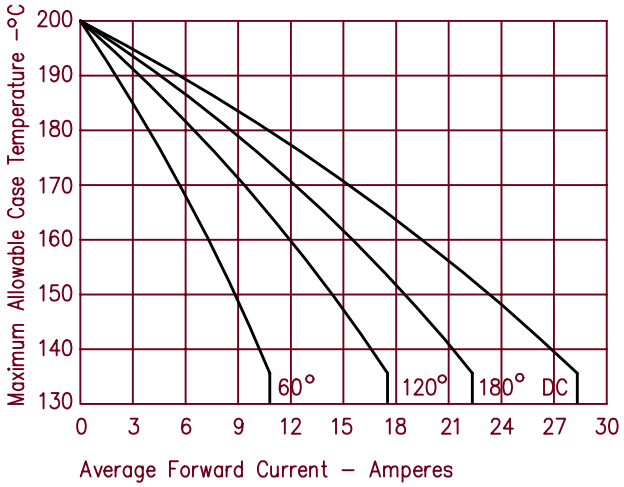

Figure 4
Maximum Forward Power Dissipation

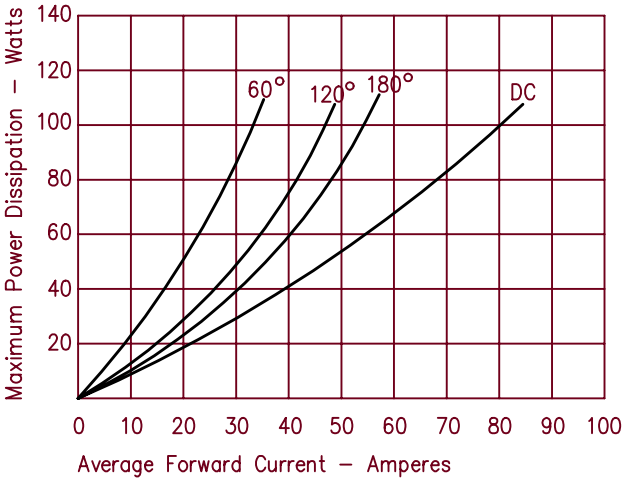

Figure 5
Transient Thermal Impedance

