S-1315 Series

5.5 V INPUT, 200 mA, OUTPUT CAPACITOR-LESS VOLTAGE REGULATOR

www.ablic.com

© ABLIC Inc., 2011-2019

Rev.1.4_00

The S-1315 Series, developed by using the CMOS technology, is a positive voltage regulator IC of 200 mA output current which has low dropout voltage, high-accuracy output voltage and low current consumption. The S-1315 Series enables high density mounting due to output capacitor-less.
The current consumption is extremely low as 7 µA typ., and even without an output capacitor, it realizes high-speed response.
It also has high-accuracy output voltage of ±1.0%.

■ Features

- Output voltage: 1.0 V to 4.2 V, selectable in 0.05 V step
- Input voltage: 1.4 V to 5.5 V
- Output voltage accuracy: ±1.0% (1.0 V to 1.45 V output product: ±15 mV)
- Dropout voltage: 224 mV typ. (3.0 V output product, I_{OUT} = 200 mA)
- Current consumption: During operation: 7 µA typ., 13 µA max.
  During power-off: 0.1 µA typ., 1.0 µA max.
- Output current: Possible to output 200 mA ($V_{IN} \geq V_{OUT(S)} + 1.0$ V)*1
- Input and output capacitors: A ceramic capacitor of 0.1 µF or more can be used for the input capacitor.
  Output capacitor is unnecessary, or a ceramic capacitor of 10 µF or less can be used.
- Ripple rejection: 65 dB typ. (1.0 V output product, f = 1.0 kHz)
  60 dB typ. (2.8 V output product, f = 1.0 kHz)
- Built-in overcurrent protection circuit: Limits overcurrent of output transistor.
- Built-in ON / OFF circuit: Ensures long battery life.
  Discharge shunt function "available" / "unavailable" is selectable.
  Pull-down function "available" / "unavailable" is selectable.
- Operation temperature range: Ta = –40°C to +85°C
- Lead-free (Sn 100%), halogen-free

***1.** Attention should be paid to the power dissipation of the package when the output current is large.

■ Applications

- Constant-voltage power supply for battery-powered device
- Constant-voltage power supply for communication device
- Constant-voltage power supply for mobile phone
- Constant-voltage power supply for module

■ Packages

- SOT-23-5
- HSNT-6 (1212)

■ Block Diagrams

1. S-1315 Series A type

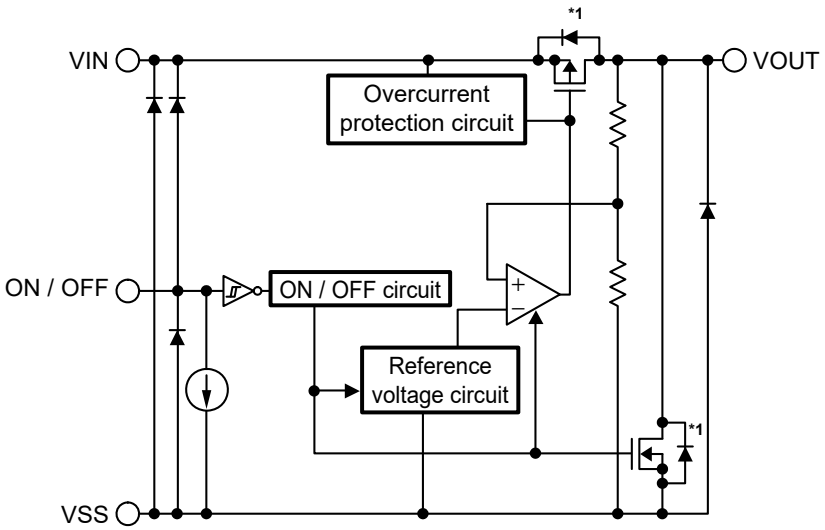

Function	Status
ON / OFF logic	Active "H"
Discharge shunt function	Available
Constant current source pull-down	Available

***1.** Parasitic diode

Figure 1

2. S-1315 Series B type

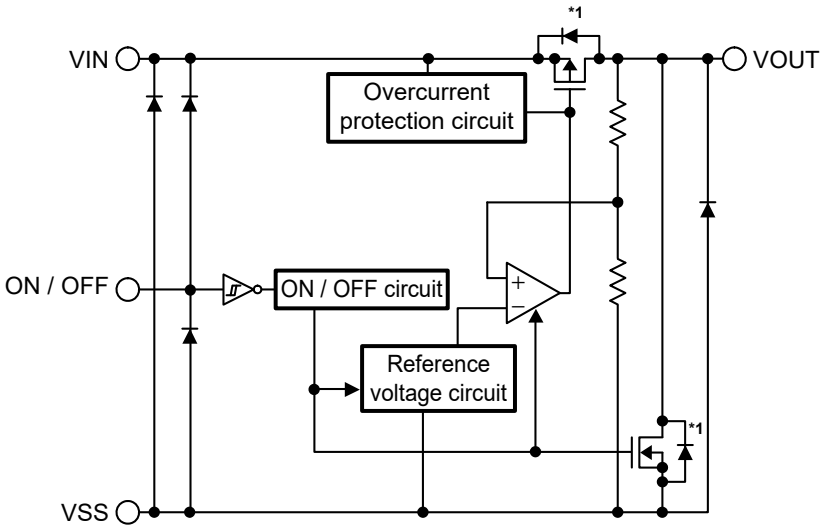

Function	Status
ON / OFF logic	Active "H"
Discharge shunt function	Available
Constant current source pull-down	Unavailable

***1.** Parasitic diode

Figure 2

3. S-1315 Series C type

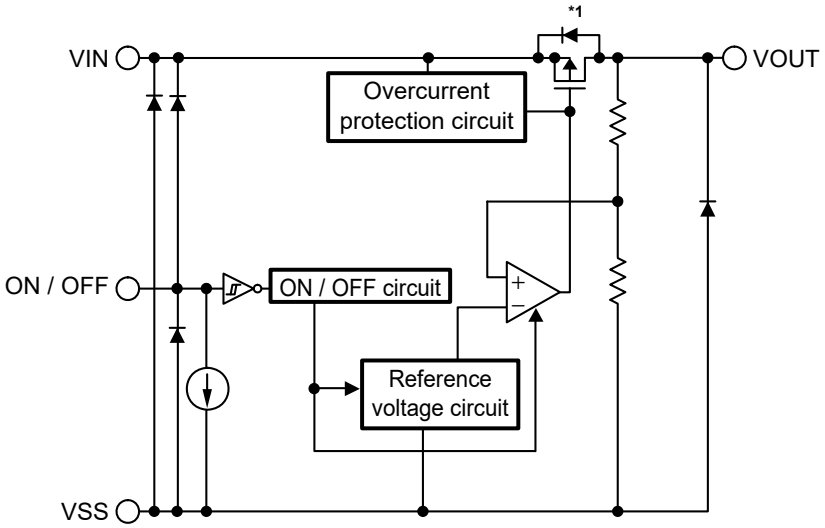

Function	Status
ON / OFF logic	Active "H"
Discharge shunt function	Unavailable
Constant current source pull-down	Available

***1.** Parasitic diode

Figure 3

4. S-1315 Series D type

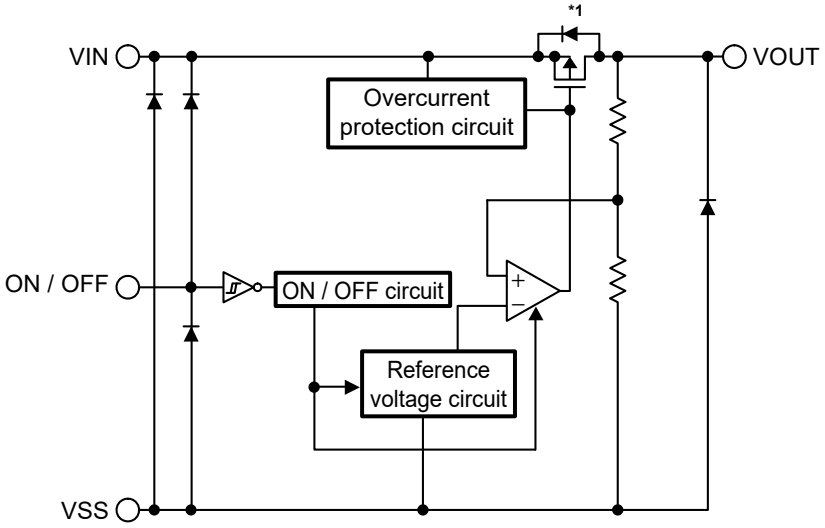

Function	Status
ON / OFF logic	Active "H"
Discharge shunt function	Unavailable
Constant current source pull-down	Unavailable

***1.** Parasitic diode

Figure 4

■ Product Name Structure

Users can select the product type, output voltage, and package type for the S-1315 Series. Refer to "**1. Product name**" regarding the contents of product name, "**2. Function list of product types**" regarding the product type, "**3. Packages**" regarding the package drawings, "**4. Product name lists**" regarding details of the product name.

1. Product name

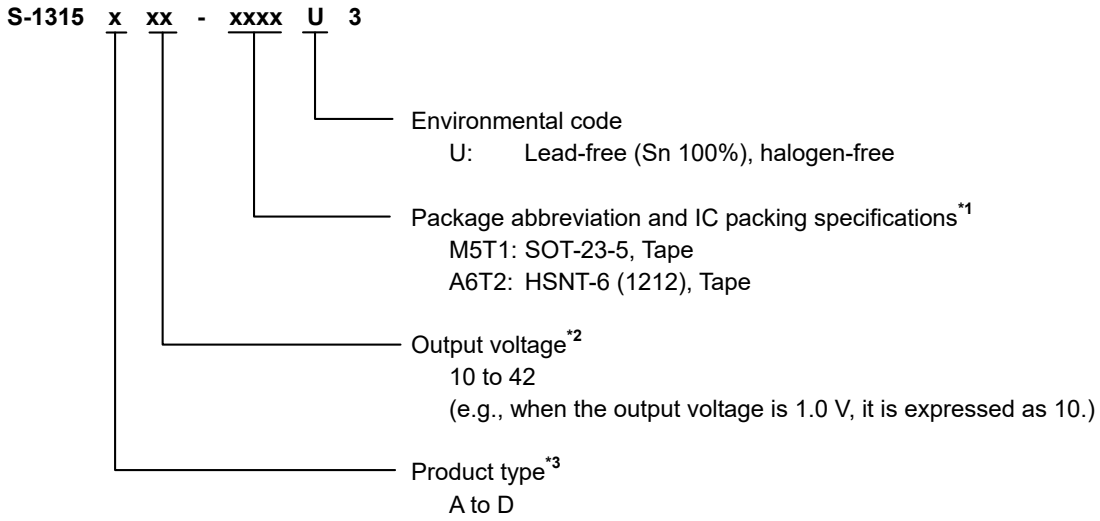

***1.** Refer to the tape drawing.
***2.** If you request the product which has 0.05 V step, contact our sales office.
***3.** Refer to "**2. Function list of product types**".

2. Function list of product types

Table 1

Product Type	ON / OFF Logic	Discharge Shunt Function	Constant Current Source Pull-down
A	Active "H"	Available	Available
B	Active "H"	Available	Unavailable
C	Active "H"	Unavailable	Available
D	Active "H"	Unavailable	Unavailable

3. Packages

Table 2 Package Drawing Codes

Package Name	Dimension	Tape	Reel	Land
SOT-23-5	MP005-A-P-SD	MP005-A-C-SD	MP005-A-R-SD	–
HSNT-6 (1212)	PM006-A-P-SD	PM006-A-C-SD	PM006-A-R-SD	PM006-A-L-SD

4. Product name lists

4. 1 S-1315 Series A type

ON / OFF logic: Active "H"
Discharge shunt function: Available Constant current source pull-down: Available

Table 3

Output Voltage	SOT-23-5	HSNT-6 (1212)
1.0 V ± 15 mV	S-1315A10-M5T1U3	S-1315A10-A6T2U3
1.1 V ± 15 mV	S-1315A11-M5T1U3	S-1315A11-A6T2U3
1.2 V ± 15 mV	S-1315A12-M5T1U3	S-1315A12-A6T2U3
1.3 V ± 15 mV	S-1315A13-M5T1U3	S-1315A13-A6T2U3
1.4 V ± 15 mV	S-1315A14-M5T1U3	S-1315A14-A6T2U3
1.5 V ± 1.0%	S-1315A15-M5T1U3	S-1315A15-A6T2U3
1.6 V ± 1.0%	S-1315A16-M5T1U3	S-1315A16-A6T2U3
1.7 V ± 1.0%	S-1315A17-M5T1U3	S-1315A17-A6T2U3
1.8 V ± 1.0%	S-1315A18-M5T1U3	S-1315A18-A6T2U3
1.85 V ± 1.0%	S-1315A1J-M5T1U3	S-1315A1J-A6T2U3
1.9 V ± 1.0%	S-1315A19-M5T1U3	S-1315A19-A6T2U3
2.0 V ± 1.0%	S-1315A20-M5T1U3	S-1315A20-A6T2U3
2.1 V ± 1.0%	S-1315A21-M5T1U3	S-1315A21-A6T2U3
2.2 V ± 1.0%	S-1315A22-M5T1U3	S-1315A22-A6T2U3
2.3 V ± 1.0%	S-1315A23-M5T1U3	S-1315A23-A6T2U3
2.4 V ± 1.0%	S-1315A24-M5T1U3	S-1315A24-A6T2U3
2.5 V ± 1.0%	S-1315A25-M5T1U3	S-1315A25-A6T2U3
2.6 V ± 1.0%	S-1315A26-M5T1U3	S-1315A26-A6T2U3
2.7 V ± 1.0%	S-1315A27-M5T1U3	S-1315A27-A6T2U3
2.8 V ± 1.0%	S-1315A28-M5T1U3	S-1315A28-A6T2U3
2.85 V ± 1.0%	S-1315A2J-M5T1U3	S-1315A2J-A6T2U3
2.9 V ± 1.0%	S-1315A29-M5T1U3	S-1315A29-A6T2U3
3.0 V ± 1.0%	S-1315A30-M5T1U3	S-1315A30-A6T2U3
3.1 V ± 1.0%	S-1315A31-M5T1U3	S-1315A31-A6T2U3
3.2 V ± 1.0%	S-1315A32-M5T1U3	S-1315A32-A6T2U3
3.3 V ± 1.0%	S-1315A33-M5T1U3	S-1315A33-A6T2U3
3.4 V ± 1.0%	S-1315A34-M5T1U3	S-1315A34-A6T2U3
3.5 V ± 1.0%	S-1315A35-M5T1U3	S-1315A35-A6T2U3
3.6V ± 1.0%	S-1315A36-M5T1U3	S-1315A36-A6T2U3
3.7V ± 1.0%	S-1315A37-M5T1U3	S-1315A37-A6T2U3
3.8V ± 1.0%	S-1315A38-M5T1U3	S-1315A38-A6T2U3
3.9V ± 1.0%	S-1315A39-M5T1U3	S-1315A39-A6T2U3
4.0 V ± 1.0%	S-1315A40-M5T1U3	S-1315A40-A6T2U3
4.1 V ± 1.0%	S-1315A41-M5T1U3	S-1315A41-A6T2U3
4.2 V ± 1.0%	S-1315A42-M5T1U3	S-1315A42-A6T2U3

Remark Please contact our sales office for products other than the above.

4. 2 S-1315 Series B type

ON / OFF logic: Active "H"
Discharge shunt function: Available Constant current source pull-down: Unavailable

Table 4

Output Voltage	SOT-23-5	HSNT-6 (1212)
1.0 V ± 15 mV	S-1315B10-M5T1U3	S-1315B10-A6T2U3
1.1 V ± 15 mV	S-1315B11-M5T1U3	S-1315B11-A6T2U3
1.2 V ± 15 mV	S-1315B12-M5T1U3	S-1315B12-A6T2U3
1.3 V ± 15 mV	S-1315B13-M5T1U3	S-1315B13-A6T2U3
1.4 V ± 15 mV	S-1315B14-M5T1U3	S-1315B14-A6T2U3
1.5 V ± 1.0%	S-1315B15-M5T1U3	S-1315B15-A6T2U3
1.6 V ± 1.0%	S-1315B16-M5T1U3	S-1315B16-A6T2U3
1.7 V ± 1.0%	S-1315B17-M5T1U3	S-1315B17-A6T2U3
1.8 V ± 1.0%	S-1315B18-M5T1U3	S-1315B18-A6T2U3
1.85 V ± 1.0%	S-1315B1J-M5T1U3	S-1315B1J-A6T2U3
1.9 V ± 1.0%	S-1315B19-M5T1U3	S-1315B19-A6T2U3
2.0 V ± 1.0%	S-1315B20-M5T1U3	S-1315B20-A6T2U3
2.1 V ± 1.0%	S-1315B21-M5T1U3	S-1315B21-A6T2U3
2.2 V ± 1.0%	S-1315B22-M5T1U3	S-1315B22-A6T2U3
2.3 V ± 1.0%	S-1315B23-M5T1U3	S-1315B23-A6T2U3
2.4 V ± 1.0%	S-1315B24-M5T1U3	S-1315B24-A6T2U3
2.5 V ± 1.0%	S-1315B25-M5T1U3	S-1315B25-A6T2U3
2.6 V ± 1.0%	S-1315B26-M5T1U3	S-1315B26-A6T2U3
2.7 V ± 1.0%	S-1315B27-M5T1U3	S-1315B27-A6T2U3
2.8 V ± 1.0%	S-1315B28-M5T1U3	S-1315B28-A6T2U3
2.85 V ± 1.0%	S-1315B2J-M5T1U3	S-1315B2J-A6T2U3
2.9 V ± 1.0%	S-1315B29-M5T1U3	S-1315B29-A6T2U3
3.0 V ± 1.0%	S-1315B30-M5T1U3	S-1315B30-A6T2U3
3.1 V ± 1.0%	S-1315B31-M5T1U3	S-1315B31-A6T2U3
3.2 V ± 1.0%	S-1315B32-M5T1U3	S-1315B32-A6T2U3
3.3 V ± 1.0%	S-1315B33-M5T1U3	S-1315B33-A6T2U3
3.4 V ± 1.0%	S-1315B34-M5T1U3	S-1315B34-A6T2U3
3.5 V ± 1.0%	S-1315B35-M5T1U3	S-1315B35-A6T2U3
3.6 V ± 1.0%	S-1315B36-M5T1U3	S-1315B36-A6T2U3
3.7 V ± 1.0%	S-1315B37-M5T1U3	S-1315B37-A6T2U3
3.8 V ± 1.0%	S-1315B38-M5T1U3	S-1315B38-A6T2U3
3.9 V ± 1.0%	S-1315B39-M5T1U3	S-1315B39-A6T2U3
4.0 V ± 1.0%	S-1315B40-M5T1U3	S-1315B40-A6T2U3
4.1 V ± 1.0%	S-1315B41-M5T1U3	S-1315B41-A6T2U3
4.2 V ± 1.0%	S-1315B42-M5T1U3	S-1315B42-A6T2U3

Remark Please contact our sales office for products other than the above.

4. 3 S-1315 Series C type

ON / OFF logic: Active "H"
Discharge shunt function: Unavailable Constant current source pull-down: Available

Table 5

Output Voltage	SOT-23-5	HSNT-6 (1212)
1.0 V ± 15 mV	S-1315C10-M5T1U3	S-1315C10-A6T2U3
1.1 V ± 15 mV	S-1315C11-M5T1U3	S-1315C11-A6T2U3
1.2 V ± 15 mV	S-1315C12-M5T1U3	S-1315C12-A6T2U3
1.3 V ± 15 mV	S-1315C13-M5T1U3	S-1315C13-A6T2U3
1.4 V ± 15 mV	S-1315C14-M5T1U3	S-1315C14-A6T2U3
1.5 V ± 1.0%	S-1315C15-M5T1U3	S-1315C15-A6T2U3
1.6 V ± 1.0%	S-1315C16-M5T1U3	S-1315C16-A6T2U3
1.7 V ± 1.0%	S-1315C17-M5T1U3	S-1315C17-A6T2U3
1.8 V ± 1.0%	S-1315C18-M5T1U3	S-1315C18-A6T2U3
1.85 V ± 1.0%	S-1315C1J-M5T1U3	S-1315C1J-A6T2U3
1.9 V ± 1.0%	S-1315C19-M5T1U3	S-1315C19-A6T2U3
2.0 V ± 1.0%	S-1315C20-M5T1U3	S-1315C20-A6T2U3
2.1 V ± 1.0%	S-1315C21-M5T1U3	S-1315C21-A6T2U3
2.2 V ± 1.0%	S-1315C22-M5T1U3	S-1315C22-A6T2U3
2.3 V ± 1.0%	S-1315C23-M5T1U3	S-1315C23-A6T2U3
2.4 V ± 1.0%	S-1315C24-M5T1U3	S-1315C24-A6T2U3
2.5 V ± 1.0%	S-1315C25-M5T1U3	S-1315C25-A6T2U3
2.6 V ± 1.0%	S-1315C26-M5T1U3	S-1315C26-A6T2U3
2.7 V ± 1.0%	S-1315C27-M5T1U3	S-1315C27-A6T2U3
2.8 V ± 1.0%	S-1315C28-M5T1U3	S-1315C28-A6T2U3
2.85 V ± 1.0%	S-1315C2J-M5T1U3	S-1315C2J-A6T2U3
2.9 V ± 1.0%	S-1315C29-M5T1U3	S-1315C29-A6T2U3
3.0 V ± 1.0%	S-1315C30-M5T1U3	S-1315C30-A6T2U3
3.1 V ± 1.0%	S-1315C31-M5T1U3	S-1315C31-A6T2U3
3.2 V ± 1.0%	S-1315C32-M5T1U3	S-1315C32-A6T2U3
3.3 V ± 1.0%	S-1315C33-M5T1U3	S-1315C33-A6T2U3
3.4 V ± 1.0%	S-1315C34-M5T1U3	S-1315C34-A6T2U3
3.5 V ± 1.0%	S-1315C35-M5T1U3	S-1315C35-A6T2U3
3.6 V ± 1.0%	S-1315C36-M5T1U3	S-1315C36-A6T2U3
3.7 V ± 1.0%	S-1315C37-M5T1U3	S-1315C37-A6T2U3
3.8 V ± 1.0%	S-1315C38-M5T1U3	S-1315C38-A6T2U3
3.9 V ± 1.0%	S-1315C39-M5T1U3	S-1315C39-A6T2U3
4.0 V ± 1.0%	S-1315C40-M5T1U3	S-1315C40-A6T2U3
4.1 V ± 1.0%	S-1315C41-M5T1U3	S-1315C41-A6T2U3
4.2 V ± 1.0%	S-1315C42-M5T1U3	S-1315C42-A6T2U3

Remark Please contact our sales office for products other than the above.

4. 4 S-1315 Series D type

ON / OFF logic: Active "H"
Discharge shunt function: Unavailable Constant current source pull-down: Unavailable

Table 6

Output Voltage	SOT-23-5	HSNT-6 (1212)
1.0 V ± 15 mV	S-1315D10-M5T1U3	S-1315D10-A6T2U3
1.1 V ± 15 mV	S-1315D11-M5T1U3	S-1315D11-A6T2U3
1.2 V ± 15 mV	S-1315D12-M5T1U3	S-1315D12-A6T2U3
1.3 V ± 15 mV	S-1315D13-M5T1U3	S-1315D13-A6T2U3
1.4 V ± 15 mV	S-1315D14-M5T1U3	S-1315D14-A6T2U3
1.5 V ± 1.0%	S-1315D15-M5T1U3	S-1315D15-A6T2U3
1.6 V ± 1.0%	S-1315D16-M5T1U3	S-1315D16-A6T2U3
1.7 V ± 1.0%	S-1315D17-M5T1U3	S-1315D17-A6T2U3
1.8 V ± 1.0%	S-1315D18-M5T1U3	S-1315D18-A6T2U3
1.85 V ± 1.0%	S-1315D1J-M5T1U3	S-1315D1J-A6T2U3
1.9 V ± 1.0%	S-1315D19-M5T1U3	S-1315D19-A6T2U3
2.0 V ± 1.0%	S-1315D20-M5T1U3	S-1315D20-A6T2U3
2.1 V ± 1.0%	S-1315D21-M5T1U3	S-1315D21-A6T2U3
2.2 V ± 1.0%	S-1315D22-M5T1U3	S-1315D22-A6T2U3
2.3 V ± 1.0%	S-1315D23-M5T1U3	S-1315D23-A6T2U3
2.4 V ± 1.0%	S-1315D24-M5T1U3	S-1315D24-A6T2U3
2.5 V ± 1.0%	S-1315D25-M5T1U3	S-1315D25-A6T2U3
2.6 V ± 1.0%	S-1315D26-M5T1U3	S-1315D26-A6T2U3
2.7 V ± 1.0%	S-1315D27-M5T1U3	S-1315D27-A6T2U3
2.8 V ± 1.0%	S-1315D28-M5T1U3	S-1315D28-A6T2U3
2.85 V ± 1.0%	S-1315D2J-M5T1U3	S-1315D2J-A6T2U3
2.9 V ± 1.0%	S-1315D29-M5T1U3	S-1315D29-A6T2U3
3.0 V ± 1.0%	S-1315D30-M5T1U3	S-1315D30-A6T2U3
3.1 V ± 1.0%	S-1315D31-M5T1U3	S-1315D31-A6T2U3
3.2 V ± 1.0%	S-1315D32-M5T1U3	S-1315D32-A6T2U3
3.3 V ± 1.0%	S-1315D33-M5T1U3	S-1315D33-A6T2U3
3.4 V ± 1.0%	S-1315D34-M5T1U3	S-1315D34-A6T2U3
3.5 V ± 1.0%	S-1315D35-M5T1U3	S-1315D35-A6T2U3
3.6 V ± 1.0%	S-1315D36-M5T1U3	S-1315D36-A6T2U3
3.7 V ± 1.0%	S-1315D37-M5T1U3	S-1315D37-A6T2U3
3.8 V ± 1.0%	S-1315D38-M5T1U3	S-1315D38-A6T2U3
3.9 V ± 1.0%	S-1315D39-M5T1U3	S-1315D39-A6T2U3
4.0 V ± 1.0%	S-1315D40-M5T1U3	S-1315D40-A6T2U3
4.1 V ± 1.0%	S-1315D41-M5T1U3	S-1315D41-A6T2U3
4.2 V ± 1.0%	S-1315D42-M5T1U3	S-1315D42-A6T2U3

Remark Please contact our sales office for products other than the above.

■ Pin Configurations

1. SOT-23-5

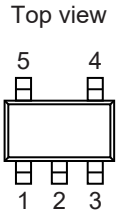

Figure 5

Table 7

Pin No.	Symbol	Description
1	VIN	Input voltage pin
2	VSS	GND pin
3	ON / OFF	ON / OFF pin
4	NC*1	No connection
5	VOUT	Output voltage pin

***1.** The NC pin is electrically open.
The NC pin can be connected to the VIN pin or the VSS pin.

2. HSNT-6 (1212)

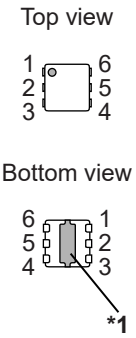

Figure 6

Table 8

Pin No.	Symbol	Description
1	VOUT	Output voltage pin
2	VSS	GND pin
3	NC*2	No connection
4	ON / OFF	ON / OFF pin
5	NC*2	No connection
6	VIN	Input voltage pin

***1.** Connect the heat sink of backside at shadowed area to the board, and set electric potential GND.
However, do not use it as the function of electrode.

***2.** The NC pin is electrically open.
The NC pin can be connected to the VIN pin or the VSS pin.

■ Absolute Maximum Ratings

Table 9

(Ta = +25°C unless otherwise specified)

Item		Symbol	Absolute Maximum Rating	Unit
Input voltage		V_{IN}	V_{SS} – 0.3 to V_{SS} + 6.0	V
		$V_{ON / OFF}$	V_{SS} – 0.3 to V_{IN} + 0.3	V
Output voltage		V_{OUT}	V_{SS} – 0.3 to V_{IN} + 0.3	V
Output current		I_{OUT}	260	mA
Power dissipation	SOT-23-5	P_D	600*1	mW
	HSNT-6 (1212)		480*1	mW
Operation ambient temperature		T_{opr}	–40 to +85	°C
Storage temperature		T_{stg}	–40 to +125	°C

***1.** When mounted on board
[Mounted board]
(1) Board size: 114.3 mm × 76.2 mm × t1.6 mm
(2) Name: JEDEC STANDARD51-7

Caution The absolute maximum ratings are rated values exceeding which the product could suffer physical damage. These values must therefore not be exceeded under any conditions.

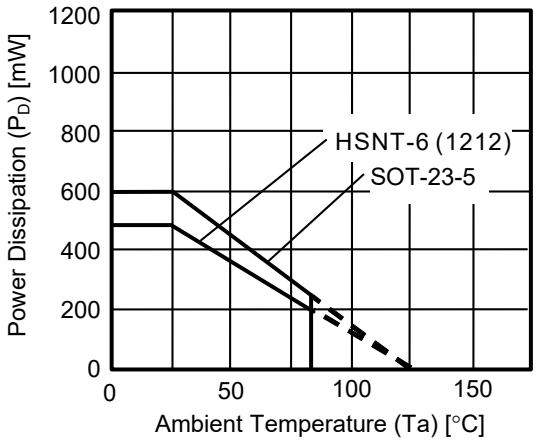

Figure 7 Power Dissipation of Package (When Mounted on Board)

Power Dissipation of HSNT-6 (1212) (Reference)

Power dissipation of package differs depending on the mounting conditions.
Consider the power dissipation characteristics under the following conditions as reference.

[Mounted board]

(1) Board size: 40 mm × 40 mm × t0.8 mm
(2) Board material: Glass epoxy resin (four layers)
(3) Wiring ratio: 50%
(4) Test conditions: When mounted on board (wind speed: 0 m/s)
(5) Land pattern: Refer to the recommended land pattern (drawing code: PM006-A-L-SD)

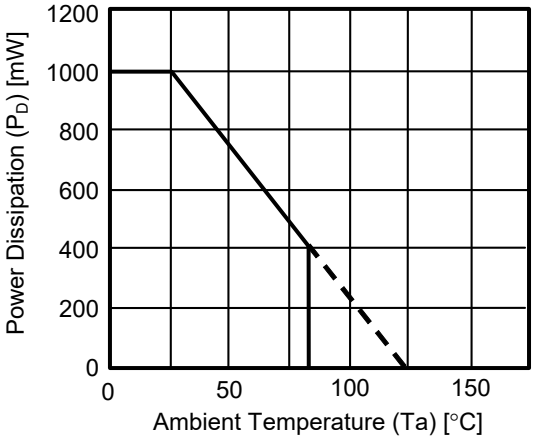

Figure 8 Power Dissipation of Package (When Mounted on Board)

Table 10

Condition	Power Dissipation (Reference)	Thermal Resistance Value (θj–a)
HSNT-6 (1212) (When mounted on board)	1000 mW	100°C/W

■ Electrical Characteristics

Table 11

(Ta = +25°C unless otherwise specified)

Item	Symbol	Condition		Min.	Typ.	Max.	Unit	Test Circuit
Output voltage*1	$V_{OUT(E)}$	$V_{IN} = V_{OUT(S)} + 1.0$ V, I_{OUT} = 30 mA	1.0 V ≤ $V_{OUT(S)}$ < 1.5 V	$V_{OUT(S)} - 0.015$	$V_{OUT(S)}$	$V_{OUT(S)} + 0.015$	V	1
			1.5 V ≤ $V_{OUT(S)}$ ≤ 4.2 V	$V_{OUT(S)} \times 0.99$	$V_{OUT(S)}$	$V_{OUT(S)} \times 1.01$	V	1
Output current*2	I_{OUT}	$V_{IN} \geq V_{OUT(S)} + 1.0$ V		200*5	–	–	mA	3
Dropout voltage*3	V_{drop}	I_{OUT} = 200 mA	1.0 V ≤ $V_{OUT(S)}$ < 1.1 V	–	0.629	0.844	V	1
			1.1 V ≤ $V_{OUT(S)}$ < 1.2 V	–	0.554	0.744	V	1
			1.2 V ≤ $V_{OUT(S)}$ < 1.5 V	–	0.485	0.665	V	1
			1.5 V ≤ $V_{OUT(S)}$ < 2.0 V	–	0.371	0.486	V	1
			2.0 V ≤ $V_{OUT(S)}$ < 2.6 V	–	0.272	0.344	V	1
			2.6 V ≤ $V_{OUT(S)}$ ≤ 4.2 V	–	0.224	0.280	V	1
Line regulation	$\frac{\Delta V_{OUT1}}{\Delta V_{IN} \bullet V_{OUT}}$	$V_{OUT(S)} + 0.5$ V ≤ V_{IN} ≤ 5.5 V, I_{OUT} = 30 mA		–	0.05	0.2	%/V	1
Load regulation	ΔV_{OUT2}	$V_{IN} = V_{OUT(S)} + 1.0$ V, 1 mA ≤ I_{OUT} ≤ 200 mA		–	25	50	mV	1
Output voltage temperature coefficient*4	$\frac{\Delta V_{OUT}}{\Delta Ta \bullet V_{OUT}}$	$V_{IN} = V_{OUT(S)} + 1.0$ V, I_{OUT} = 30 mA −40°C ≤ Ta ≤ +85°C		–	±100	–	ppm/°C	1
Current consumption during operation	I_{SS1}	$V_{IN} = V_{OUT(S)} + 1.0$ V, ON / OFF pin = ON, no load		–	7.0	13	µA	2
Current consumption during power-off	I_{SS2}	$V_{IN} = V_{OUT(S)} + 1.0$ V, ON / OFF pin = OFF, no load		–	0.1	1.0	µA	2
Input voltage	V_{IN}	–		1.4	–	5.5	V	–
ON / OFF pin input voltage "H"	V_{SH}	$V_{IN} = V_{OUT(S)} + 1.0$ V, R_L = 1.0 kΩ determined by V_{OUT} output level		1.0	–	–	V	4
ON / OFF pin input voltage "L"	V_{SL}	$V_{IN} = V_{OUT(S)} + 1.0$ V, R_L = 1.0 kΩ determined by V_{OUT} output level		–	–	0.30	V	4
ON / OFF pin input current "H"	I_{SH}	V_{IN} = 5.5 V, $V_{ON / OFF}$ = 5.5 V	A / C type (with constant current source pull-down)	–	0.1	–	µA	4
			B / D type (without constant current source pull-down)	−0.1	–	0.1	µA	4
ON / OFF pin input current "L"	I_{SL}	V_{IN} = 5.5 V, $V_{ON / OFF}$ = 0 V		−0.1	–	0.1	µA	4
Ripple rejection	|RR|	$V_{IN} = V_{OUT(S)} + 1.0$ V, f = 1.0 kHz, ΔV_{rip} = 0.2 Vrms, I_{OUT} = 30 mA	1.0 V ≤ $V_{OUT(S)}$ ≤ 1.2 V	–	65	–	dB	5
			1.2 V < $V_{OUT(S)}$ ≤ 2.8 V	–	60	–	dB	5
			2.8 V < $V_{OUT(S)}$ ≤ 4.2 V	–	55	–	dB	5
Short-circuit current	I_{short}	$V_{IN} = V_{OUT(S)} + 1.0$ V, ON / OFF pin = ON, V_{OUT} = 0 V		–	50	–	mA	3
Discharge shunt resistance during power-off	R_{LOW}	V_{IN} = 5.5 V, V_{OUT} = 0.1 V	A / B type (with discharge shunt function)	–	30	–	Ω	3

***1.** $V_{OUT(S)}$: Set output voltage
$V_{OUT(E)}$: Actual output voltage
Output voltage when fixing I_{OUT} (= 30 mA) and inputting $V_{OUT(S)}$ + 1.0 V

***2.** The output current at which the output voltage becomes 95% of $V_{OUT(E)}$ after gradually increasing the output current.

***3.** $V_{drop} = V_{IN1} - (V_{OUT3} \times 0.98)$
V_{OUT3} is the output voltage when $V_{IN} = V_{OUT(S)} + 1.0$ V and I_{OUT} = 200 mA.
V_{IN1} is the input voltage at which the output voltage becomes 98% of V_{OUT3} after gradually decreasing the input voltage.

***4.** A change in the temperature of the output voltage [mV/°C] is calculated using the following equation.

$$\frac{\Delta V_{OUT}}{\Delta Ta}\ [\text{mV/°C}]^{*1} = V_{OUT(S)}\ [\text{V}]^{*2} \times \frac{\Delta V_{OUT}}{\Delta Ta \bullet V_{OUT}}\ [\text{ppm/°C}]^{*3} \div 1000$$

***1.** Change in temperature of output voltage
***2.** Set output voltage
***3.** Output voltage temperature coefficient

***5.** The output current can be at least this value.
Due to restrictions on the package power dissipation, this value may not be satisfied. Attention should be paid to the power dissipation of the package when the output current is large.
This specification is guaranteed by design.

■ Test Circuits

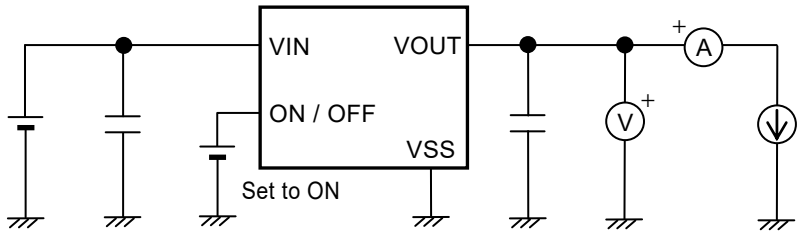

Figure 9 Test Circuit 1

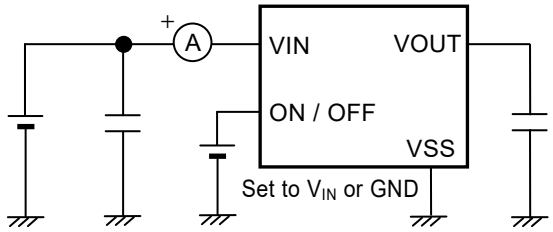

Figure 10 Test Circuit 2

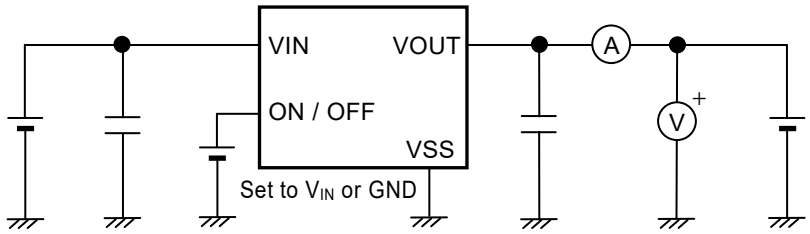

Figure 11 Test Circuit 3

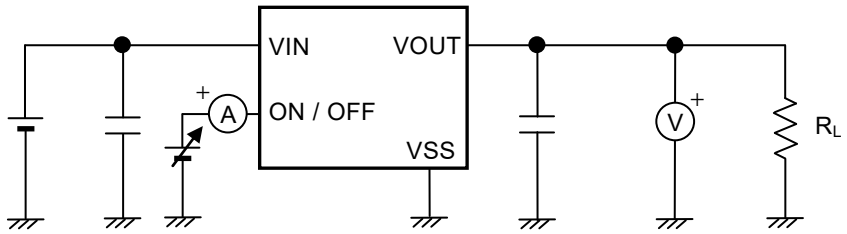

Figure 12 Test Circuit 4

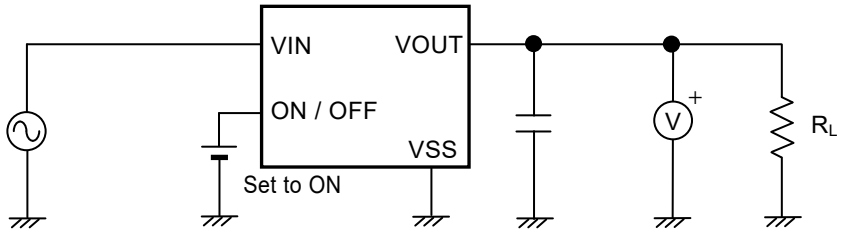

Figure 13 Test Circuit 5

■ Standard Circuit

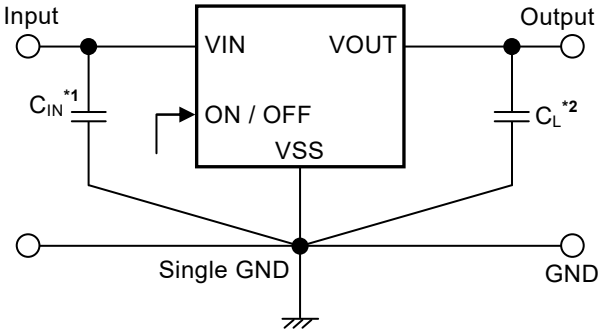

***1.** C_{IN} is a capacitor for stabilizing the input.
***2.** An output capacitor (C_L) is unnecessary.
However, if it is used, select an output capacitor which is 10 μF or less.

Figure 14

Caution The above connection diagram and constants will not guarantee successful operation. Perform thorough evaluation using the actual application to set the constants.

■ Condition of Application

Input capacitor (C_{IN}): 0.1 μF or more
Output capacitor (C_L): Unnecessary, or an output capacitor which is 10 μF or less.

Caution Generally a series regulator may cause oscillation, depending on the selection of external parts. Confirm that no oscillation occurs in the application for which the above capacitors are used.

■ Selection of Input and Output Capacitors (C_{IN}, C_L)

The S-1315 Series does not require an output capacitor between the VOUT pin and the VSS pin for phase compensation. Operation is stabilized even without an output capacitor over the entire temperature range. If the capacitor is used, the operation is stabilized with a ceramic capacitor which is $C_L \leq 10$ μF in the same way. Moreover, when using an OS capacitor, a tantalum capacitor, or an aluminum electrolytic capacitor, the capacitance must be 10 μF or less.
The value of the output overshoot or undershoot transient response varies depending on the value of the output capacitor. The required capacitance of the input capacitor differs depending on the application.
The recommended capacitance for an application is $C_{IN} \geq 0.1$ μF; however, when selecting the output capacitor, perform sufficient evaluation, including evaluation of temperature characteristics, on the actual device.

■ Explanation of Terms

1. Low dropout voltage regulator

This voltage regulator has the low dropout voltage due to its built-in low on-resistance transistor.

2. Output voltage (V_{OUT})

The accuracy of the output voltage is ensured at ±1.0% or ±15 mV[*1] under the specified conditions of fixed input voltage[*2], fixed output current, and fixed temperature.

***1.** When V_{OUT} < 1.5 V: ±15 mV, when $V_{OUT} \geq$ 1.5 V: ±1.0%
***2.** Differs depending on the product.

Caution If the above conditions change, the output voltage value may vary and exceed the accuracy range of the output voltage. Refer to "■ Electrical Characteristics" and "■ Characteristics (Typical Data)" for details.

3. Line regulation $\left(\frac{\Delta V_{OUT1}}{\Delta V_{IN} \bullet V_{OUT}}\right)$

Indicates the dependency of the output voltage on the input voltage. That is, the values show how much the output voltage changes due to a change in the input voltage with the output current remaining unchanged.

4. Load regulation (ΔV_{OUT2})

Indicates the dependency of the output voltage on the output current. That is, the values show how much the output voltage changes due to a change in the output current with the input voltage remaining unchanged.

5. Dropout voltage (V_{drop})

Indicates the difference between input voltage (V_{IN1}) and the output voltage when; decreasing input voltage (V_{IN}) gradually until the output voltage has dropped out to the value of 98% of output voltage (V_{OUT3}), which is at $V_{IN} = V_{OUT(S)} + 1.0$ V.

$V_{drop} = V_{IN1} - (V_{OUT3} \times 0.98)$

6. Output voltage temperature coefficient $\left(\frac{\Delta V_{OUT}}{\Delta Ta \bullet V_{OUT}}\right)$

The shaded area in **Figure 15** is the range where V_{OUT} varies in the operation temperature range when the output voltage temperature coefficient is ±100 ppm/°C.

Example of the S-1315A10 typ. product

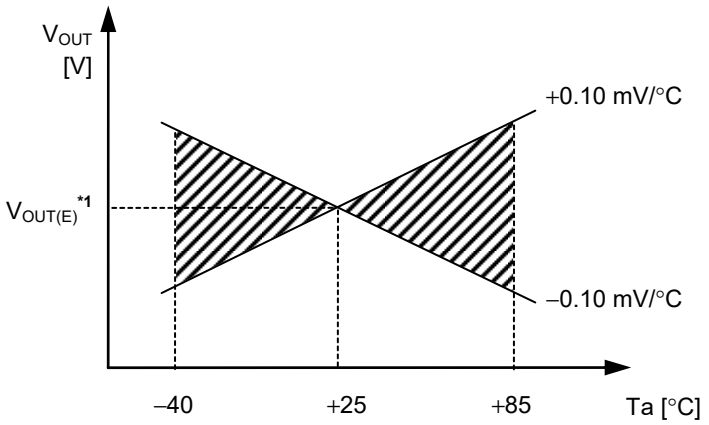

***1.** $V_{OUT(E)}$ is the value of the output voltage measured at Ta = +25°C.

Figure 15

A change in the temperature of the output voltage [mV/°C] is calculated using the following equation.

$$\frac{\Delta V_{OUT}}{\Delta Ta}\ [mV/°C]^{*1} = V_{OUT(S)}\ [V]^{*2} \times \frac{\Delta V_{OUT}}{\Delta Ta \bullet V_{OUT}}\ [ppm/°C]^{*3} \div 1000$$

***1.** Change in temperature of output voltage
***2.** Set output voltage
***3.** Output voltage temperature coefficient

■ Operation

1. Basic operation

Figure 16 shows the block diagram of the S-1315 Series.
The error amplifier compares the reference voltage (V_{ref}) with feedback voltage (V_{fb}), which is the output voltage resistance-divided by feedback resistors (R_s and R_f). It supplies the gate voltage necessary to maintain the constant output voltage which is not influenced by the input voltage and temperature change, to the output transistor.

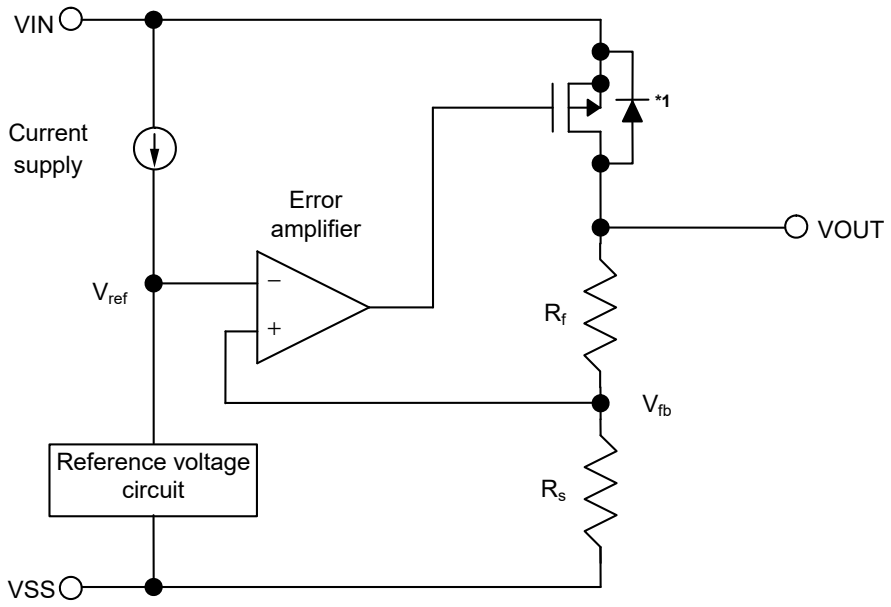

***1**. Parasitic diode

Figure 16

2. Output transistor

In the S-1315 Series, a low on-resistance P-channel MOS FET is used as the output transistor.
Be sure that V_{OUT} does not exceed V_{IN} + 0.3 V to prevent the voltage regulator from being damaged due to reverse current flowing from the VOUT pin through a parasitic diode to the VIN pin, when the potential of V_{OUT} became higher than V_{IN}.

3. ON / OFF pin

This pin starts and stops the regulator.

When the ON / OFF pin is set to OFF level, the entire internal circuit stops operating, and the built-in P-channel MOS FET output transistor between the VIN pin and the VOUT pin is turned off, reducing current consumption significantly.
Note that the current consumption increases when a voltage of 0.25 V to 1.0 V is applied to the ON / OFF pin. The ON / OFF pin is configured as shown in **Figure 17** and **Figure 18**.

3. 1 S-1315 Series A / C type

The ON / OFF pin is internally pulled down to the VSS pin in the floating status, so the VOUT pin is set to the V_{SS} level. For the ON / OFF pin current, refer to the A / C type of ON / OFF pin input current "H" in "■ **Electrical Characteristics**".

3. 2 S-1315 Series B / D type

The ON / OFF pin is internally not pulled up or pulled down, so do not use this pin in the floating status. When not using the ON / OFF pin, connect the pin to the VIN pin.

Table 12

Product Type	ON / OFF Pin	Internal Circuit	VOUT Pin Voltage	Current Consumption
A / B / C / D	"H": ON	Operate	Set value	I_{SS1}*1
A / B / C / D	"L": OFF	Stop	V_{SS} level	I_{SS2}

***1**. Note that the IC's current consumption increases as much as current flows into the constant current when the ON / OFF pin is connected to the VIN pin and the S-1315 Series A / C type is operating (refer to **Figure 17**).

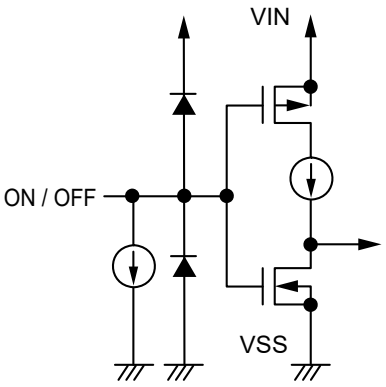

Figure 17 S-1315 Series A / C type

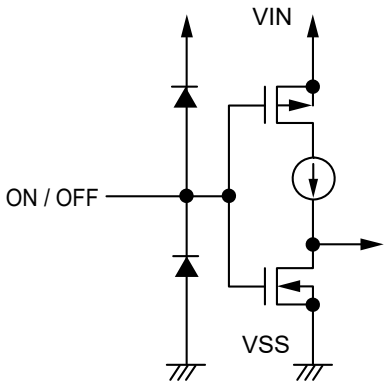

Figure 18 S-1315 Series B / D type

4. Discharge shunt function (S-1315 Series A / B type)

The S-1315 Series A / B type has a built-in discharge shunt circuit to discharge the output capacitance. The output capacitance is discharged as follows so that the VOUT pin reaches the V_{SS} level.

(1) The ON / OFF pin is set to OFF level.
(2) The output transistor is turned off.
(3) The discharge shunt circuit is turned on.
(4) The output capacitor discharges.

Since the S-1315 Series C / D type does not have a discharge shunt circuit, the VOUT pin is set to the V_{SS} level through several MΩ internal divided resistors between the VOUT pin and the VSS pin. The S-1315 Series A / B type allows the VOUT pin to reach the V_{SS} level rapidly due to the discharge shunt circuit.

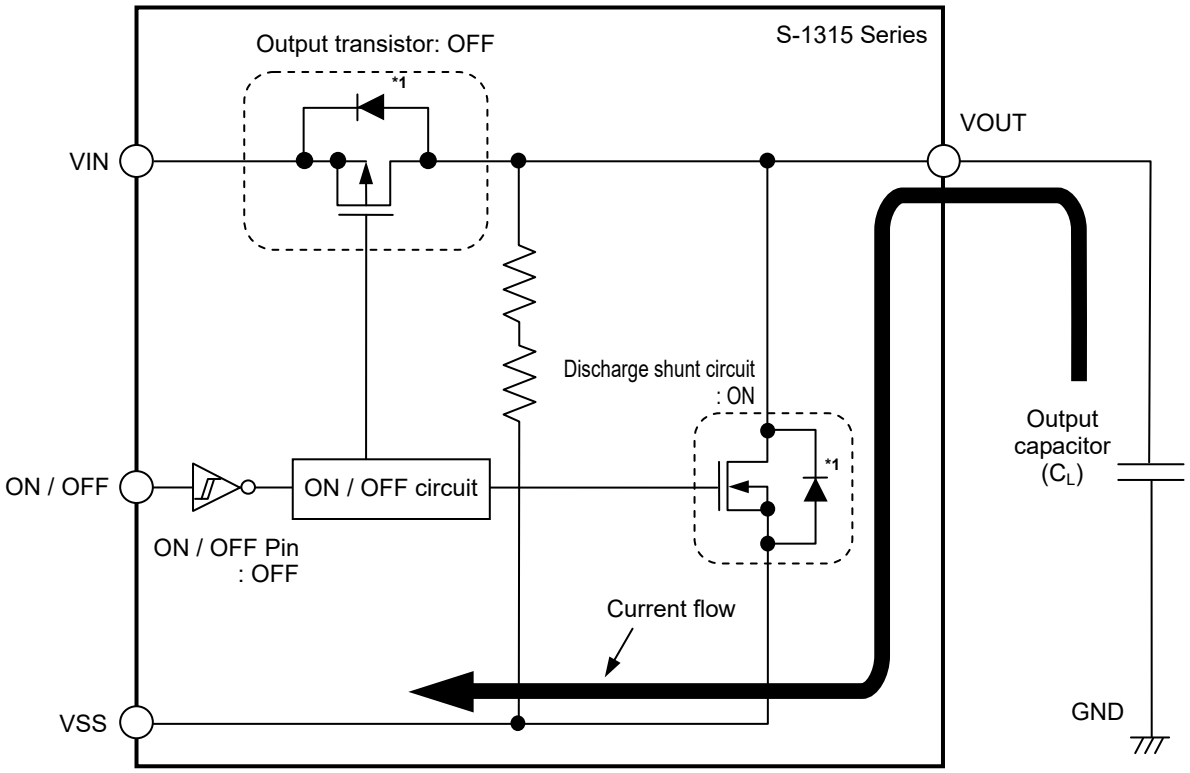

***1**. Parasitic diode

Figure 19

5. Constant current source pull-down (S-1315 Series A / C type)

The ON / OFF pin is internally pulled down to the VSS pin in the floating status, so the VOUT pin is set to the V_{SS} level.

Note that the IC's current consumption increases as much as current flows into the constant current of 0.1 μA typ. when the ON / OFF pin is connected to the VIN pin.

6. Overcurrent protection circuit

The S-1315 Series includes an overcurrent protection circuit having the characteristics shown in "**1. Output voltage vs. Output current (When load current increases) (Ta = +25°C)**" in "**■ Characteristics (Typical Data)**", in order to protect the output transistor against an excessive output current and short circuiting between the VOUT pin and the VSS pin. The current (I_{short}) when the output pin is short-circuited is internally set at approx. 50 mA typ., and the normal value is restored for the output voltage, if releasing a short circuit once.

Caution This overcurrent protection circuit does not work as for thermal protection. If this IC long keeps short circuiting inside, pay attention to the conditions of input voltage and load current so that, under the usage conditions including short circuit, the loss of the IC will not exceed power dissipation of the package.

■ Precautions

- Wiring patterns for the VIN pin, the VOUT pin and GND should be designed so that the impedance is low. When mounting an output capacitor between the VOUT pin and the VSS pin (C_L) and the capacitor for stabilizing the input between the VIN pin and the VSS pin (C_{IN}), the distance from the capacitors to these pins should be as short as possible.
- Note that generally the output voltage may increase when a series regulator is used at low load current (0.1 mA or less).
- Note that generally the output voltage may increase due to the leakage current from an output driver when a series regulator is used at high temperature.
- Note that the output voltage may increase due to the leakage current from an output driver even if the ON / OFF pin is at OFF level when a series regulator is used at high temperature.
- Generally a series regulator may cause oscillation, depending on the selection of external parts. The following conditions are recommended for the S-1315 Series. However, be sure to perform sufficient evaluation under the actual usage conditions for selection, including evaluation of temperature characteristics. Refer to "**5. Example of equivalent series resistance vs. Output current characteristics (Ta = +25°C)**" in "**■ Reference Data**" for the equivalent series resistance (R_{ESR}) of the output capacitor.

  Input capacitor (C_{IN}): 0.1 μF or more
  Output capacitor (C_L): Unnecessary or an output capacitor which is 10 μF or less.

- The voltage regulator may oscillate when the impedance of the power supply is high and the input capacitance is small or an input capacitor is not connected.
- If the output capacitance is small, power supply's fluctuation and the characteristics of load fluctuation become worse. Sufficiently evaluate the output voltage's fluctuation with the actual device.
- Overshoot may occur in the output voltage momentarily if the voltage is rapidly raised at power-on or when the power supply fluctuates. Sufficiently evaluate the output voltage at power-on with the actual device.
- Output voltage noise may increase when the output current is low.
- The application conditions for the input voltage, the output voltage, and the load current should not exceed the package power dissipation.
- Do not apply an electrostatic discharge to this IC that exceeds the performance ratings of the built-in electrostatic protection circuit.
- In determining the output current, attention should be paid to the output current value specified in **Table 11** in "**■ Electrical Characteristics**" and footnote ***5** of the table.
- ABLIC Inc. claims no responsibility for any disputes arising out of or in connection with any infringement by products including this IC of patents owned by a third party.

■ Characteristics (Typical Data)

1. Output voltage vs. Output current (When load current increases) (Ta = +25°C)

1. 1 V_{OUT} = 1.0 V

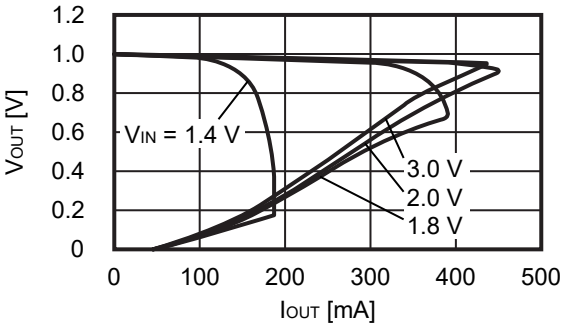

1. 2 V_{OUT} = 2.8 V

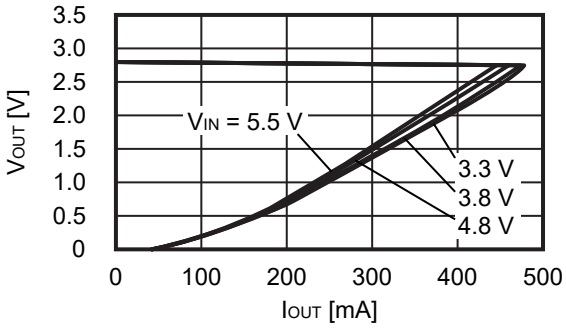

1. 3 V_{OUT} = 4.2 V

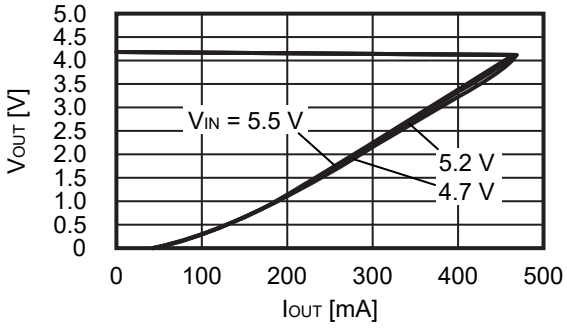

Remark In determining the output current, attention should be paid to the following.
1. The minimum output current value and footnote ***5** in **Table 11** in "■ **Electrical Characteristics**"
2. The package power dissipation

2. Output voltage vs. Input voltage (Ta = +25°C)

2. 1 V_{OUT} = 1.0 V

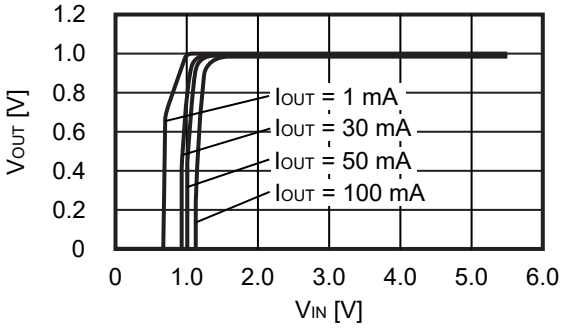

2. 2 V_{OUT} = 2.8 V

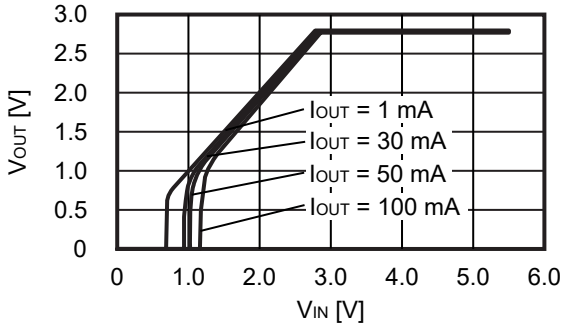

2. 3 V_{OUT} = 4.2 V

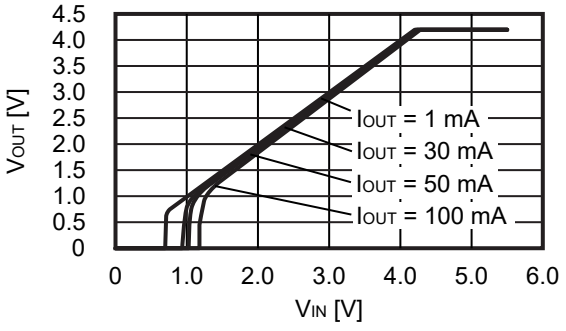

3. Dropout voltage vs. Output current

3. 1 V_{OUT} = 1.0 V

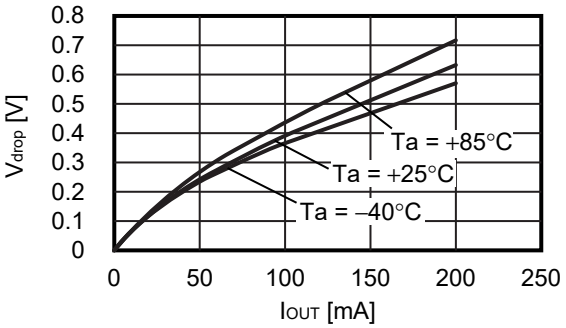

3. 2 V_{OUT} = 2.8 V

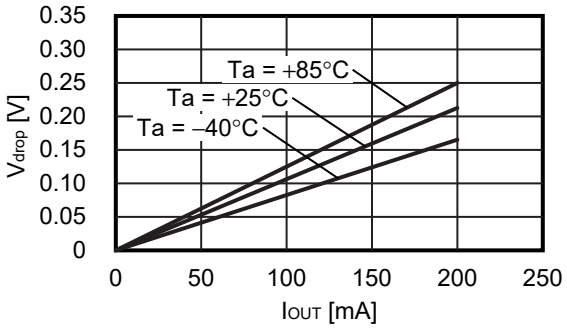

3. 3 V_{OUT} = 4.2 V

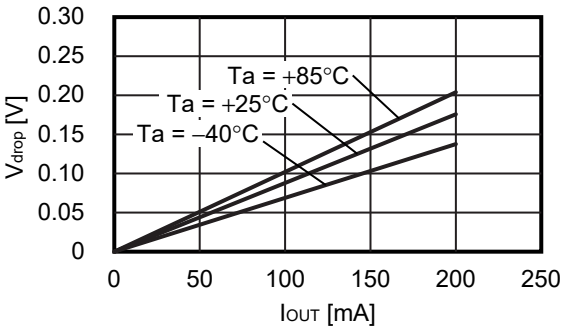

4. Dropout voltage vs. Set output voltage

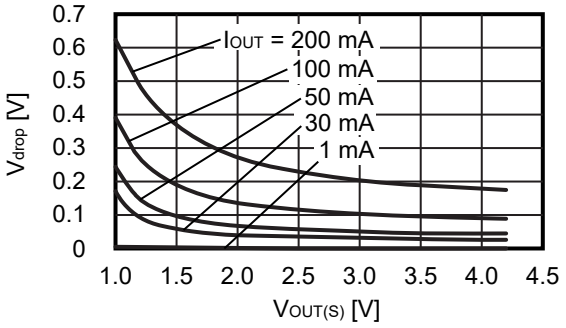

5. Output voltage vs. Ambient temperature

5. 1 V_{OUT} = 1.0 V

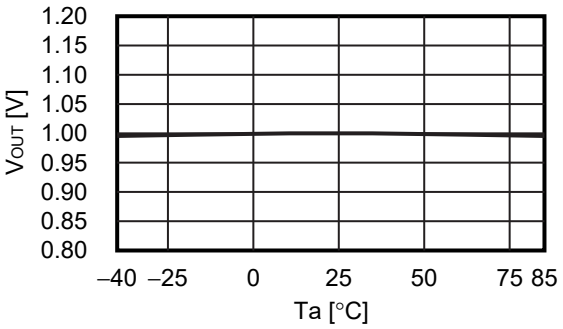

5. 2 V_{OUT} = 2.8 V

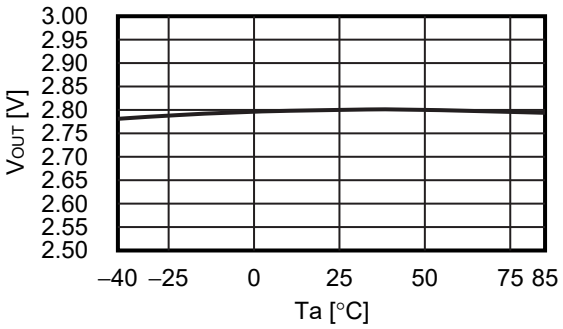

5. 3 V_{OUT} = 4.2 V

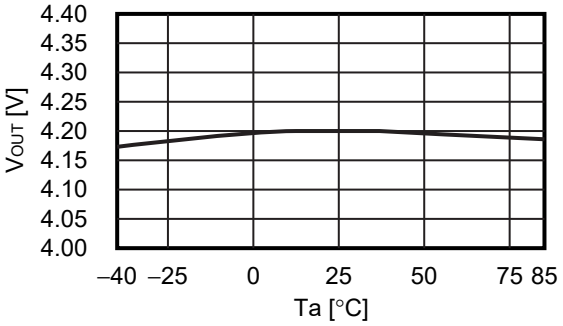

6. Current consumption vs. Input voltage

6. 1 V_{OUT} = 1.0 V

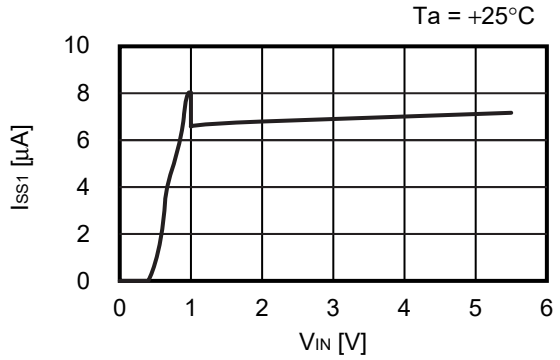

6. 2 V_{OUT} = 2.8 V

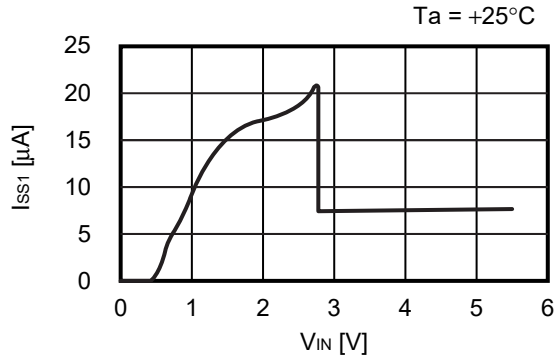

6. 3 V_{OUT} = 4.2 V

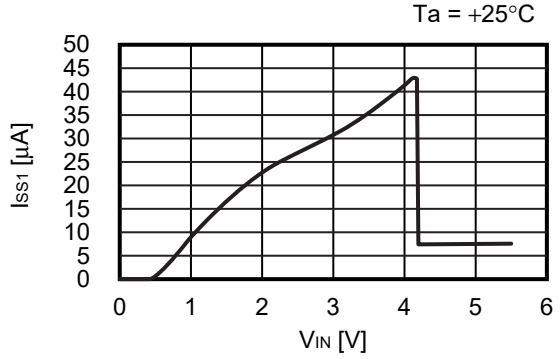

7. Current consumption vs. Ambient temperature

7. 1 V_{OUT} = 1.0 V

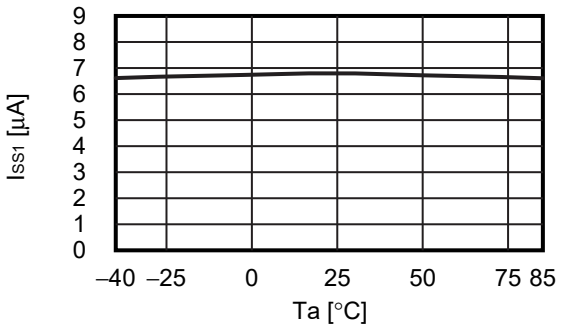

7. 2 V_{OUT} = 2.8 V

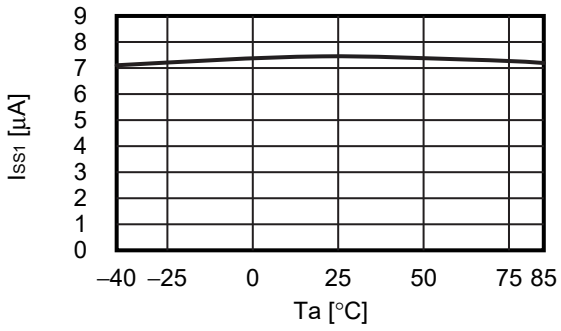

7. 3 V_{OUT} = 4.2 V

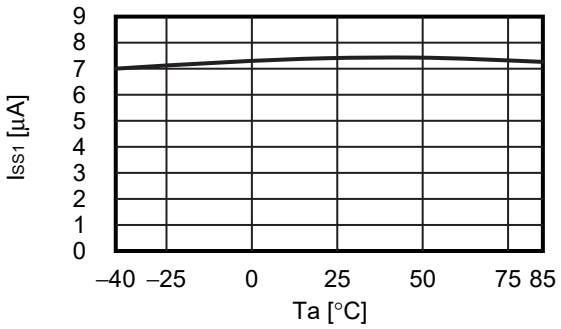

8. Ripple rejection (Ta = +25°C)

8. 1 V_{OUT} = 1.0 V

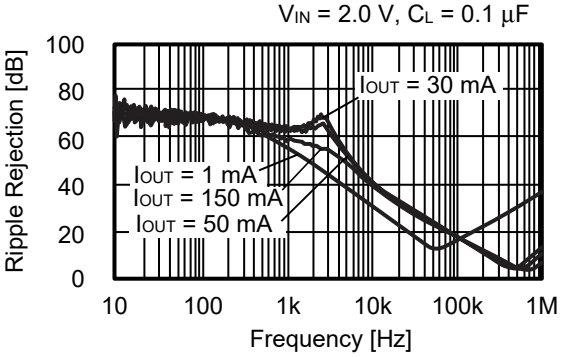

8. 2 V_{OUT} = 2.8 V

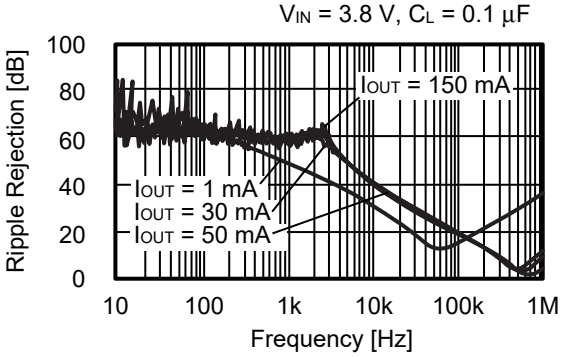

8. 3 V_{OUT} = 4.2 V

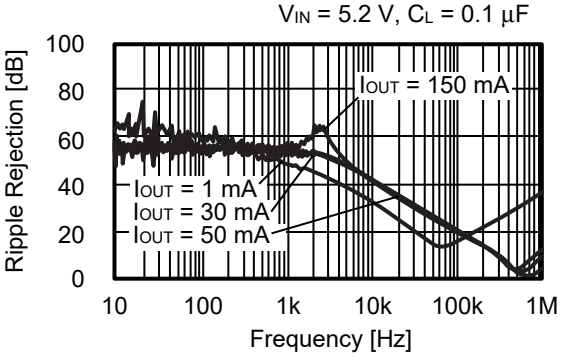

9. Ripple rejection vs. Output capacitance (Ta = +25°C)

9. 1 V_{OUT} = 1.0 V

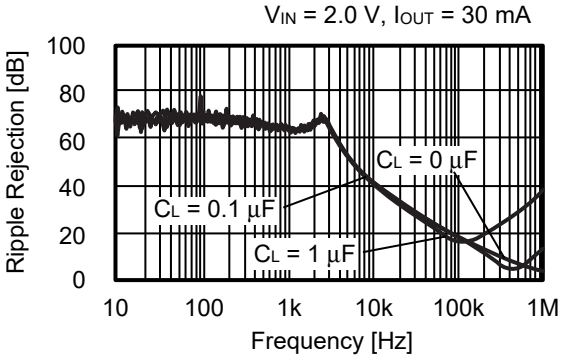

9. 2 V_{OUT} = 2.8 V

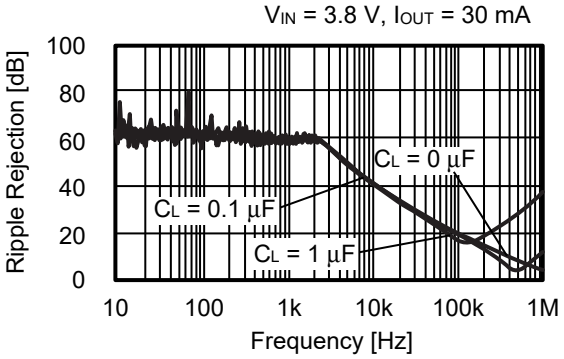

9. 3 V_{OUT} = 4.2 V

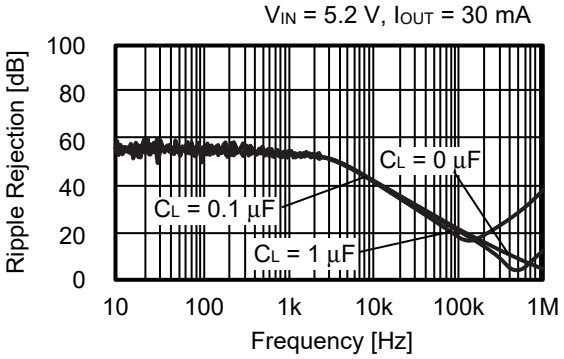

■ Reference Data

1. Transient response characteristics when input (Ta = +25°C)

1. 1 V_{OUT} = 1.0 V

V_{IN} = 2.0 V ↔ 3.0 V, C_L = 0 µF, I_{OUT} = 30 mA, t_r = t_f = 5.0 µs

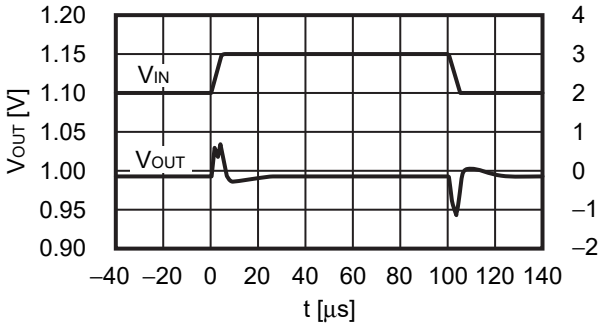

V_{IN} = 2.0 V ↔ 3.0 V, C_L = 0.1 µF, I_{OUT} = 30 mA, t_r = t_f = 5.0 µs

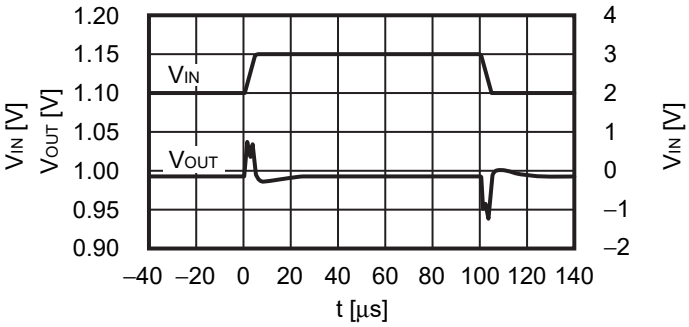

1. 2 V_{OUT} = 2.8 V

V_{IN} = 3.8 V ↔ 4.8 V, C_L = 0 µF, I_{OUT} = 30 mA, t_r = t_f = 5.0 µs

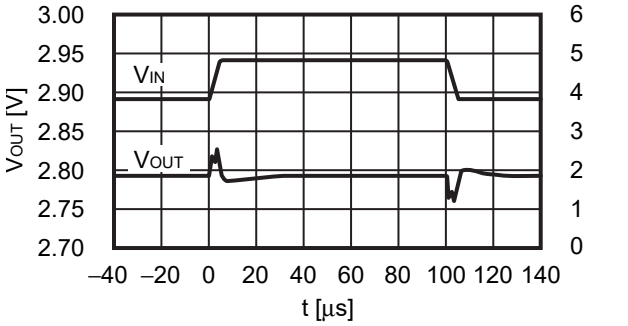

V_{IN} = 3.8 V ↔ 4.8 V, C_L = 0.1 µF, I_{OUT} = 30 mA, t_r = t_f = 5.0 µs

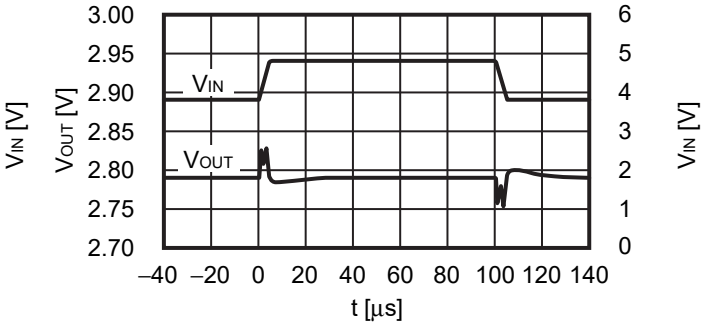

1. 3 V_{OUT} = 4.2 V

V_{IN} = 4.5 V ↔ 5.5 V, C_L = 0 µF, I_{OUT} = 30 mA, t_r = t_f = 5.0 µs

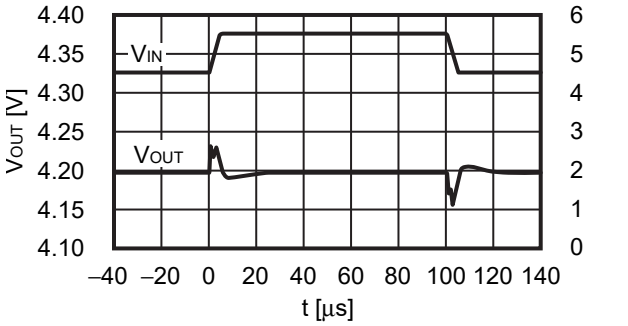

V_{IN} = 4.5 V ↔ 5.5 V, C_L = 0.1 µF, I_{OUT} = 30 mA, t_r = t_f = 5.0 µs

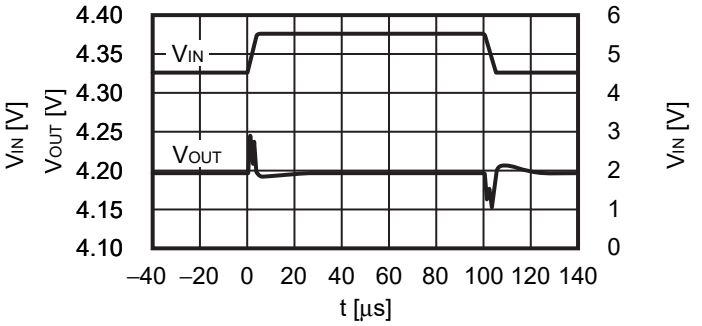

2. Transient response characteristics of load (Ta = +25°C)

2. 1 V_{OUT} = 1.0 V

V_{IN} = 2.0 V, C_{IN} = 0.1 µF, I_{OUT} = 5.0 mA ↔ 50 mA, t_r = t_f = 2.0 µs

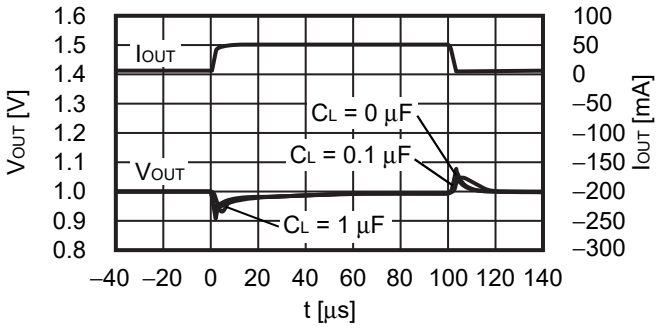

V_{IN} = 2.0 V, C_{IN} = 0.1 µF, I_{OUT} = 50 mA ↔ 100 mA, t_r = t_f = 0.5 µs

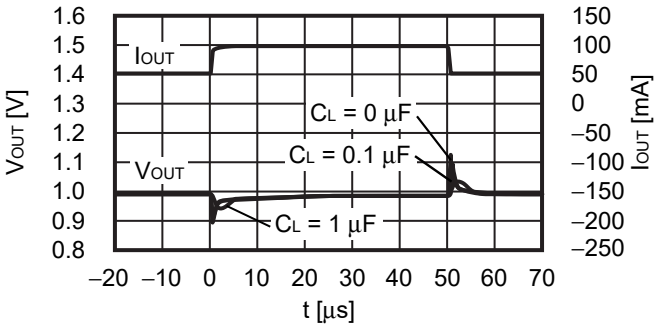

2. 2 V_{OUT} = 2.8 V

V_{IN} = 3.8 V, C_{IN} = 0.1 µF, I_{OUT} = 5.0 mA ↔ 50 mA, t_r = t_f = 2.0 µs

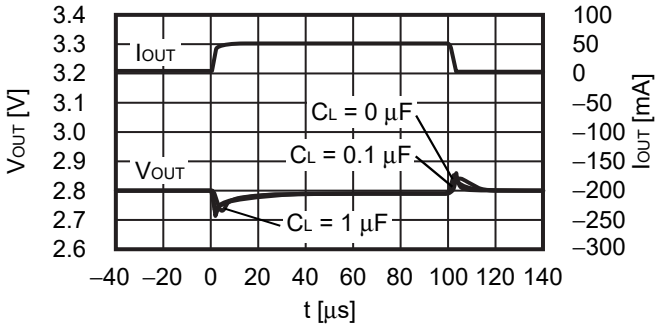

V_{IN} = 3.8 V, C_{IN} = 0.1 µF, I_{OUT} = 50 mA ↔ 100 mA, t_r = t_f = 0.5 µs

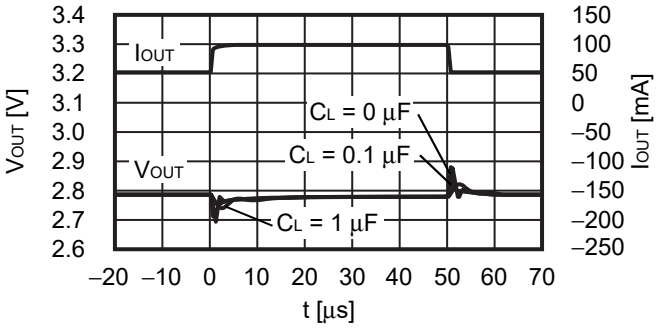

2. 3 V_{OUT} = 4.2 V

V_{IN} = 5.2 V, C_{IN} = 0.1 µF, I_{OUT} = 5.0 mA ↔ 50 mA, t_r = t_f = 2.0 µs

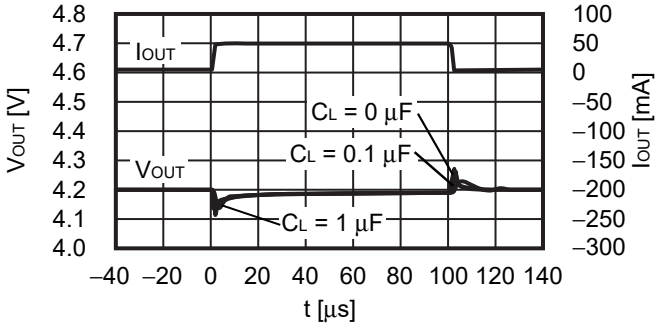

V_{IN} = 5.2 V, C_{IN} = 0.1 µF, I_{OUT} = 50 mA ↔ 100 mA, t_r = t_f = 0.5 µs

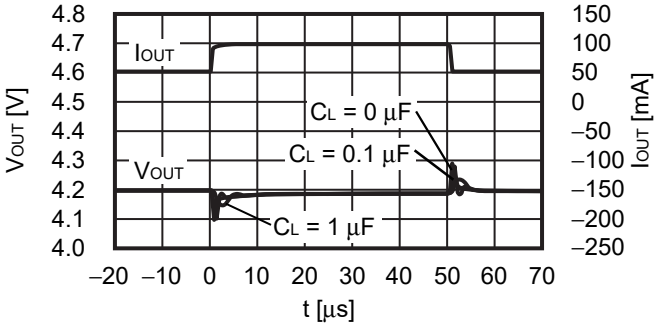

3. Transient response characteristics of ON / OFF pin (when rising) (Ta = +25°C)

3. 1 V_{OUT} = 1.0 V

V_{IN} = 2.0 V, C_{IN} = 0.1 µF, C_L = 0 µF, $V_{ON/OFF}$ = 0 V → 2.0 V

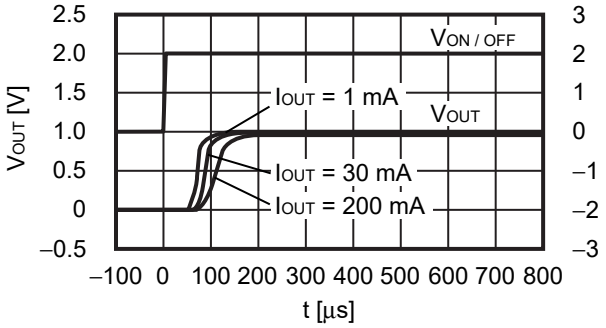

V_{IN} = 2.0 V, C_{IN} = 0.1 µF, C_L = 1.0 µF, $V_{ON/OFF}$ = 0 V → 2.0 V

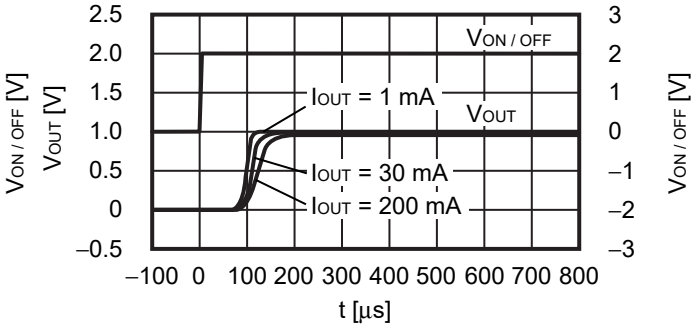

3. 2 V_{OUT} = 2.8 V

V_{IN} = 3.8 V, C_{IN} = 0.1 µF, C_L = 0 µF, $V_{ON/OFF}$ = 0 V → 3.8 V

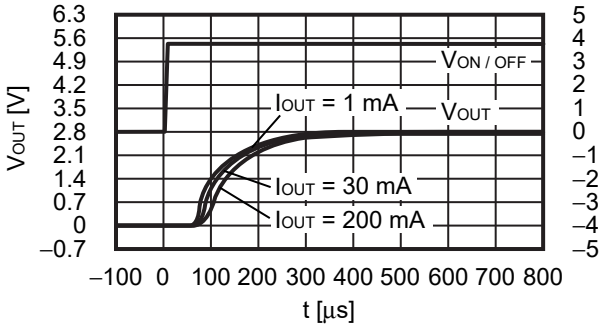

V_{IN} = 3.8 V, C_{IN} = 0.1 µF, C_L = 1.0 µF, $V_{ON/OFF}$ = 0 V → 3.8 V

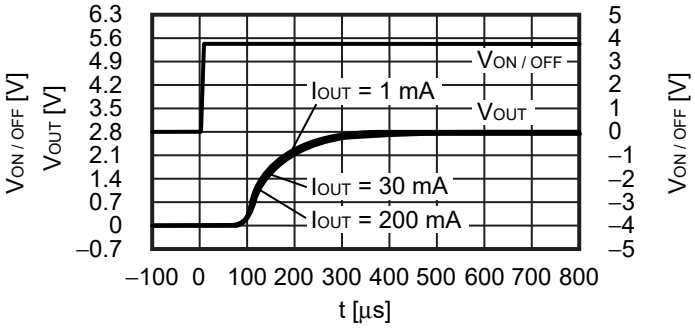

3. 3 V_{OUT} = 4.2 V

V_{IN} = 5.2 V, C_{IN} = 0.1 µF, C_L = 0 µF, $V_{ON/OFF}$ = 0 V → 5.2 V

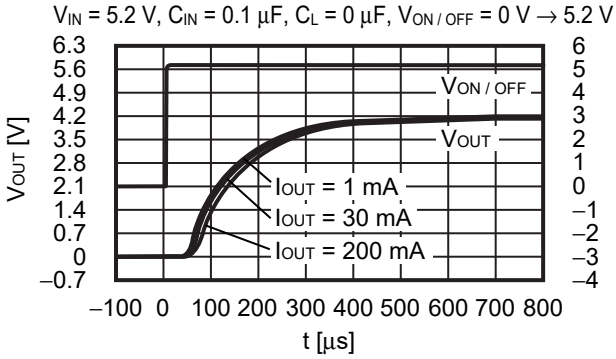

V_{IN} = 5.2 V, C_{IN} = 0.1 µF, C_L = 1.0 µF, $V_{ON/OFF}$ = 0 V → 5.2 V

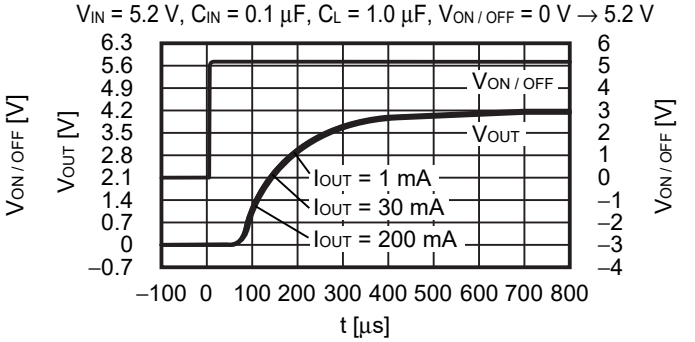

4. Transient response characteristics of ON / OFF pin (when falling) (Ta = +25°C)

4. 1 V_{OUT} = 1.0 V

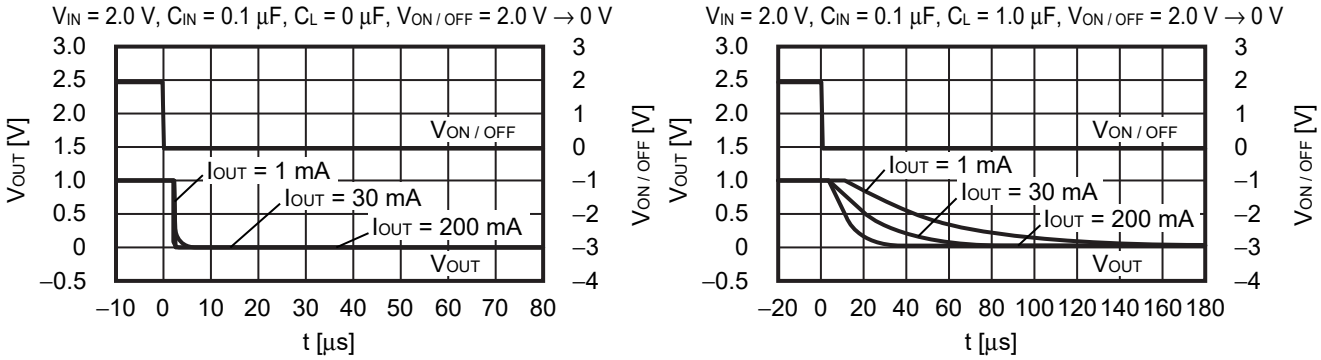

4. 2 V_{OUT} = 2.8 V

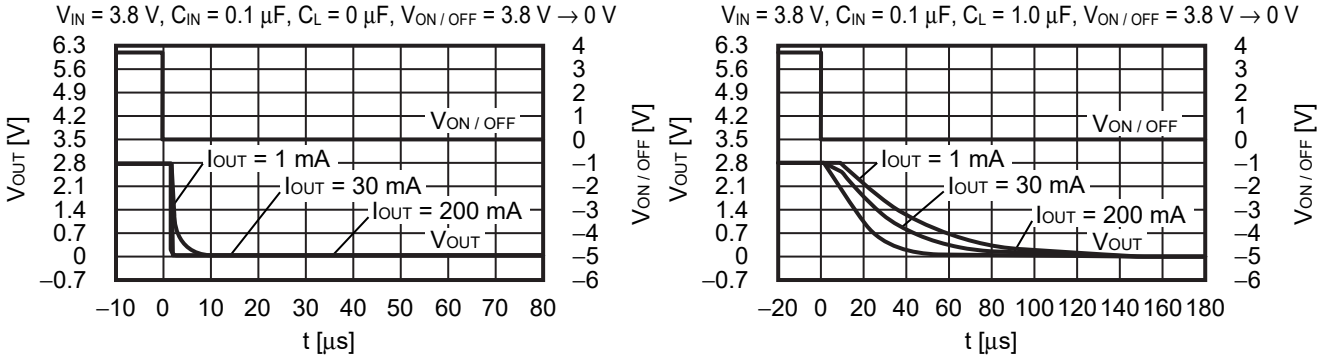

4. 3 V_{OUT} = 4.2 V

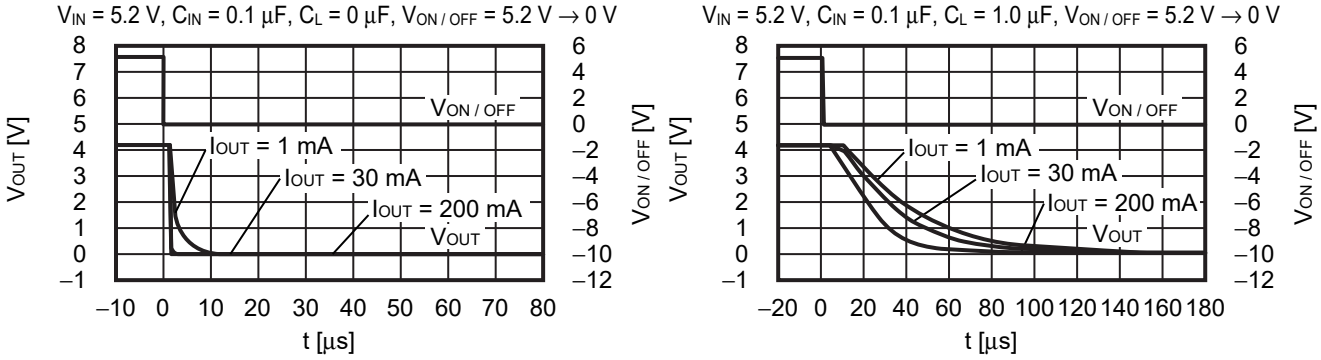

5. Example of equivalent series resistance vs. Output current characteristics (Ta = +25°C)

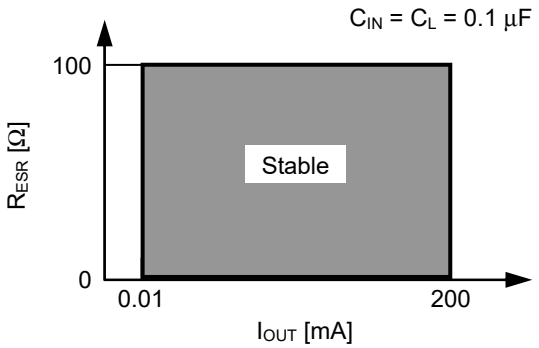

Figure 20

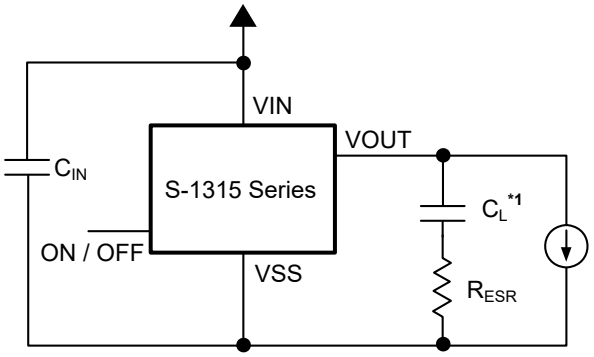

***1.** C_L: Murata Manufacturing Co.,Ltd. GRM31CR72E104KW03L (0.1 µF)

Figure 21

■ Marking Specifications

1. SOT-23-5

Top view

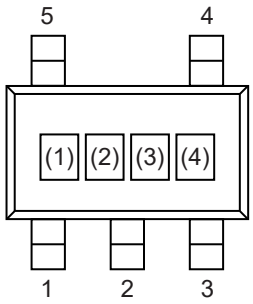

(1) to (3): Product code (Refer to **Product name vs. Product code**)
(4): Lot number

Product name vs. Product code

1. 1 S-1315 Series A type

Product Name	Product Code		
	(1)	(2)	(3)
S-1315A10-M5T1U3	W	J	A
S-1315A11-M5T1U3	W	J	B
S-1315A12-M5T1U3	W	J	C
S-1315A13-M5T1U3	W	J	D
S-1315A14-M5T1U3	W	J	E
S-1315A15-M5T1U3	W	J	F
S-1315A16-M5T1U3	W	J	G
S-1315A17-M5T1U3	W	J	H
S-1315A18-M5T1U3	W	J	I
S-1315A1J-M5T1U3	W	J	J
S-1315A19-M5T1U3	W	J	K
S-1315A20-M5T1U3	W	J	L
S-1315A21-M5T1U3	W	J	M
S-1315A22-M5T1U3	W	J	N
S-1315A23-M5T1U3	W	J	O
S-1315A24-M5T1U3	W	J	P
S-1315A25-M5T1U3	W	J	Q
S-1315A26-M5T1U3	W	J	R
S-1315A27-M5T1U3	W	J	S
S-1315A28-M5T1U3	W	J	T
S-1315A2J-M5T1U3	W	J	U
S-1315A29-M5T1U3	W	J	V
S-1315A30-M5T1U3	W	J	W
S-1315A31-M5T1U3	W	J	X
S-1315A32-M5T1U3	W	J	Y
S-1315A33-M5T1U3	W	J	Z
S-1315A34-M5T1U3	W	J	2
S-1315A35-M5T1U3	W	J	3
S-1315A36-M5T1U3	W	J	4
S-1315A37-M5T1U3	W	J	5
S-1315A38-M5T1U3	W	J	6
S-1315A39-M5T1U3	W	J	7
S-1315A40-M5T1U3	W	J	8
S-1315A41-M5T1U3	W	J	9
S-1315A42-M5T1U3	W	J	1

1. 2 S-1315 Series B type

Product Name	Product Code		
	(1)	(2)	(3)
S-1315B10-M5T1U3	W	K	A
S-1315B11-M5T1U3	W	K	B
S-1315B12-M5T1U3	W	K	C
S-1315B13-M5T1U3	W	K	D
S-1315B14-M5T1U3	W	K	E
S-1315B15-M5T1U3	W	K	F
S-1315B16-M5T1U3	W	K	G
S-1315B17-M5T1U3	W	K	H
S-1315B18-M5T1U3	W	K	I
S-1315B1J-M5T1U3	W	K	J
S-1315B19-M5T1U3	W	K	K
S-1315B20-M5T1U3	W	K	L
S-1315B21-M5T1U3	W	K	M
S-1315B22-M5T1U3	W	K	N
S-1315B23-M5T1U3	W	K	O
S-1315B24-M5T1U3	W	K	P
S-1315B25-M5T1U3	W	K	Q
S-1315B26-M5T1U3	W	K	R
S-1315B27-M5T1U3	W	K	S
S-1315B28-M5T1U3	W	K	T
S-1315B2J-M5T1U3	W	K	U
S-1315B29-M5T1U3	W	K	V
S-1315B30-M5T1U3	W	K	W
S-1315B31-M5T1U3	W	K	X
S-1315B32-M5T1U3	W	K	Y
S-1315B33-M5T1U3	W	K	Z
S-1315B34-M5T1U3	W	K	2
S-1315B35-M5T1U3	W	K	3
S-1315B36-M5T1U3	W	K	4
S-1315B37-M5T1U3	W	K	5
S-1315B38-M5T1U3	W	K	6
S-1315B39-M5T1U3	W	K	7
S-1315B40-M5T1U3	W	K	8
S-1315B41-M5T1U3	W	K	9
S-1315B42-M5T1U3	W	K	1

1. 3 S-1315 Series C type

Product Name	Product Code		
	(1)	(2)	(3)
S-1315C10-M5T1U3	W	L	A
S-1315C11-M5T1U3	W	L	B
S-1315C12-M5T1U3	W	L	C
S-1315C13-M5T1U3	W	L	D
S-1315C14-M5T1U3	W	L	E
S-1315C15-M5T1U3	W	L	F
S-1315C16-M5T1U3	W	L	G
S-1315C17-M5T1U3	W	L	H
S-1315C18-M5T1U3	W	L	I
S-1315C1J-M5T1U3	W	L	J
S-1315C19-M5T1U3	W	L	K
S-1315C20-M5T1U3	W	L	L
S-1315C21-M5T1U3	W	L	M
S-1315C22-M5T1U3	W	L	N
S-1315C23-M5T1U3	W	L	O
S-1315C24-M5T1U3	W	L	P
S-1315C25-M5T1U3	W	L	Q
S-1315C26-M5T1U3	W	L	R
S-1315C27-M5T1U3	W	L	S
S-1315C28-M5T1U3	W	L	T
S-1315C2J-M5T1U3	W	L	U
S-1315C29-M5T1U3	W	L	V
S-1315C30-M5T1U3	W	L	W
S-1315C31-M5T1U3	W	L	X
S-1315C32-M5T1U3	W	L	Y
S-1315C33-M5T1U3	W	L	Z
S-1315C34-M5T1U3	W	L	2
S-1315C35-M5T1U3	W	L	3
S-1315C36-M5T1U3	W	L	4
S-1315C37-M5T1U3	W	L	5
S-1315C38-M5T1U3	W	L	6
S-1315C39-M5T1U3	W	L	7
S-1315C40-M5T1U3	W	L	8
S-1315C41-M5T1U3	W	L	9
S-1315C42-M5T1U3	W	L	1

1. 4 S-1315 Series D type

Product Name	Product Code		
	(1)	(2)	(3)
S-1315D10-M5T1U3	W	M	A
S-1315D11-M5T1U3	W	M	B
S-1315D12-M5T1U3	W	M	C
S-1315D13-M5T1U3	W	M	D
S-1315D14-M5T1U3	W	M	E
S-1315D15-M5T1U3	W	M	F
S-1315D16-M5T1U3	W	M	G
S-1315D17-M5T1U3	W	M	H
S-1315D18-M5T1U3	W	M	I
S-1315D1J-M5T1U3	W	M	J
S-1315D19-M5T1U3	W	M	K
S-1315D20-M5T1U3	W	M	L
S-1315D21-M5T1U3	W	M	M
S-1315D22-M5T1U3	W	M	N
S-1315D23-M5T1U3	W	M	O
S-1315D24-M5T1U3	W	M	P
S-1315D25-M5T1U3	W	M	Q
S-1315D26-M5T1U3	W	M	R
S-1315D27-M5T1U3	W	M	S
S-1315D28-M5T1U3	W	M	T
S-1315D2J-M5T1U3	W	M	U
S-1315D29-M5T1U3	W	M	V
S-1315D30-M5T1U3	W	M	W
S-1315D31-M5T1U3	W	M	X
S-1315D32-M5T1U3	W	M	Y
S-1315D33-M5T1U3	W	M	Z
S-1315D34-M5T1U3	W	M	2
S-1315D35-M5T1U3	W	M	3
S-1315D36-M5T1U3	W	M	4
S-1315D37-M5T1U3	W	M	5
S-1315D38-M5T1U3	W	M	6
S-1315D39-M5T1U3	W	M	7
S-1315D40-M5T1U3	W	M	8
S-1315D41-M5T1U3	W	M	9
S-1315D42-M5T1U3	W	M	1

2. HSNT-6 (1212)

Top view

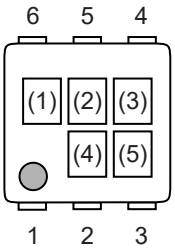

(1) to (3): Product code (Refer to **Product name vs. Product code**)
(4), (5): Lot number

Product name vs. Product code

2. 1 S-1315 Series A type

Product Name	Product Code		
	(1)	(2)	(3)
S-1315A10-A6T2U3	W	J	A
S-1315A11-A6T2U3	W	J	B
S-1315A12-A6T2U3	W	J	C
S-1315A13-A6T2U3	W	J	D
S-1315A14-A6T2U3	W	J	E
S-1315A15-A6T2U3	W	J	F
S-1315A16-A6T2U3	W	J	G
S-1315A17-A6T2U3	W	J	H
S-1315A18-A6T2U3	W	J	I
S-1315A1J-A6T2U3	W	J	J
S-1315A19-A6T2U3	W	J	K
S-1315A20-A6T2U3	W	J	L
S-1315A21-A6T2U3	W	J	M
S-1315A22-A6T2U3	W	J	N
S-1315A23-A6T2U3	W	J	O
S-1315A24-A6T2U3	W	J	P
S-1315A25-A6T2U3	W	J	Q
S-1315A26-A6T2U3	W	J	R
S-1315A27-A6T2U3	W	J	S
S-1315A28-A6T2U3	W	J	T
S-1315A2J-A6T2U3	W	J	U
S-1315A29-A6T2U3	W	J	V
S-1315A30-A6T2U3	W	J	W
S-1315A31-A6T2U3	W	J	X
S-1315A32-A6T2U3	W	J	Y
S-1315A33-A6T2U3	W	J	Z
S-1315A34-A6T2U3	W	J	2
S-1315A35-A6T2U3	W	J	3
S-1315A36-A6T2U3	W	J	4
S-1315A37-A6T2U3	W	J	5
S-1315A38-A6T2U3	W	J	6
S-1315A39-A6T2U3	W	J	7
S-1315A40-A6T2U3	W	J	8
S-1315A41-A6T2U3	W	J	9
S-1315A42-A6T2U3	W	J	1

2. 2 S-1315 Series B type

Product Name	Product Code		
	(1)	(2)	(3)
S-1315B10-A6T2U3	W	K	A
S-1315B11-A6T2U3	W	K	B
S-1315B12-A6T2U3	W	K	C
S-1315B13-A6T2U3	W	K	D
S-1315B14-A6T2U3	W	K	E
S-1315B15-A6T2U3	W	K	F
S-1315B16-A6T2U3	W	K	G
S-1315B17-A6T2U3	W	K	H
S-1315B18-A6T2U3	W	K	I
S-1315B1J-A6T2U3	W	K	J
S-1315B19-A6T2U3	W	K	K
S-1315B20-A6T2U3	W	K	L
S-1315B21-A6T2U3	W	K	M
S-1315B22-A6T2U3	W	K	N
S-1315B23-A6T2U3	W	K	O
S-1315B24-A6T2U3	W	K	P
S-1315B25-A6T2U3	W	K	Q
S-1315B26-A6T2U3	W	K	R
S-1315B27-A6T2U3	W	K	S
S-1315B28-A6T2U3	W	K	T
S-1315B2J-A6T2U3	W	K	U
S-1315B29-A6T2U3	W	K	V
S-1315B30-A6T2U3	W	K	W
S-1315B31-A6T2U3	W	K	X
S-1315B32-A6T2U3	W	K	Y
S-1315B33-A6T2U3	W	K	Z
S-1315B34-A6T2U3	W	K	2
S-1315B35-A6T2U3	W	K	3
S-1315B36-A6T2U3	W	K	4
S-1315B37-A6T2U3	W	K	5
S-1315B38-A6T2U3	W	K	6
S-1315B39-A6T2U3	W	K	7
S-1315B40-A6T2U3	W	K	8
S-1315B41-A6T2U3	W	K	9
S-1315B42-A6T2U3	W	K	1

2. 3 S-1315 Series C type

Product Name	Product Code		
	(1)	(2)	(3)
S-1315C10-A6T2U3	W	L	A
S-1315C11-A6T2U3	W	L	B
S-1315C12-A6T2U3	W	L	C
S-1315C13-A6T2U3	W	L	D
S-1315C14-A6T2U3	W	L	E
S-1315C15-A6T2U3	W	L	F
S-1315C16-A6T2U3	W	L	G
S-1315C17-A6T2U3	W	L	H
S-1315C18-A6T2U3	W	L	I
S-1315C1J-A6T2U3	W	L	J
S-1315C19-A6T2U3	W	L	K
S-1315C20-A6T2U3	W	L	L
S-1315C21-A6T2U3	W	L	M
S-1315C22-A6T2U3	W	L	N
S-1315C23-A6T2U3	W	L	O
S-1315C24-A6T2U3	W	L	P
S-1315C25-A6T2U3	W	L	Q
S-1315C26-A6T2U3	W	L	R
S-1315C27-A6T2U3	W	L	S
S-1315C28-A6T2U3	W	L	T
S-1315C2J-A6T2U3	W	L	U
S-1315C29-A6T2U3	W	L	V
S-1315C30-A6T2U3	W	L	W
S-1315C31-A6T2U3	W	L	X
S-1315C32-A6T2U3	W	L	Y
S-1315C33-A6T2U3	W	L	Z
S-1315C34-A6T2U3	W	L	2
S-1315C35-A6T2U3	W	L	3
S-1315C36-A6T2U3	W	L	4
S-1315C37-A6T2U3	W	L	5
S-1315C38-A6T2U3	W	L	6
S-1315C39-A6T2U3	W	L	7
S-1315C40-A6T2U3	W	L	8
S-1315C41-A6T2U3	W	L	9
S-1315C42-A6T2U3	W	L	1

2. 4 S-1315 Series D type

Product Name	Product Code		
	(1)	(2)	(3)
S-1315D10-A6T2U3	W	M	A
S-1315D11-A6T2U3	W	M	B
S-1315D12-A6T2U3	W	M	C
S-1315D13-A6T2U3	W	M	D
S-1315D14-A6T2U3	W	M	E
S-1315D15-A6T2U3	W	M	F
S-1315D16-A6T2U3	W	M	G
S-1315D17-A6T2U3	W	M	H
S-1315D18-A6T2U3	W	M	I
S-1315D1J-A6T2U3	W	M	J
S-1315D19-A6T2U3	W	M	K
S-1315D20-A6T2U3	W	M	L
S-1315D21-A6T2U3	W	M	M
S-1315D22-A6T2U3	W	M	N
S-1315D23-A6T2U3	W	M	O
S-1315D24-A6T2U3	W	M	P
S-1315D25-A6T2U3	W	M	Q
S-1315D26-A6T2U3	W	M	R
S-1315D27-A6T2U3	W	M	S
S-1315D28-A6T2U3	W	M	T
S-1315D2J-A6T2U3	W	M	U
S-1315D29-A6T2U3	W	M	V
S-1315D30-A6T2U3	W	M	W
S-1315D31-A6T2U3	W	M	X
S-1315D32-A6T2U3	W	M	Y
S-1315D33-A6T2U3	W	M	Z
S-1315D34-A6T2U3	W	M	2
S-1315D35-A6T2U3	W	M	3
S-1315D36-A6T2U3	W	M	4
S-1315D37-A6T2U3	W	M	5
S-1315D38-A6T2U3	W	M	6
S-1315D39-A6T2U3	W	M	7
S-1315D40-A6T2U3	W	M	8
S-1315D41-A6T2U3	W	M	9
S-1315D42-A6T2U3	W	M	1

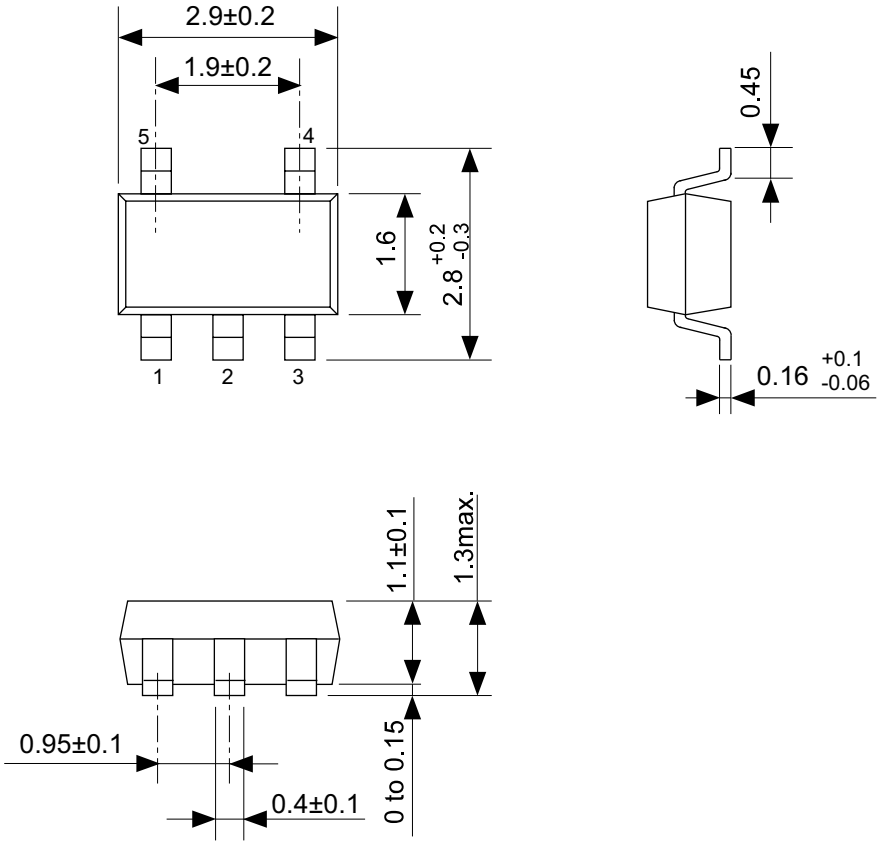

No. MP005-A-P-SD-1.3

TITLE	SOT235-A-PKG Dimensions
No.	MP005-A-P-SD-1.3
ANGLE	
UNIT	mm

ABLIC Inc.

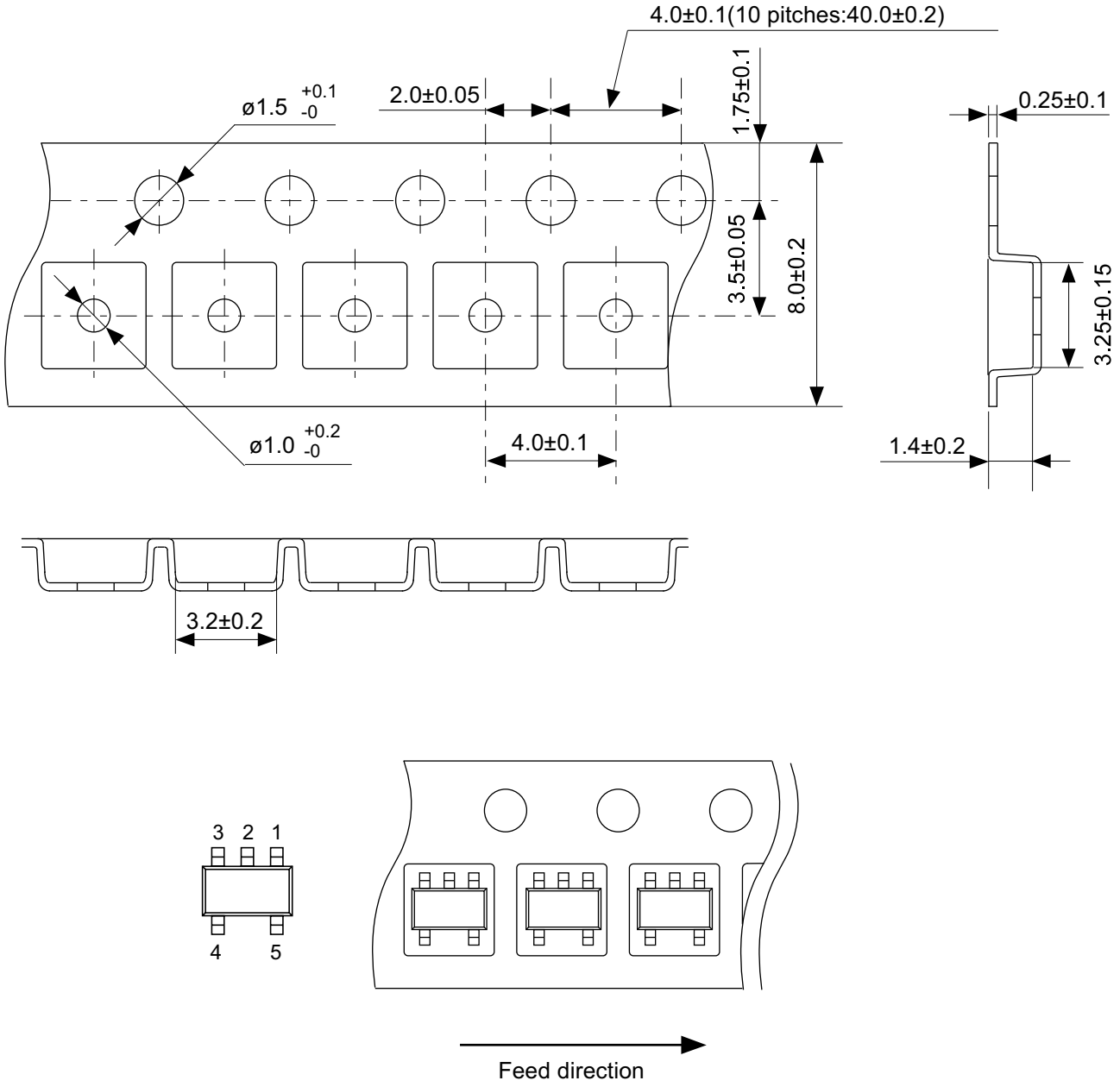

No. MP005-A-C-SD-2.1

TITLE	SOT235-A-Carrier Tape
No.	MP005-A-C-SD-2.1
ANGLE	
UNIT	mm
ABLIC Inc.	

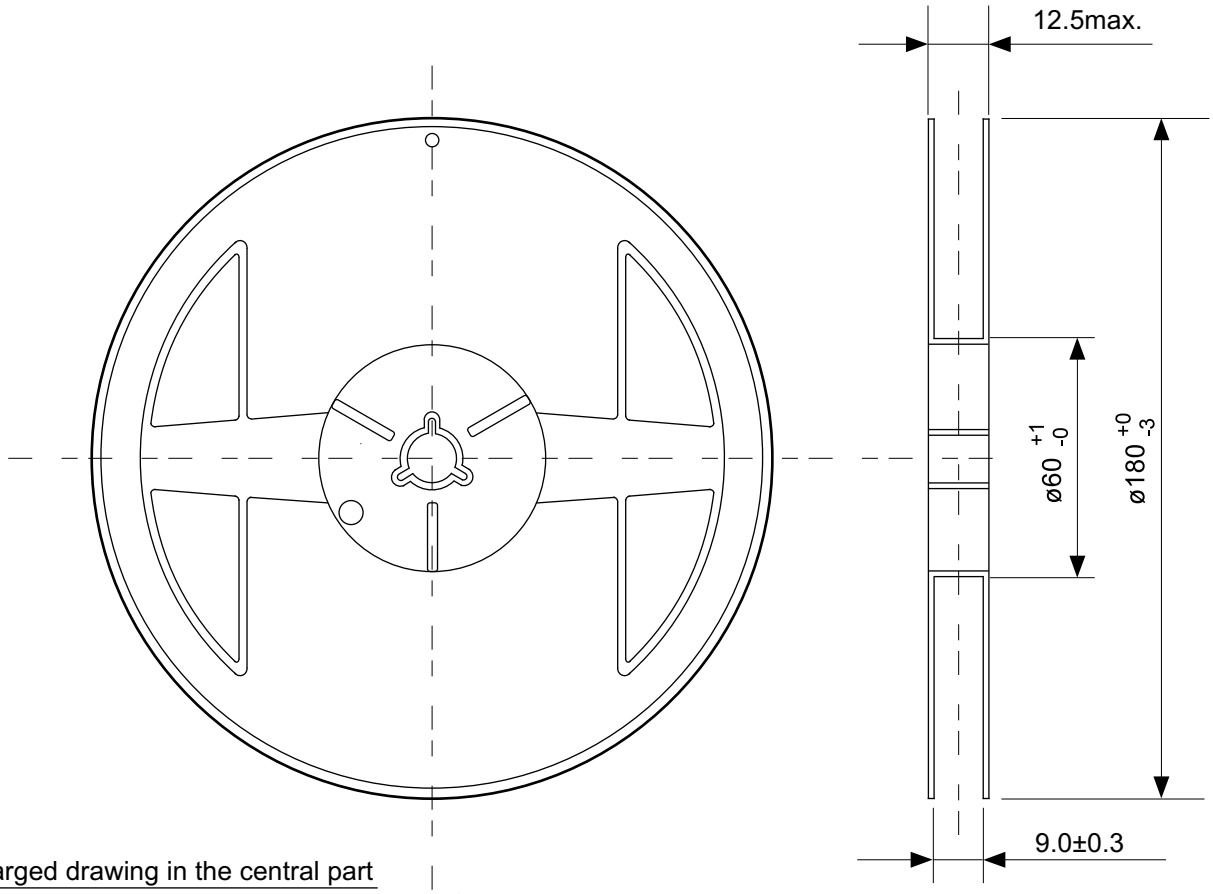

Enlarged drawing in the central part

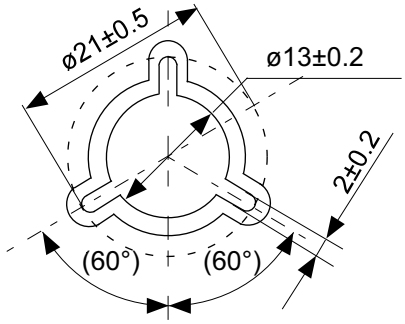

No. MP005-A-R-SD-1.1

TITLE	SOT235-A-Reel		
No.	MP005-A-R-SD-1.1		
ANGLE		QTY.	3,000
UNIT	mm		
ABLIC Inc.			

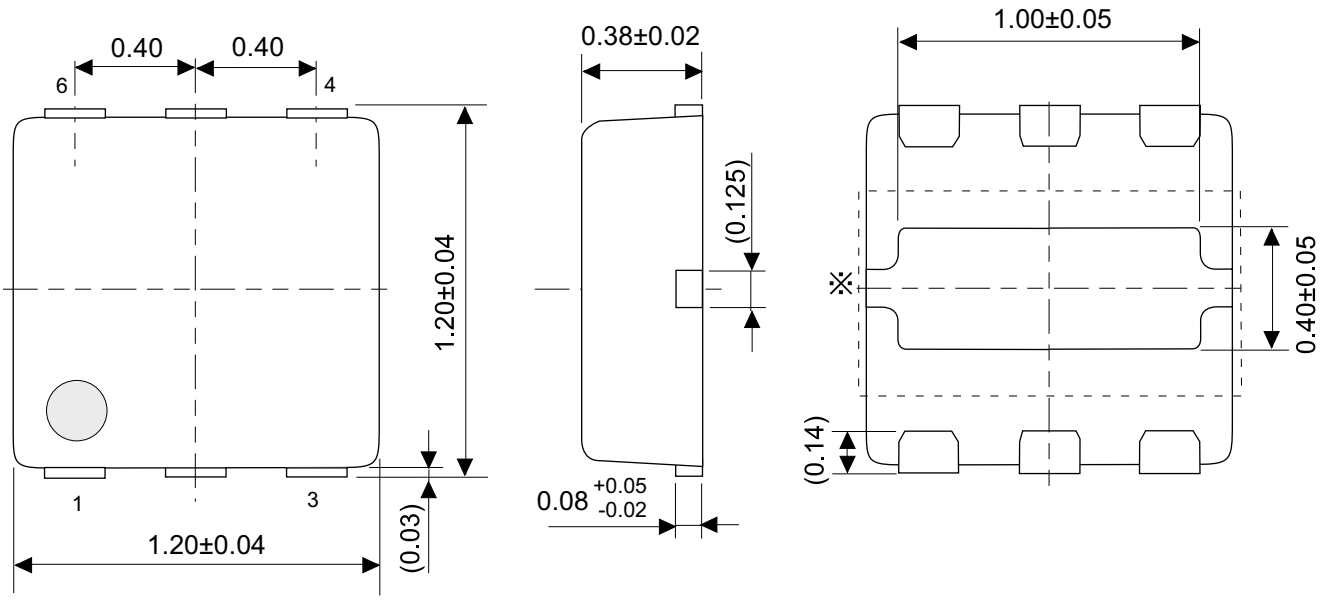

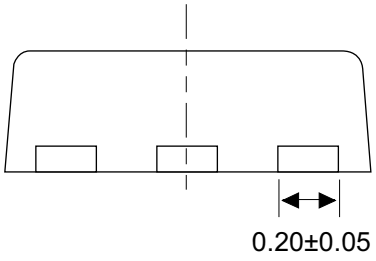

※ The heat sink of back side has different electric potential depending on the product.
Confirm specifications of each product.
Do not use it as the function of electrode.

No. PM006-A-P-SD-1.1

TITLE	HSNT-6-B-PKG Dimensions
No.	PM006-A-P-SD-1.1
ANGLE	
UNIT	mm

ABLIC Inc.

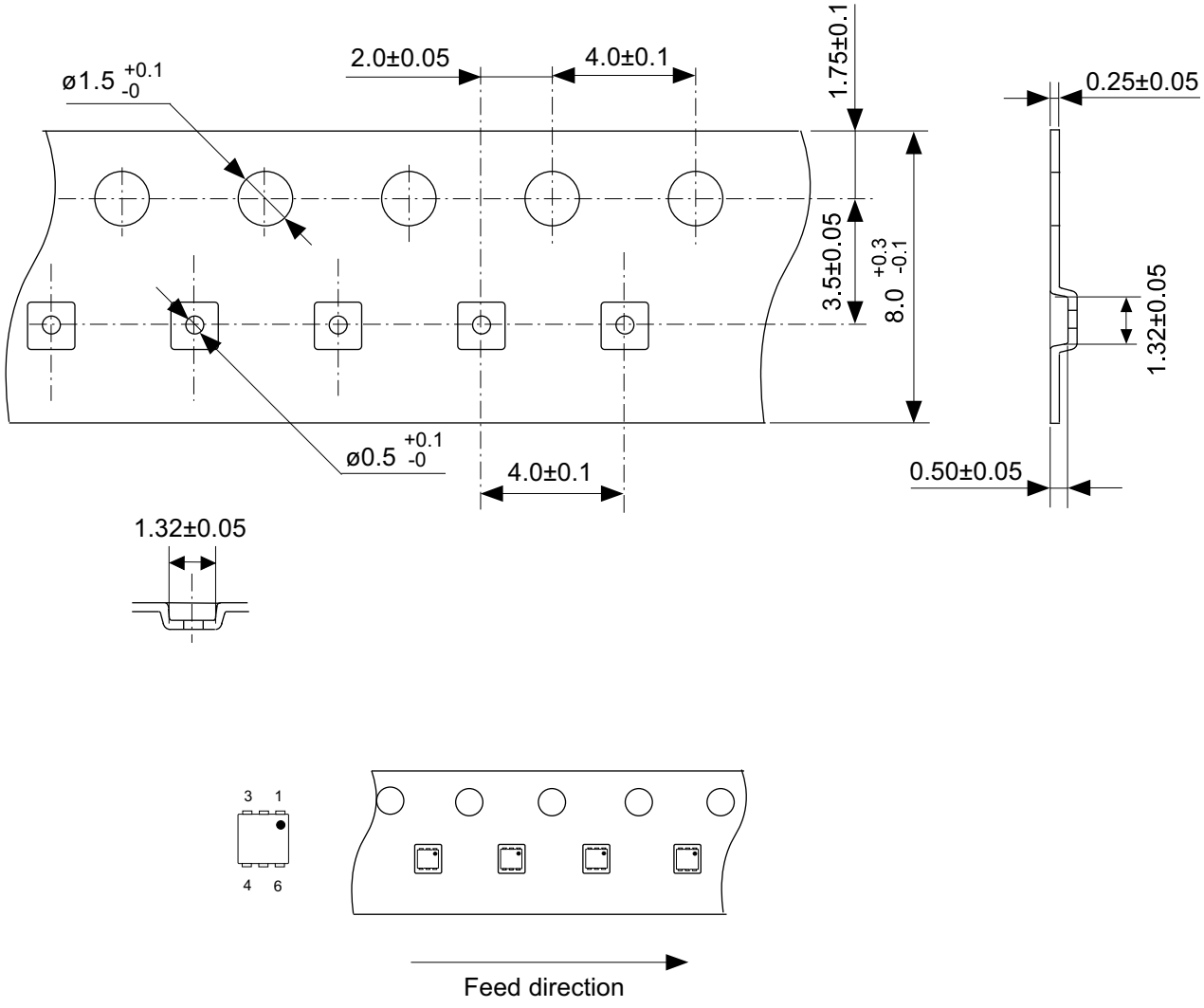

No. PM006-A-C-SD-2.0

TITLE	HSNT-6-B-Carrier Tape
No.	PM006-A-C-SD-2.0
ANGLE	
UNIT	mm
ABLIC Inc.	

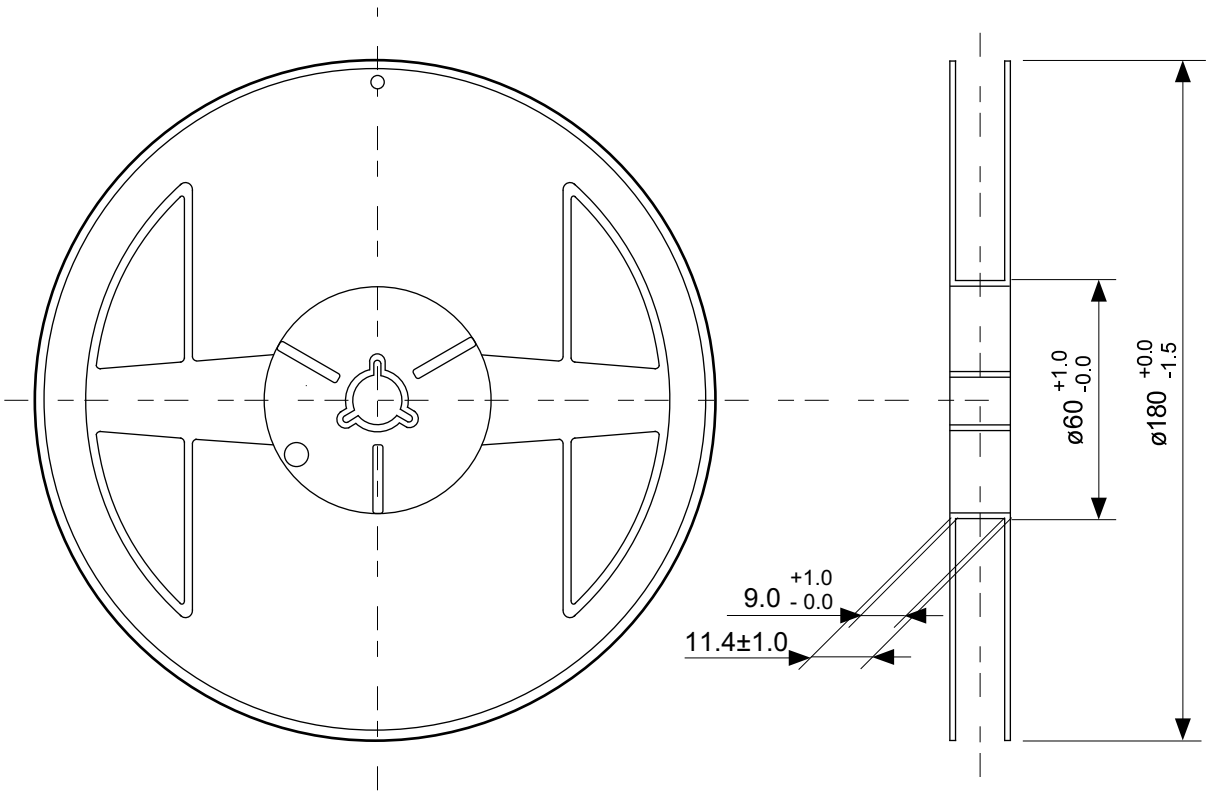

Enlarged drawing in the central part

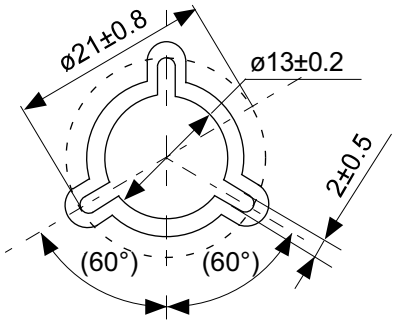

No. PM006-A-R-SD-1.0

TITLE	HSNT-6-B-Reel		
No.	PM006-A-R-SD-1.0		
ANGLE		QTY.	5,000
UNIT	mm		
ABLIC Inc.			

Land Pattern

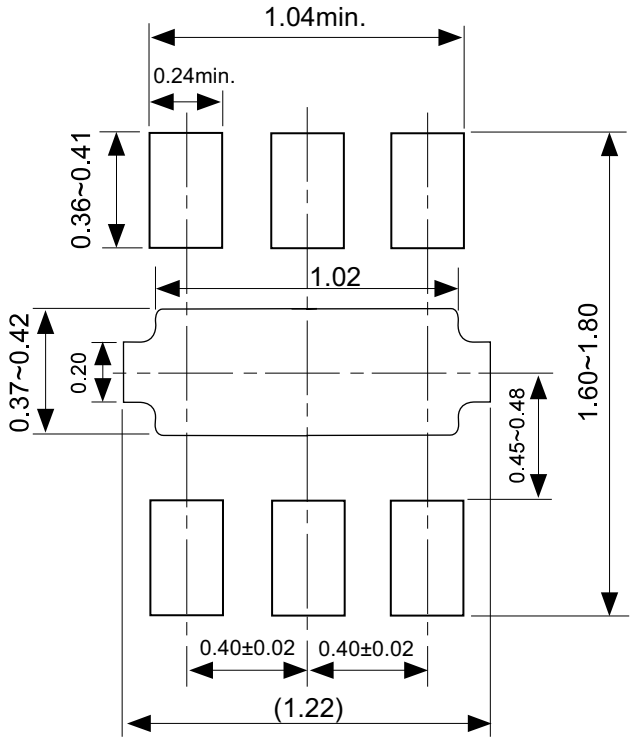

Caution It is recommended to solder the heat sink to a board in order to ensure the heat radiation.

注意　放熱性を確保する為に、PKGの裏面放熱板（ヒートシンク）を基板に半田付けする事を推奨いたします。

Metal Mask Pattern

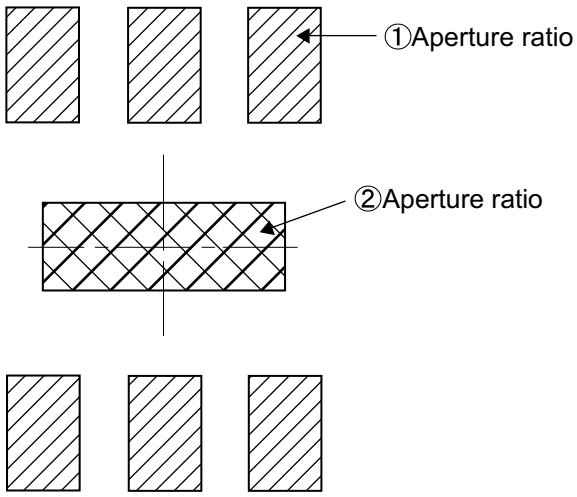

Caution ① Mask aperture ratio of the lead mounting part is 100%.
② Mask aperture ratio of the heat sink mounting part is 40%.
③ Mask thickness: t0.10mm to 0.12 mm

注意 ①リード実装部のマスク開口率は100%です。
②放熱板実装のマスク開口率は40%です。
③マスク厚み：t0.10mm ~ 0.12 mm

No. PM006-A-L-SD-2.0

TITLE	HSNT-6-B -Land Recommendation
No.	PM006-A-L-SD-2.0
ANGLE	
UNIT	mm
ABLIC Inc.	

Disclaimers (Handling Precautions)

1. All the information described herein (product data, specifications, figures, tables, programs, algorithms and application circuit examples, etc.) is current as of publishing date of this document and is subject to change without notice.
2. The circuit examples and the usages described herein are for reference only, and do not guarantee the success of any specific mass-production design.
   ABLIC Inc. is not responsible for damages caused by the reasons other than the products described herein (hereinafter "the products") or infringement of third-party intellectual property right and any other right due to the use of the information described herein.
3. ABLIC Inc. is not responsible for damages caused by the incorrect information described herein.
4. Be careful to use the products within their specified ranges. Pay special attention to the absolute maximum ratings, operation voltage range and electrical characteristics, etc.
   ABLIC Inc. is not responsible for damages caused by failures and / or accidents, etc. that occur due to the use of the products outside their specified ranges.
5. When using the products, confirm their applications, and the laws and regulations of the region or country where they are used and verify suitability, safety and other factors for the intended use.
6. When exporting the products, comply with the Foreign Exchange and Foreign Trade Act and all other export-related laws, and follow the required procedures.
7. The products must not be used or provided (exported) for the purposes of the development of weapons of mass destruction or military use. ABLIC Inc. is not responsible for any provision (export) to those whose purpose is to develop, manufacture, use or store nuclear, biological or chemical weapons, missiles, or other military use.
8. The products are not designed to be used as part of any device or equipment that may affect the human body, human life, or assets (such as medical equipment, disaster prevention systems, security systems, combustion control systems, infrastructure control systems, vehicle equipment, traffic systems, in-vehicle equipment, aviation equipment, aerospace equipment, and nuclear-related equipment), excluding when specified for in-vehicle use or other uses. Do not apply the products to the above listed devices and equipments without prior written permission by ABLIC Inc.
   Especially, the products cannot be used for life support devices, devices implanted in the human body and devices that directly affect human life, etc.
   Prior consultation with our sales office is required when considering the above uses.
   ABLIC Inc. is not responsible for damages caused by unauthorized or unspecified use of our products.
9. Semiconductor products may fail or malfunction with some probability.
   The user of the products should therefore take responsibility to give thorough consideration to safety design including redundancy, fire spread prevention measures, and malfunction prevention to prevent accidents causing injury or death, fires and social damage, etc. that may ensue from the products' failure or malfunction.
   The entire system must be sufficiently evaluated and applied on customer's own responsibility.
10. The products are not designed to be radiation-proof. The necessary radiation measures should be taken in the product design by the customer depending on the intended use.
11. The products do not affect human health under normal use. However, they contain chemical substances and heavy metals and should therefore not be put in the mouth. The fracture surfaces of wafers and chips may be sharp. Be careful when handling these with the bare hands to prevent injuries, etc.
12. When disposing of the products, comply with the laws and ordinances of the country or region where they are used.
13. The information described herein contains copyright information and know-how of ABLIC Inc.
    The information described herein does not convey any license under any intellectual property rights or any other rights belonging to ABLIC Inc. or a third party. Reproduction or copying of the information from this document or any part of this document described herein for the purpose of disclosing it to a third-party without the express permission of ABLIC Inc. is strictly prohibited.
14. For more details on the information described herein, contact our sales office.

2.2-2018.06