Product data sheet
Characteristics

RXM4AB2BDPVM
Harmony, Miniature plug-in relay pre-assembled, 6 A, 4 CO, with LED, with lockable test button, mixed terminals socket, 24 V DC

Product availability : Non-Stock - Not normally stocked in distribution facility

Green Premium™

Price* : 24.68 USD



Main

Range of product	Harmony Electromechanical Relays
Series name	Miniature
Product or component type	Pre-assembled plug-in relay with socket
Device short name	RXM
Contacts type and composition	4 C/O
[Uc] control circuit voltage	24 V DC
[Ithe] conventional enclosed thermal current	6 A -40…131 °F (-40…55 °C)
Status LED	With
Control type	Lockable test button
Utilisation coefficient	20 %

Complementary

[Ui] rated insulation voltage	250 V IEC
[Uimp] rated impulse withstand voltage	2.5 kV 1.2/50 µs
Contacts material	AgNi
[Ie] rated operational current	3 A 28 V DC) NC IEC 3 A 250 V AC) NC IEC 6 A 28 V DC) NO IEC 6 A 250 V AC) NO IEC 6 A 277 V AC) UL 8 A 30 V DC) UL
Minimum switching current	10 mA
Maximum switching voltage	250 V
Minimum switching voltage	17 V

* Price is “List Price” and may be subject to a trade discount – check with your local distributor or retailer for actual price.

Disclaimer: This documentation is not intended as a substitute for and is not to be used for determining suitability or reliability of these products for specific user applications

Resistive rated load	6 A 250 V AC 6 A 28 V DC
Maximum switching capacity	1500 VA/168 W AC/DC
Minimum switching capacity	170 mW 10 mA, 17 V
Operating rate	<= 1200 cycles/hour under load <= 18000 cycles/hour no-load
Mechanical durability	10000000 cycles
Electrical durability	100000 cycles resistive
Average coil consumption in W	0.9 W, DC
Drop-out voltage threshold	>= 0.1 Uc DC
Operate time	20 ms
Release time	20 ms
Average coil resistance	650 Ohm 20 °C +/- 10 %
Rated operational voltage limits	19.2...26.4 V DC
Safety reliability data	B10d = 100000
Protection category	RT I
Test levels	Level A
Operating position	Any position
Sale per indivisible quantity	30
CAD overall width	1.06 in (26.9 mm)
CAD overall height	3.11 in (79 mm)
CAD overall depth	3.09 in (78.45 mm)
Connections - terminals	Connector, 1 x 0.25...1 x 2.5 mm² AWG 22...AWG 14) flexible with cable end Connector, 2 x 0.25...2 x 1 mm² AWG 22...AWG 17) flexible with cable end Connector, 1 x 0.5...1 x 2.5 mm² AWG 20...AWG 14) solid without cable end Connector, 2 x 0.5...2 x 1.5 mm² AWG 20...AWG 16) solid without cable end
Torque value	8.85 lbf.in (1 N.m)
Net weight	0.21 lb(US) (0.096 kg)
Device presentation	Complete product

Environment

Dielectric strength	1300 V AC between contacts with micro disconnection 2000 V AC between coil and contact 2000 V AC between poles
Product certifications	CE UL CSA EAC Lloyd's
Standards	UL 508 EN/IEC 61810-1 CSA C22.2 No 14 IEC 61984
Ambient air temperature for storage	-40…185 °F (-40…85 °C)
Ambient air temperature for operation	-40…131 °F (-40…55 °C)
Vibration resistance	3 gn +/- 1 mm 10…150 Hz)5 cycles in operation 5 gn +/- 1 mm 10…150 Hz)5 cycles not operating
IP degree of protection	IP20 conforming to EN/IEC 60529
Shock resistance	10 gnin operation 30 gnnot operating
Pollution degree	2

Ordering and shipping details

Category	21127 - ZELIO ICE CUBE RELAYS
Discount Schedule	CP2
GTIN	03606489563097
Nbr. of units in pkg.	1

Package weight(Lbs)	3.49 oz (99 g)
Returnability	No

Packing Units

Unit Type of Package 1	PCE
Package 1 Height	3.11 in (7.9 cm)
Package 1 width	1.06 in (2.69 cm)
Package 1 Length	3.09 in (7.845 cm)

Offer Sustainability

Sustainable offer status	Green Premium product
California proposition 65	WARNING: This product can expose you to chemicals including: Nickel compounds, which is known to the State of California to cause cancer, and Di-isodecyl phthalate (DIDP), which is known to the State of California to cause birth defects or other reproductive harm. For more information go to www.P65Warnings.ca.gov
REACh Regulation	REACh Declaration
REACh free of SVHC	Yes
EU RoHS Directive	Pro-active compliance (Product out of EU RoHS legal scope) EU RoHS Declaration
Toxic heavy metal free	Yes
Mercury free	Yes
RoHS exemption information	Yes
China RoHS Regulation	China RoHS declaration
Environmental Disclosure	Product Environmental Profile
WEEE	The product must be disposed on European Union markets following specific waste collection and never end up in rubbish bins.

Contractual warranty

Warranty	18 Months

RXM4AB2BDPVM

Dimensions

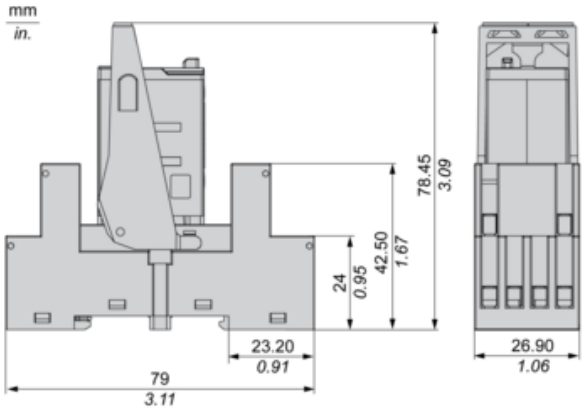

RXM4AB2BDPVM

Wiring Diagram



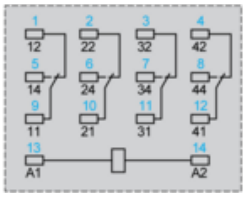

Symbols shown in blue correspond to Nema marking.

Electrical Durability of Contacts

Durability (inductive load) = durability (resistive load) x reduction coefficient.

Resistive AC load

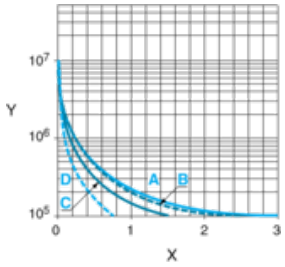

X Switching capacity (kVA)

Y Durability (Number of operating cycles)

A RXM2AB•••

B RXM3AB•••

C RXM4AB•••

D RXM4GB•••

Reduction coefficient for inductive AC load (depending on power factor cos ϕ)

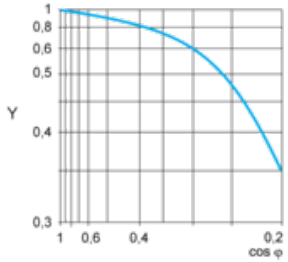

Y Reduction coefficient (A)

Maximum switching capacity on resistive DC load

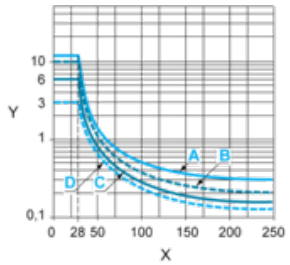

X Voltage DC

Y Current DC

A RXM2AB•••

B RXM3AB•••

C RXM4AB•••

D RXM4GB•••

Note : These are typical curves, actual durability depends on load, environment, duty cycle, etc.