Linx TECHNOLOGIES

KH3 Series Transmitter Module Data Guide

Wireless made simple®

Warning: Some customers may want Linx radio frequency ("RF") products to control machinery or devices remotely, including machinery or devices that can cause death, bodily injuries, and/or property damage if improperly or inadvertently triggered, particularly in industrial settings or other applications implicating life-safety concerns ("Life and Property Safety Situations").

NO OEM LINX REMOTE CONTROL OR FUNCTION MODULE SHOULD EVER BE USED IN LIFE AND PROPERTY SAFETY SITUATIONS. No OEM Linx Remote Control or Function Module should be modified for Life and Property Safety Situations. Such modification cannot provide sufficient safety and will void the product's regulatory certification and warranty.

Customers may use our (non-Function) Modules, Antenna and Connectors as part of other systems in Life Safety Situations, but only with necessary and industry appropriate redundancies and in compliance with applicable safety standards, including without limitation, ANSI and NFPA standards. It is solely the responsibility of any Linx customer who uses one or more of these products to incorporate appropriate redundancies and safety standards for the Life and Property Safety Situation application.

Do not use this or any Linx product to trigger an action directly from the data line or RSSI lines without a protocol or encoder/decoder to validate the data. Without validation, any signal from another unrelated transmitter in the environment received by the module could inadvertently trigger the action.

All RF products are susceptible to RF interference that can prevent communication. RF products without frequency agility or hopping implemented are more subject to interference. This module does not have a frequency hopping protocol built in.

Do not use any Linx product over the limits in this data guide. Excessive voltage or extended operation at the maximum voltage could cause product failure. Exceeding the reflow temperature profile could cause product failure which is not immediately evident.

Do not make any physical or electrical modifications to any Linx product. This will void the warranty and regulatory and UL certifications and may cause product failure which is not immediately evident.

Table of Contents

1 Description
1 Features
1 Applications
2 Ordering Information
2 Absolute Maximum Ratings
3 Electrical Specifications
4 Typical Performance Graphs
8 Pin Assignments
8 Pin Descriptions
9 Module Description
10 Theory of Operation
10 Compatibility with the KH2 Series
11 Encoder Operation
12 Setting the Transmitter Address
12 Data Inputs
12 Enabling Transmission
12 Input Type Selection
14 Using LADJ
14 Power Supply Requirements
15 Typical Applications
16 Antenna Considerations
17 Helpful Application Notes from Linx
18 Interference Considerations
19 Pad Layout
19 Board Layout Guidelines
21 Microstrip Details
22 Production Guidelines
22 Hand Assembly
22 Automated Assembly

24 General Antenna Rules
26 Common Antenna Styles
28 Regulatory Considerations
30 Notes

KH3 Series Transmitter Module

Data Guide

Description

The KH3 Series is ideally suited for volume use in OEM applications such as remote control and command, and keyless entry. Housed in a compact SMD package, it combines a highly optimized RF transmitter with an on-board encoder. When paired with a matching KH3 Series receiver / decoder module, a reliable wireless link is formed, capable of transferring the status of 8 parallel inputs over distances of up to 3,000 feet.

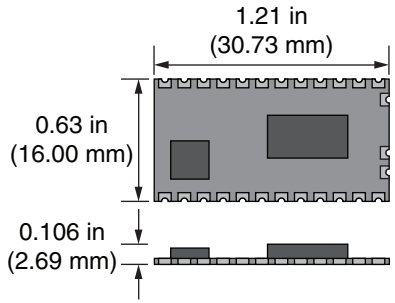

Figure 1: Package Dimensions

Ten address lines provide transmitter uniqueness. No external RF components are required except an antenna, making integration straightforward.

Features

- Low cost
- On-board encoder
- 8 parallel binary inputs
- 10 addresses for security and uniqueness
- No external RF components required
- Ultra-low power consumption
- Compact SMD package
- Stable SAW-based architecture
- Adjustable output power
- Transmit enable line
- No production tuning

Applications

- Remote control / command
- Gate openers
- Lighting control
- Call systems
- Remote status monitoring
- Home / industrial automation
- Remote status / position sensing
- Wire elimination

Revised 3/18/2015

Ordering Information

Ordering Information	
Part Number	**Description**
TXM-315-KH3	315MHz Transmitter / Encoder
TXM-418-KH3	418MHz Transmitter / Encoder
TXM-433-KH3	433MHz Transmitter / Encoder
RXM-315-KH3	315MHz Receiver / Decoder
RXM-418-KH3	418MHz Receiver / Decoder
RXM-433-KH3	433MHz Receiver / Decoder
EVAL-***-KH3	KH3 Series Basic Evaluation Kit

*** = 315, 418 (Standard), 433MHz
Transmitters are supplied in tubes of 20 pcs.

Figure 2: Ordering Information

Absolute Maximum Ratings

Absolute Maximum Ratings				
Supply Voltage V_{cc}	–0.3	to	+6.0	VDC
Any Input or Output Pin	–0.3	to	V_{CC}	VDC
Operating Temperature	–40	to	+85	ºC
Storage Temperature	–55	to	+125	ºC
Soldering Temperature	+225ºC for 10 seconds			

Exceeding any of the limits of this section may lead to permanent damage to the device. Furthermore, extended operation at these maximum ratings may reduce the life of this device.

Figure 3: Absolute Maximum Ratings

Warning: This product incorporates numerous static-sensitive components. Always wear an ESD wrist strap and observe proper ESD handling procedures when working with this device. Failure to observe this precaution may result in module damage or failure.

Electrical Specifications

KH3 Series Transmitter Specifications						
Parameter	**Symbol**	**Min.**	**Typ.**	**Max.**	**Units**	**Notes**
Power Supply						
Operating Voltage	V_{CC}	2.7		5.2	VDC	
Average TX Supply Current	I_{TX}					
At 3.3dBm			2.7		mA	1,2,4
At 0dBm			1.5		mA	1,2,3,4
Power-Down Current	I_{PDN}		1.0		µA	
Transmitter Section						
Transmit Frequency	F_C					
TXM-315-KH3			315		MHz	
TXM-418-KH3			418		MHz	
TXM-433-KH3			433.92		MHz	
Center Frequency Accuracy		–75		+75	kHz	2,4
Output Power	P_O	–4	–1	+4	dBm	2,3
Harmonic Emissions	P_H			–36	dBc	2
Antenna Port						
RF Impedance	R_{IN}		50		Ω	
Encoder						
Data Length			26 bits 3x			
Average Data Duty cycle			50%			5
Data Input						
Logic Low		0.0		$0.2xV_{CC}$	VDC	5
Logic High		$V_{CC}x0.8$		V_{CC}	VDC	5
Input Sink Current		0.6	0.1	5	µA	5
Environmental						
Operating Temp. Range		–30		+70	ºC	5

1. Curent draw with 50% mark/space ratio
2. Into a 50Ω load
3. With a 430Ω resistor on LADJ
4. At 3V and 25ºC
5. Characterized, but not tested

Figure 4: Electrical Specifications

Typical Performance Graphs

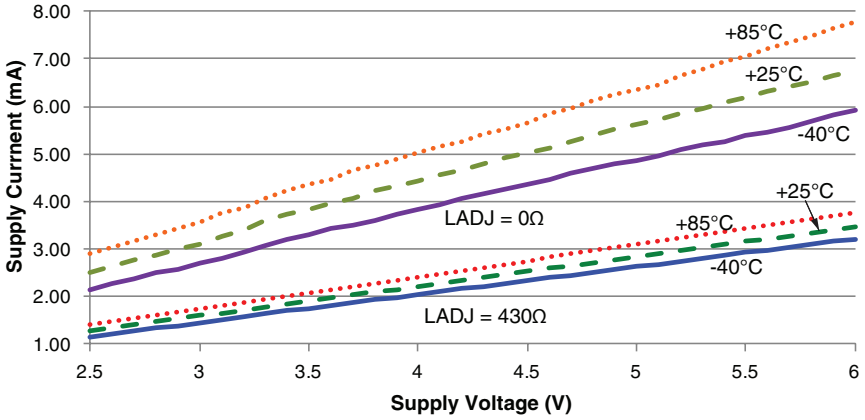

Figure 5: TXM-315-KH3 Transmitter Supply Current vs. Supply Voltage

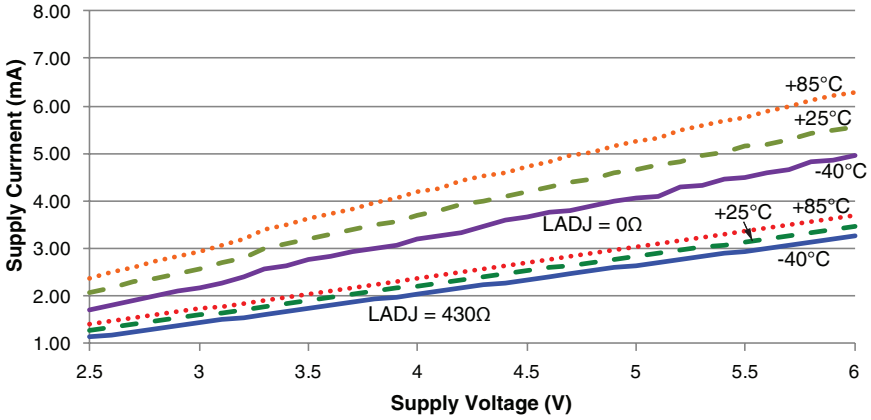

Figure 6: TXM-418-KH3 Transmitter Supply Current vs. Supply Voltage

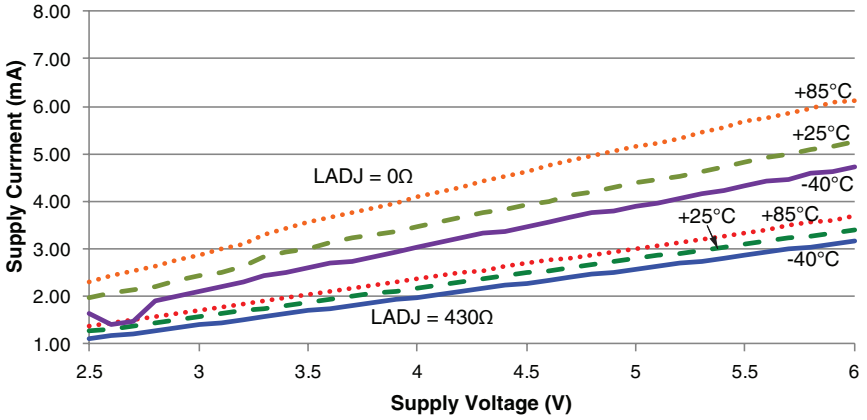

Figure 7: TXM-433-KH3 Transmitter Supply Current vs. Supply Voltage

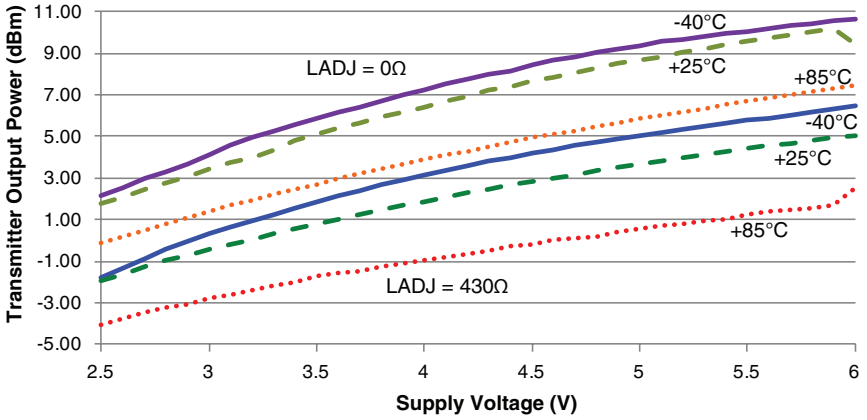

Figure 8: TXM-315-KH3 Transmitter Output Power vs. Supply Voltage

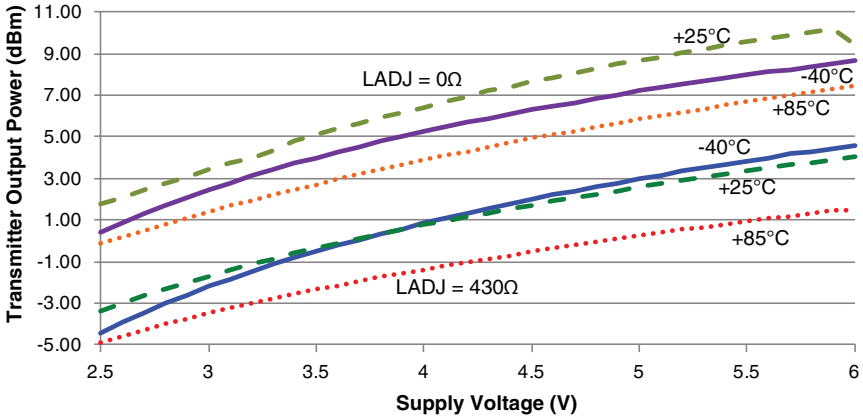

Figure 9: TXM-418-KH3 Transmitter Output Power vs. Supply Voltage

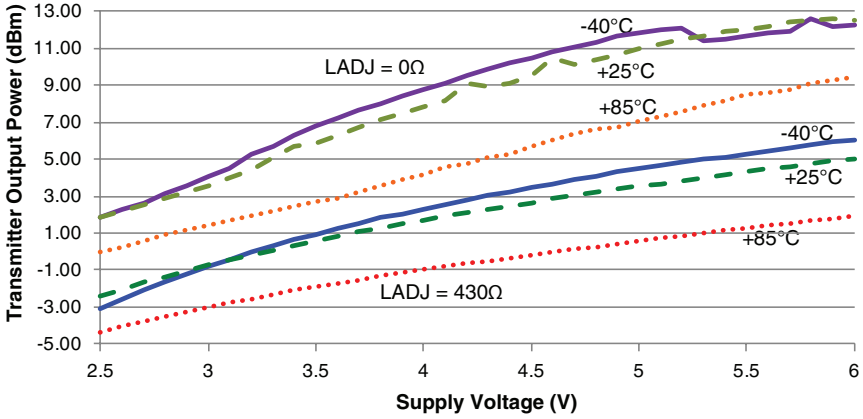

Figure 10: TXM-433-KH3 Transmitter Output Power vs. Supply Voltage

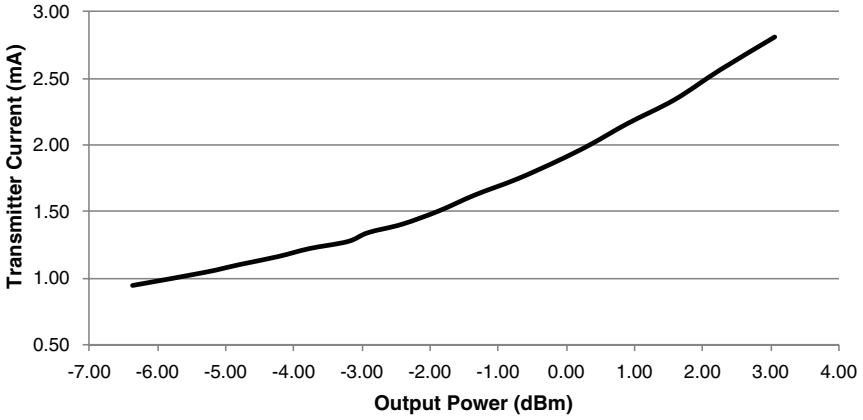

Figure 11: KH3 Series Transmitter Output Power vs. Supply Current at 3.0V

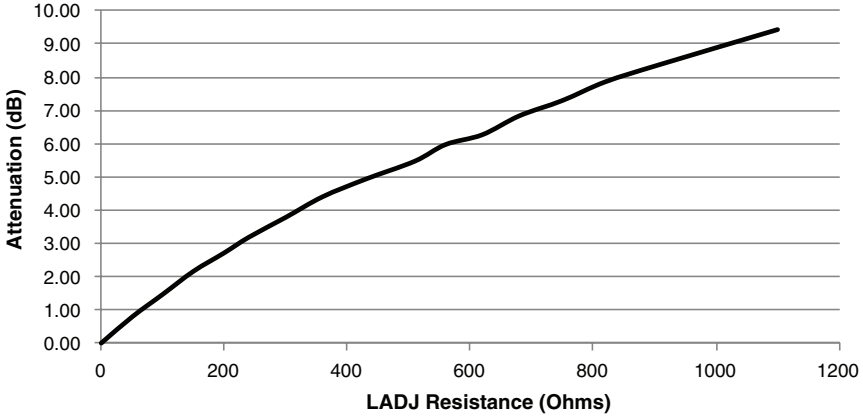

Figure 12: KH3 Series Transmitter Output Power Attenuation vs. LADJ Resistor

Pin Assignments

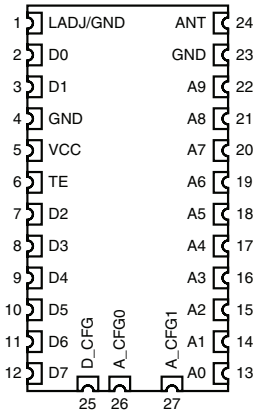

Figure 13: KH3 Series Transmitter Pin Assignments (Top View)

Pin Descriptions

Pin Descriptions

Pin Number	Name	I/O	Description
1	GND / LADJ	—	Level Adjust. This line adjusts the output power level of the transmitter. Connecting to GND gives the highest output, while placing a resistor to GND lowers the output level.
2, 3, 7, 8, 9, 10, 11,12	D0 to D1	I	Data Input Lines. When TE goes high, the module encodes the state of these lines for transmission. Upon receipt of a valid transmission, the receiver / decoder replicates these lines on its output lines. These lines are pulled to GND internally.
4, 23	GND	—	Analog Ground
5	V_{CC}	—	Supply Voltage
6	TE	I/O	Transmit Enable Line. When this line goes high, the module encodes the states of the address and data lines into a packet and transmits the packet three times.
13, 14, 15, 16, 17, 18, 19, 20, 21, 22	A0 to A9	I	Address Lines. The state of these lines must match the state of the receiver's address lines in order for a transmission to be accepted. These lines are pulled to V_{CC} internally.
24	ANT	—	50-ohm RF Output
25	D_CFG	I/O	Data Line Configuration. Determines whether a low on a data line is interpreted as a zero bit or an open bit. See the Input Type Selection section. This line is pulled to GND internally.
26, 27	A_CFG0 / A_CFG1		Address Configuration. These lines determine the address bit type interpretation. See the Input Type Selection section. A_CFG0 is pulled to GND and A_CFG1 is pulled to V_{CC} internally.

Figure 14: KH3 Series Transmitter Pin Descriptions

Module Description

The KH3 Series transmitter / encoder module combines a high-performance Surface Acoustic Wave (SAW) based transmitter with an on-board remote control encoder. When combined with a Linx KH3 Series receiver / decoder, a highly reliable RF link capable of transferring control or command data over line-of-sight distances of up to 3,000 feet is formed. The module accepts up to 8 parallel inputs, such as switches or contact closures, and provides ten address lines for creating unique transmitter / receiver relationships. The KH3's compact surface-mount package integrates easily into existing designs and is friendly to hand production or automated assembly.

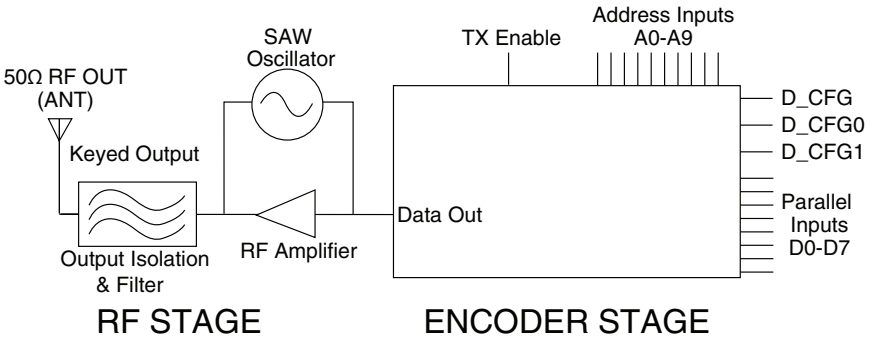

Figure 15: KH3 Series Transmitter Block Diagram

Theory of Operation

The KH3 Series transmitter operation is straightforward. When the Transmit Enable (TE) line is taken high, the on-board encoder IC is activated. The encoder detects the logic states of the data and address lines. These states are formatted into a 3-word transmission, which continues until the TE line is taken low. The encoder creates a serial data packet that is used to modulate the transmitter.

The transmitter section is based on a simple, but highly-optimized, architecture that achieves a high fundamental output power with low harmonic content. This ensures that most approval standards can be met without external filter components. The KH3 Series transmitter is exceptionally stable over variations in time, temperature, and physical shock as a result of the precision SAW device that is incorporated as the frequency reference.

The transmitted signal may be received by a Linx KH3 Series receiver / decoder module or a Linx LR Series receiver combined with the appropriate decoder IC. Once data is received, it is decoded using a decoder IC or custom microcontroller. The transmitted address bits are checked against the address settings of the receiving device. If a match is confirmed, the decoder's outputs are set to replicate the transmitter's inputs.

Compatibility with the KH2 Series

The Legacy KH2 Series used encoders and decoders for Holtek® and the KH3 migrates to the Linx DS Series encoder and decoder. The protocol and functionality are compatible. There is some difference in the hardware set-up for the address lines and the data lines. The legacy Holtek® products used tri-state lines, so high, low and floating were each valid states. The DS Series has bi-state lines; high and low only. Three lines have been added to the KH3 module to allow for the selection of how the address and data line states are interpreted. Please see the Input Type Selection section for more details.

The KH3 transmitter has been designed to be compatible with legacy systems. The module has been configured for the most common use of the KH2 so that it can be placed on existing boards without modification. This makes the KH3 a drop-in replacement for most applications.

Encoder Operation

The KH3 Series transmitter internally utilizes the DS Series encoder. The encoder begins a three-word transmission cycle when the Transmission Enable line (TE) is pulled high. This cycle repeats itself for as long as the TE line is held high. Once TE falls low, the encoder completes its final cycle and then stops as shown in the Encoder / Decoder Timing diagram (Figure 16). When a transmission enable signal is applied, the encoder scans and transmits the status of the 10 bits of the address code and the 8 bits of the data serially in the order A0 to A9, D0 to D7.

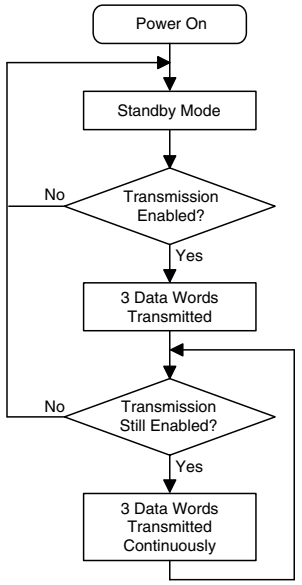

Figure 16: Encoder Flowchart

The state of address / data pins can be interpreted as ONE, ZERO or OPEN bits, following the logic of the D_CFG, A_CFG0 and A_CFG1 inputs. See the Input Type Selection section for more details. The open bit on the data input is interpreted as logic low by the decoders since the decoder output only has two states. The address pins are usually set to transmit particular security codes by DIP switches or PCB wiring, while the data is selected using push buttons or electronic switches.

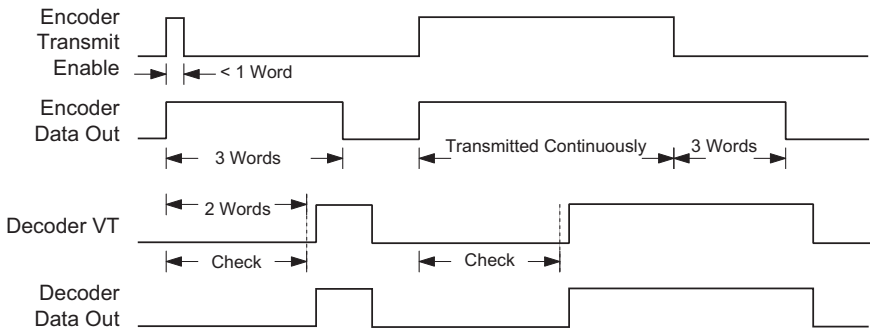

Figure 17: Encoder / Decoder Timing Diagram

Setting the Transmitter Address

The module has ten address lines. This allows the formation of up to 1,022 (2^{10} – 2) unique transmitter-receiver relationships.

Note: All address lines high or all low is not allowed, so at least one line must be different from the others.

Because the address inputs have internal pull-up resistors these pins can be left floating or tied to GND. These pins may be hardwired or configured via a microprocessor, DIP switch or jumpers. The receiver's address line states must match the transmitter's exactly for a transmission to be recognized. If the transmitted address does not match the receiver's local address, then the receiver will take no action.

Data Inputs

When the Transmit Enable (TE) line goes high, the states of the eight data input lines are recorded and encoded for transmission. Because the data inputs have internal pull-down resistors, these pins can be left floating or tied to V_{CC}. The states of the data lines can be set by switches, jumpers, microcontrollers or hardwired on the PCB.

The encoder sends the states of the address and data lines three times. If the TE line is still high, it begins the cycle again. This means that the states of the data lines are refreshed with each cycle, so the data lines can be changed without having to pull TE low. There can be up to a 150ms lag in response as the transmitter finishes one cycle then refreshes and starts over.

Enabling Transmission

The module's Transmit Enable (TE) line controls transmission status. When taken high, the module initiates transmission, which continues until the line is pulled low or power to the module is removed. In some cases this line will be wired permanently to V_{CC} and transmission controlled by switching V_{CC} to the module. This is particularly useful in applications where the module powers up and sends a transmission only when a button is pressed on the remote.

Input Type Selection

The KH3 Series transmitter incorporates the DS Series remote control encoder, which is designed to be operable with previous generation products based on Holtek® encoders and decoders. The Holtek® encoders and decoders have tri-state input lines but the DS has bi-state

lines. Tri-state inputs are connected to ground for zero bits, V_{CC} for one bits, or left unconnected for open bits. Since the DS cannot match this operation the D_CFG, A_CFG0 and A_CFG1 lines are provided to select the desired interpretation. The settings must match on both ends.

Pulling the D_CFG line high configures the data inputs as one and zero. A high on a data line is interpreted as a one bit and a low on the line is interpreted as a zero bit. Pulling D_CFG low configures the data inputs as one and open. A high on a data line is interpreted as a one bit and a low on the line is interpreted as an open bit. The decoder outputs open data bits as logic low. This is shown in Figure 18.

D_CFG Configuration		
Configuration	**Bit Interpretation**	
D_CFG	**High**	**Low**
0	One	Open
1	One	Zero

Figure 18: D_CFG Configuration

A_CFG0 and A_CFG1 are used to select the bit type for the address lines. These are shown in Figure 19.

A_CFGO and A_CFG1 Configuration			
Configuration		**Bit Interpretation**	
A_CFG1	**A_CFG0**	**High**	**Low**
0	0	One	Zero
0	1	One	Open
1	0	Open	Zero
1	1	One	Zero

Figure 19: A_CFG0 and A_CFG1 Configuration

D_CFG is pulled low internally so that a high on a data line is transmitted as a one bit and a low on the line is transmitted as an open bit. A_CFG0 is pulled low and A_CFG1 is pulled high internally so that a high on an address line is interpreted as an open bit and a low as a zero bit.

This configuration matches the Linx OEM products and the most common implementation of the legacy KH2 Series. This enables customers using the KH2 Series to populate the KH3 Series without any PCB modifications since pins 25, 26 and 27 can be left unconnected.

Using LADJ

The LADJ line allows the transmitter's output power to be easily adjusted for range control, lower power consumption, or to meet legal requirements. This is done by placing a resistor between GND and LADJ. When LADJ is connected directly to GND, the output power is at its maximum. Placing a resistor lowers the output power by up to 7dB, as shown in Figure 12.

This is very useful during FCC testing to compensate for antenna gain or other product-specific issues that may cause the output power to exceed legal limits. A variable resistor can be used so that the test lab can precisely adjust the output power to the maximum level allowed by law. The resistor's value can be noted and a fixed resistor substituted for final testing. Even in designs where attenuation is not anticipated, it is a good idea to place a resistor pad connected to LADJ and GND so that it can be used if needed.

Power Supply Requirements

The module does not have an internal voltage regulator; therefore it requires a clean, well-regulated power source. While it is preferable to power the unit from a battery, it can also be operated from a power supply as long as noise is less than 20mV. Power supply noise can affect the transmitter modulation; therefore, providing a clean power supply for the module should be a high priority during design.

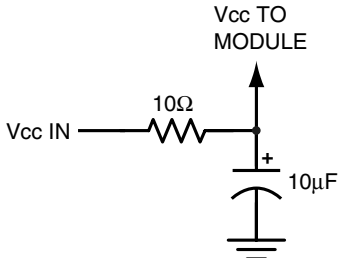

Figure 20: Power Supply Filter

A 10-ohm resistor in series with the supply followed by a 10µF tantalum capacitor from V_{CC} to ground will help in cases where the quality of supply power is poor. These values may need to be adjusted depending on the noise present on the supply line.

Typical Applications

Figure 21 shows an example of a basic remote control transmitter utilizing the KH3 Series transmitter.

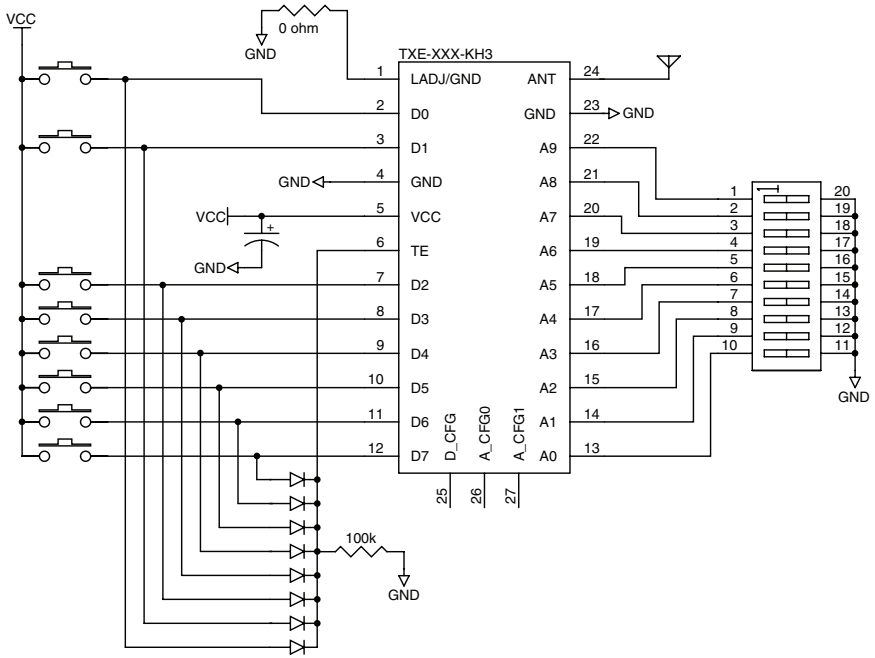

Figure 21: KH3 Series Transmitter Typical Application Circuit

The data lines are connected to buttons. When a button is pressed it takes the corresponding data line high and the TE line to begin the transmission process. Since the data pins are internally pulled down to GND, no pull-down resistors are needed.

Diodes are used to pull the TE line high when any data line goes high, while isolating the data lines from each other. This makes the transmitter send data when any button is pressed without affecting any of the other data lines.

A ten-position DIP switch is used to set the address to either ground or V_{CC}. Since the address lines are internally pulled up to V_{CC}, no pull-up resistors are needed.

A resistor is placed on the LADJ line going to GND. This allows the transmitter output power to be adjusted if needed.

Antenna Considerations

The choice of antennas is a critical and often overlooked design consideration. The range, performance and legality of an RF link are critically dependent upon the antenna. While adequate antenna performance can often be obtained by trial and error methods, antenna design and matching is a complex task. Professionally designed antennas such as those from Linx (Figure 22) help ensure maximum performance and FCC and other regulatory compliance.



Figure 22: Linx Antennas

Linx transmitter modules typically have an output power that is higher than the legal limits. This allows the designer to use an inefficient antenna such as a loop trace or helical to meet size, cost or cosmetic requirements and still achieve full legal output power for maximum range. If an efficient antenna is used, then some attenuation of the output power will likely be needed. This can easily be accomplished by using the LADJ line.

It is usually best to utilize a basic quarter-wave whip until your prototype product is operating satisfactorily. Other antennas can then be evaluated based on the cost, size and cosmetic requirements of the product. Additional details are in Application Note AN-00500.

Helpful Application Notes from Linx

It is not the intention of this manual to address in depth many of the issues that should be considered to ensure that the modules function correctly and deliver the maximum possible performance. We recommend reading the application notes listed in Figure 23 which address in depth key areas of RF design and application of Linx products. These applications notes are available online at www.linxtechnologies.com or by contacting Linx.

Helpful Application Note Titles

Note Number	Note Title
AN-00100	RF 101: Information for the RF Challenged
AN-00126	Considerations for Operation Within the 902–928MHz Band
AN-00130	Modulation Techniques for Low-Cost RF Data Links
AN-00140	The FCC Road: Part 15 from Concept to Approval
AN-00150	Use and Design of T-Attenuation Pads
AN-00300	Addressing Linx OEM Products
AN-00500	Antennas: Design, Application, Performance
AN-00501	Understanding Antenna Specifications and Operation

Figure 23: Helpful Application Note Titles

Interference Considerations

The RF spectrum is crowded and the potential for conflict with unwanted sources of RF is very real. While all RF products are at risk from interference, its effects can be minimized by better understanding its characteristics.

Interference may come from internal or external sources. The first step is to eliminate interference from noise sources on the board. This means paying careful attention to layout, grounding, filtering and bypassing in order to eliminate all radiated and conducted interference paths. For many products, this is straightforward; however, products containing components such as switching power supplies, motors, crystals and other potential sources of noise must be approached with care. Comparing your own design with a Linx evaluation board can help to determine if and at what level design-specific interference is present.

External interference can manifest itself in a variety of ways. Low-level interference produces noise and hashing on the output and reduces the link's overall range.

High-level interference is caused by nearby products sharing the same frequency or from near-band high-power devices. It can even come from your own products if more than one transmitter is active in the same area. It is important to remember that only one transmitter at a time can occupy a frequency, regardless of the coding of the transmitted signal. This type of interference is less common than those mentioned previously, but in severe cases it can prevent all useful function of the affected device.

Although technically not interference, multipath is also a factor to be understood. Multipath is a term used to refer to the signal cancellation effects that occur when RF waves arrive at the receiver in different phase relationships. This effect is a particularly significant factor in interior environments where objects provide many different signal reflection paths. Multipath cancellation results in lowered signal levels at the receiver and shorter useful distances for the link.

Pad Layout

The pad layout diagram in Figure 24 is designed to facilitate both hand and automated assembly.

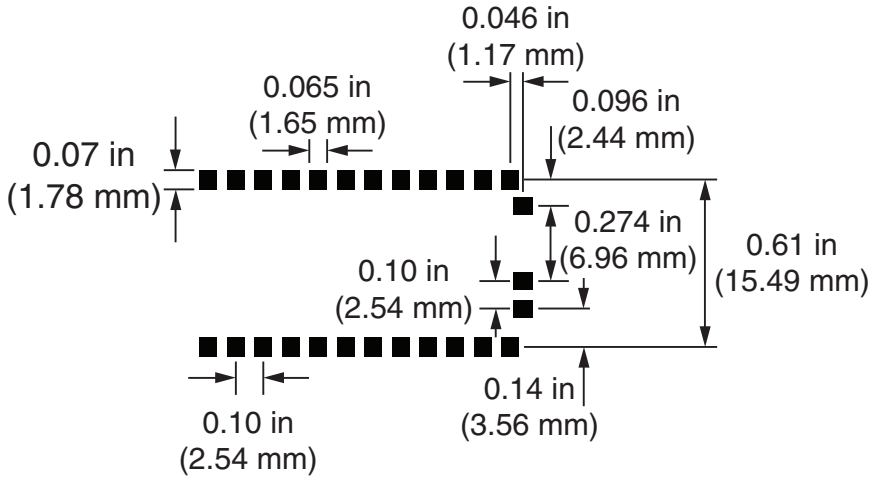

Figure 24: Recommended PCB Layout

Board Layout Guidelines

The module's design makes integration straightforward; however, it is still critical to exercise care in PCB layout. Failure to observe good layout techniques can result in a significant degradation of the module's performance. A primary layout goal is to maintain a characteristic 50-ohm impedance throughout the path from the antenna to the module. Grounding, filtering, decoupling, routing and PCB stack-up are also important considerations for any RF design. The following section provides some basic design guidelines.

During prototyping, the module should be soldered to a properly laid-out circuit board. The use of prototyping or "perf" boards results in poor performance and is strongly discouraged. Likewise, the use of sockets can have a negative impact on the performance of the module and is discouraged.

The module should, as much as reasonably possible, be isolated from other components on your PCB, especially high-frequency circuitry such as crystal oscillators, switching power supplies, and high-speed bus lines.

When possible, separate RF and digital circuits into different PCB regions.

Make sure internal wiring is routed away from the module and antenna and is secured to prevent displacement.

Do not route PCB traces directly under the module. There should not be any copper or traces under the module on the same layer as the module, just bare PCB. The underside of the module has traces and vias that could short or couple to traces on the product's circuit board.

The Pad Layout section shows a typical PCB footprint for the module. A ground plane (as large and uninterrupted as possible) should be placed on a lower layer of your PC board opposite the module. This plane is essential for creating a low impedance return for ground and consistent stripline performance.

Use care in routing the RF trace between the module and the antenna or connector. Keep the trace as short as possible. Do not pass it under the module or any other component. Do not route the antenna trace on multiple PCB layers as vias add inductance. Vias are acceptable for tying together ground layers and component grounds and should be used in multiples.

Each of the module's ground pins should have short traces tying immediately to the ground plane through a via.

Bypass caps should be low ESR ceramic types and located directly adjacent to the pin they are serving.

A 50-ohm coax should be used for connection to an external antenna. A 50-ohm transmission line, such as a microstrip, stripline or coplanar waveguide should be used for routing RF on the PCB. The Microstrip Details section provides additional information.

In some instances, a designer may wish to encapsulate or "pot" the product. There are a wide variety of potting compounds with varying dielectric properties. Since such compounds can considerably impact RF performance and the ability to rework or service the product, it is the responsibility of the designer to evaluate and qualify the impact and suitability of such materials.

Microstrip Details

A transmission line is a medium whereby RF energy is transferred from one place to another with minimal loss. This is a critical factor, especially in high-frequency products like Linx RF modules, because the trace leading to the module's antenna can effectively contribute to the length of the antenna, changing its resonant bandwidth. In order to minimize loss and detuning, some form of transmission line between the antenna and the module should be used unless the antenna can be placed very close (<1/8in) to the module. One common form of transmission line is a coax cable and another is the microstrip. This term refers to a PCB trace running over a ground plane that is designed to serve as a transmission line between the module and the antenna. The width is based on the desired characteristic impedance of the line, the thickness of the PCB and the dielectric constant of the board material. For standard 0.062in thick FR-4 board material, the trace width would be 111 mils. The correct trace width can be calculated for other widths and materials using the information in Figure 25 and examples are provided in Figure 26. Software for calculating microstrip lines is also available on the Linx website.

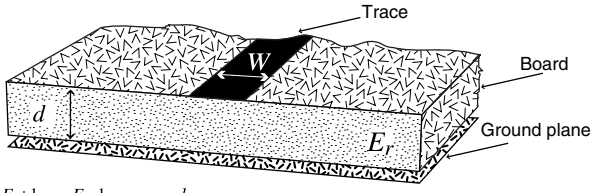

$$E_e = \frac{E_r+1}{2} + \frac{E_r-1}{2} \cdot \frac{1}{\sqrt{1+12d/W}}$$

$$Z_0 = \begin{cases} \frac{60}{\sqrt{E_e}} \cdot ln\left(\frac{8d}{W} + \frac{W}{4d}\right) & \text{For } \frac{W}{d} \le 1 \\ \frac{120\pi}{\sqrt{E_e} \cdot \left(\frac{W}{d} + 1.393 + 0.667 \cdot \ln\left(\frac{W}{d} + 1.444\right)\right)} & \text{For } \frac{W}{d} \ge 1 \end{cases}$$

E_r = Dielectric constant of PCB material

Figure 25: Microstrip Formulas

Example Microstrip Calculations

Dielectric Constant	Width / Height Ratio (W / d)	Effective Dielectric Constant	Characteristic Impedance (Ω)
4.80	1.8	3.59	50.0
4.00	2.0	3.07	51.0
2.55	3.0	2.12	48.8

Figure 26: Example Microstrip Calculations

Production Guidelines

The module is housed in a hybrid SMD package that supports hand and automated assembly techniques. Since the modules contain discrete components internally, the assembly procedures are critical to ensuring the reliable function of the modules. The following procedures should be reviewed with and practiced by all assembly personnel.

Hand Assembly

Pads located on the bottom of the module are the primary mounting surface (Figure 27). Since these pads are inaccessible during mounting, castellations that run up the side of the module have been provided to facilitate solder wicking to the module's underside. This allows for very quick hand soldering for prototyping and small volume production. If the recommended pad guidelines have been followed, the pads will protrude slightly past the edge of the module. Use a fine soldering tip to heat the board pad and the castellation, then introduce solder to the pad at the module's edge. The solder will wick underneath the module, providing reliable attachment. Tack one module corner first and then work around the device, taking care not to exceed the times in Figure 28.

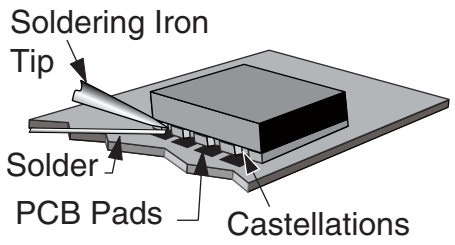

Figure 27: Soldering Technique

Warning: Pay attention to the absolute maximum solder times.

Absolute Maximum Solder Times
Hand Solder Temperature: +225ºC for 10 seconds
Reflow Oven: +225ºC max (see Figure 29)

Figure 28: Absolute Maximum Solder Times

Automated Assembly

For high-volume assembly, the modules are generally auto-placed. The modules have been designed to maintain compatibility with reflow processing techniques; however, due to their hybrid nature, certain aspects of the assembly process are far more critical than for other component types. Following are brief discussions of the three primary areas where caution must be observed.

Reflow Temperature Profile

The single most critical stage in the automated assembly process is the reflow stage. The reflow profile in Figure 29 should not be exceeded because excessive temperatures or transport times during reflow will irreparably damage the modules. Assembly personnel need to pay careful attention to the oven's profile to ensure that it meets the requirements necessary to successfully reflow all components while still remaining within the limits mandated by the modules. The figure below shows the recommended reflow oven profile for the modules.

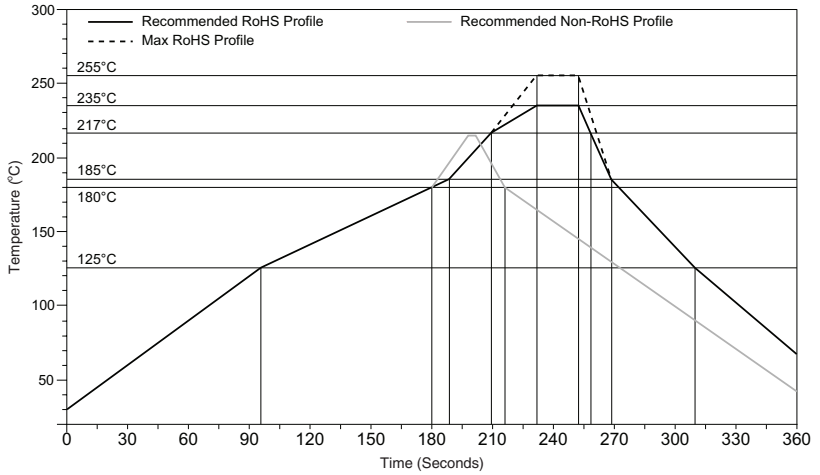

Figure 29: Maximum Reflow Temperature Profile

Shock During Reflow Transport

Since some internal module components may reflow along with the components placed on the board being assembled, it is imperative that the modules not be subjected to shock or vibration during the time solder is liquid. Should a shock be applied, some internal components could be lifted from their pads, causing the module to not function properly.

Washability

The modules are wash-resistant, but are not hermetically sealed. Linx recommends wash-free manufacturing; however, the modules can be subjected to a wash cycle provided that a drying time is allowed prior to applying electrical power to the modules. The drying time should be sufficient to allow any moisture that may have migrated into the module to evaporate, thus eliminating the potential for shorting damage during power-up or testing. If the wash contains contaminants, the performance may be adversely affected, even after drying.

General Antenna Rules

The following general rules should help in maximizing antenna performance.

1. Proximity to objects such as a user's hand, body or metal objects will cause an antenna to detune. For this reason, the antenna shaft and tip should be positioned as far away from such objects as possible.

2. Optimum performance is obtained from a ¼- or ½-wave straight whip mounted at a right angle to the ground plane (Figure 30). In many cases, this isn't desirable for practical or ergonomic reasons, thus, an alternative antenna style such as a helical, loop or patch may be utilized and the corresponding sacrifice in performance accepted.

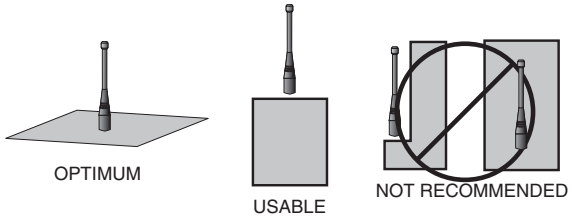

Figure 30: Ground Plane Orientation

3. If an internal antenna is to be used, keep it away from other metal components, particularly large items like transformers, batteries, PCB tracks and ground planes. In many cases, the space around the antenna is as important as the antenna itself. Objects in close proximity to the antenna can cause direct detuning, while those farther away will alter the antenna's symmetry.

4. In many antenna designs, particularly ¼-wave whips, the ground plane acts as a counterpoise, forming, in essence, a ½-wave dipole (Figure 31). For this reason, adequate ground plane area is essential. The ground plane can be a metal case or ground-fill areas on a circuit board. Ideally, it should have a surface area less than or equal to the overall length of the ¼-wave radiating element. This is often not practical due to size and configuration constraints. In these instances, a designer must make the best use of the area available to create as much ground plane as possible in proximity to the base of the antenna. In cases where the antenna is remotely located or the antenna is not in close proximity to a circuit board, ground plane or grounded metal case, a metal plate may be used to maximize the antenna's performance.

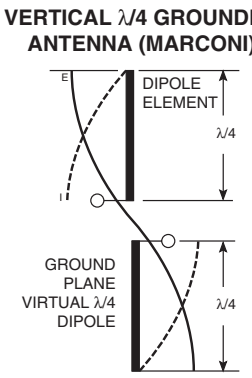

Figure 31: Dipole Antenna

5. Remove the antenna as far as possible from potential interference sources. Any frequency of sufficient amplitude to enter the receiver's front end will reduce system range and can even prevent reception entirely. Switching power supplies, oscillators or even relays can also be significant sources of potential interference. The single best weapon against such problems is attention to placement and layout. Filter the module's power supply with a high-frequency bypass capacitor. Place adequate ground plane under potential sources of noise to shunt noise to ground and prevent it from coupling to the RF stage. Shield noisy board areas whenever practical.

6. In some applications, it is advantageous to place the module and antenna away from the main equipment (Figure 32). This can avoid interference problems and allows the antenna to be oriented for optimum performance. Always use 50Ω coax, like RG-174, for the remote feed.

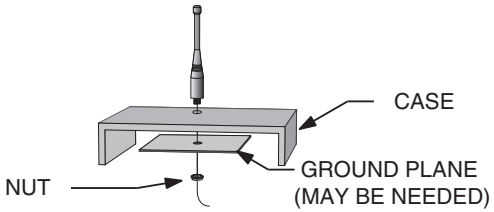

Figure 32: Remote Ground Plane

Common Antenna Styles

There are hundreds of antenna styles and variations that can be employed with Linx RF modules. Following is a brief discussion of the styles most commonly utilized. Additional antenna information can be found in Linx Application Notes AN-00100, AN-00140, AN-00500 and AN-00501. Linx antennas and connectors offer outstanding performance at a low price.

Whip Style

A whip style antenna (Figure 33) provides outstanding overall performance and stability. A low-cost whip can be easily fabricated from a wire or rod, but most designers opt for the consistent performance and cosmetic appeal of a professionally-made model. To meet this need, Linx offers a wide variety of straight and reduced height whip style antennas in permanent and connectorized mounting styles.



Figure 33: Whip Style Antennas

The wavelength of the operational frequency determines an antenna's overall length. Since a full wavelength is often quite long, a partial ½- or ¼-wave antenna is normally employed. Its size and natural radiation resistance make it well matched to Linx modules. The proper length for a straight ¼-wave can be easily determined using the formula in Figure 34. It is also possible to reduce the overall height of the antenna by using a helical winding. This reduces the antenna's bandwidth but is a great way to minimize the antenna's physical size for compact applications. This also means that the physical appearance is not always an indicator of the antenna's frequency.

$$L = \frac{234}{F_{MHz}}$$

Figure 34:
L = length in feet of quarter-wave length
F = operating frequency in megahertz

Specialty Styles

Linx offers a wide variety of specialized antenna styles (Figure 35). Many of these styles utilize helical elements to reduce the overall antenna size while maintaining reasonable performance. A helical antenna's bandwidth is often quite narrow and the antenna can detune in proximity to other objects, so care must be exercised in layout and placement.



Figure 35: Specialty Style Antennas

Loop Style

A loop or trace style antenna is normally printed directly on a product's PCB (Figure 36). This makes it the most cost-effective of antenna styles. The element can be made self-resonant or externally resonated with discrete components, but its actual layout is usually product specific. Despite the cost advantages, loop style antennas are generally inefficient and useful only for short range applications. They are also very sensitive to changes in layout and PCB dielectric, which can cause consistency issues during production. In addition, printed styles are difficult to engineer, requiring the use of expensive equipment including a network analyzer. An improperly designed loop will have a high VSWR at the desired frequency which can cause instability in the RF stage.



Figure 36: Loop or Trace Antenna

Linx offers low-cost planar (Figure 37) and chip antennas that mount directly to a product's PCB. These tiny antennas do not require testing and provide excellent performance despite their small size. They offer a preferable alternative to the often problematic "printed" antenna.



Figure 37: SP Series "Splatch" and uSP "MicroSplatch" Antennas

Regulatory Considerations

Note: Linx RF modules are designed as component devices that require external components to function. The purchaser understands that additional approvals may be required prior to the sale or operation of the device, and agrees to utilize the component in keeping with all laws governing its use in the country of operation.

When working with RF, a clear distinction must be made between what is technically possible and what is legally acceptable in the country where operation is intended. Many manufacturers have avoided incorporating RF into their products as a result of uncertainty and even fear of the approval and certification process. Here at Linx, our desire is not only to expedite the design process, but also to assist you in achieving a clear idea of what is involved in obtaining the necessary approvals to legally market a completed product.

For information about regulatory approval, read AN-00142 on the Linx website or call Linx. Linx designs products with worldwide regulatory approval in mind.

In the United States, the approval process is actually quite straightforward. The regulations governing RF devices and the enforcement of them are the responsibility of the Federal Communications Commission (FCC). The regulations are contained in Title 47 of the United States Code of Federal Regulations (CFR). Title 47 is made up of numerous volumes; however, all regulations applicable to this module are contained in Volume 0-19. It is strongly recommended that a copy be obtained from the FCC's website, the Government Printing Office in Washington or from your local government bookstore. Excerpts of applicable sections are included with Linx evaluation kits or may be obtained from the Linx Technologies website, www.linxtechnologies.com. In brief, these rules require that any device that intentionally radiates RF energy be approved, that is, tested for compliance and issued a unique identification number. This is a relatively painless process. Final compliance testing is performed by one of the many independent testing laboratories across the country. Many labs can also provide other certifications that the product may require at the same time, such as UL, CLASS A / B, etc. Once the completed product has passed, an ID number is issued that is to be clearly placed on each product manufactured.

Questions regarding interpretations of the Part 2 and Part 15 rules or the measurement procedures used to test intentional radiators such as Linx RF modules for compliance with the technical standards of Part 15 should be addressed to:

Federal Communications Commission
Equipment Authorization Division
Customer Service Branch, MS 1300F2
7435 Oakland Mills Road
Columbia, MD, US 21046
Phone: + 1 301 725 585 | Fax: + 1 301 344 2050
Email: labinfo@fcc.gov

ETSI Secretaria
650, Route des Lucioles
06921 Sophia-Antipolis Cedex
FRANCE
Phone: +33 (0)4 92 94 42 00
Fax: +33 (0)4 93 65 47 16

International approvals are slightly more complex, although Linx modules are designed to allow all international standards to be met. If the end product is to be exported to other countries, contact Linx to determine the specific suitability of the module to the application.

All Linx modules are designed with the approval process in mind and thus much of the frustration that is typically experienced with a discrete design is eliminated. Approval is still dependent on many factors, such as the choice of antennas, correct use of the frequency selected and physical packaging. While some extra cost and design effort are required to address these issues, the additional usefulness and profitability added to a product by RF makes the effort more than worthwhile.

Notes

Linx Technologies
159 Ort Lane
Merlin, OR, US 97532

Phone: +1 541 471 6256
Fax: +1 541 471 6251

www.linxtechnologies.com

Disclaimer

Linx Technologies is continually striving to improve the quality and function of its products. For this reason, we reserve the right to make changes to our products without notice. The information contained in this Data Guide is believed to be accurate as of the time of publication. Specifications are based on representative lot samples. Values may vary from lot-to-lot and are not guaranteed. "Typical" parameters can and do vary over lots and application. Linx Technologies makes no guarantee, warranty, or representation regarding the suitability of any product for use in any specific application. It is the customer's responsibility to verify the suitability of the part for the intended application. NO LINX PRODUCT IS INTENDED FOR USE IN ANY APPLICATION WHERE THE SAFETY OF LIFE OR PROPERTY IS AT RISK.

Linx Technologies DISCLAIMS ALL WARRANTIES OF MERCHANTABILITY AND FITNESS FOR A PARTICULAR PURPOSE. IN NO EVENT SHALL LINX TECHNOLOGIES BE LIABLE FOR ANY OF CUSTOMER'S INCIDENTAL OR CONSEQUENTIAL DAMAGES ARISING IN ANY WAY FROM ANY DEFECTIVE OR NON-CONFORMING PRODUCTS OR FOR ANY OTHER BREACH OF CONTRACT BY LINX TECHNOLOGIES. The limitations on Linx Technologies' liability are applicable to any and all claims or theories of recovery asserted by Customer, including, without limitation, breach of contract, breach of warranty, strict liability, or negligence. Customer assumes all liability (including, without limitation, liability for injury to person or property, economic loss, or business interruption) for all claims, including claims from third parties, arising from the use of the Products. The Customer will indemnify, defend, protect, and hold harmless Linx Technologies and its officers, employees, subsidiaries, affiliates, distributors, and representatives from and against all claims, damages, actions, suits, proceedings, demands, assessments, adjustments, costs, and expenses incurred by Linx Technologies as a result of or arising from any Products sold by Linx Technologies to Customer. Under no conditions will Linx Technologies be responsible for losses arising from the use or failure of the device in any application, other than the repair, replacement, or refund limited to the original product purchase price. Devices described in this publication may contain proprietary, patented, or copyrighted techniques, components, or materials. Under no circumstances shall any user be conveyed any license or right to the use or ownership of such items.

©2015 Linx Technologies. All rights reserved.

The stylized Linx logo, Wireless Made Simple, WiSE, CipherLinx and the stylized CL logo are trademarks of Linx Technologies.