RICOH

Rx5RW SERIES

NO.EA-048-0602

OUTLINE

The Rx5RW Series are CMOS-based voltage regulator ICs with high accuracy output voltage and ultra-low supply current developed. Each of these ICs consists of a driver transistor, a voltage reference unit, an error amplifier, resistors for setting output volt-age and a current limit circuit.

The output voltage of these ICs is fixed with high accuracy.

Even if V_{OUT} is shorted to GND, the included current limit circuit protects the ICs from the destruction. Furthermore, Rx5RWxxA/B have a chip enable function, so that the supply current on standby can be minimized.

Since the packages for these ICs are SC-82AB (Super Mini-mold) package and SON1612-6, high density mounting of the ICs on boards is possible.

FEATURES

- Ultra-Low Supply Current..... Typ. 1.5μA
  (except pull-up/pull-down current for $\overline{CE}$ /CE pin)
- Standby Current ..... Typ. 0.1μA
- Dropout Voltage ..... Typ. 40mV (I_{OUT}=1mA, Rx5RW30A/B)
- Low Temperature-Drift Coefficient of Output Voltage... Typ. ±100ppm/°C
- Excellent Line Regulation ..... Typ. 0.05%/V
- High Accuracy Output Voltage ..... ±2.0%
- Ultra-Small Packages ..... SC-82AB (Super Mini-mold), SON1612-6
- Built-in Current Limit Circuits

APPLICATIONS

- Power source for battery-powered equipment.
- Power source for cameras, VCRs, camcorders, hand-held audio instruments and hand-held communication equipment.
- Precision voltage references.

BLOCK DIAGRAMS

Rx5RWxxA

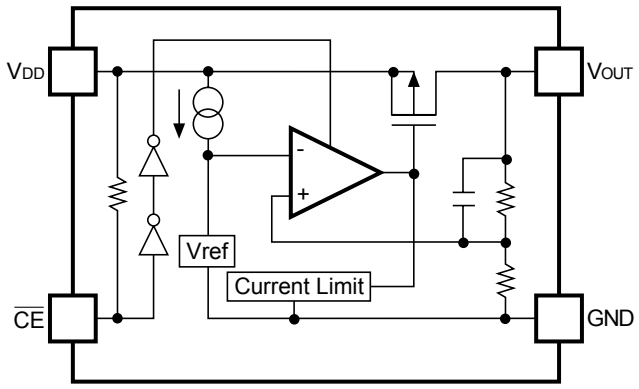

Rx5RWxxB

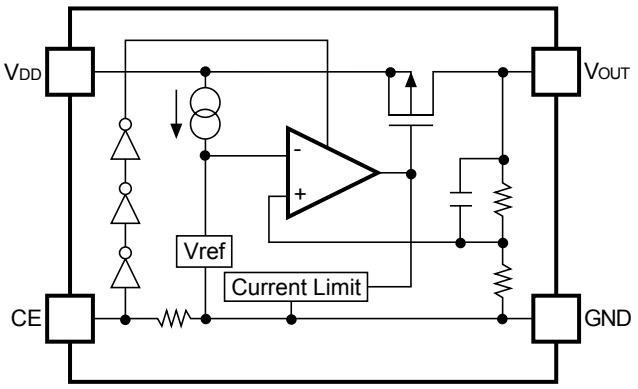

Rx5RWxxC

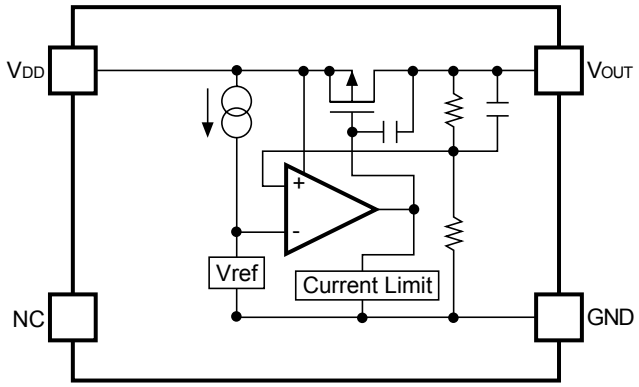

SELECTION GUIDE

The output voltage, the active type, and the packing type for the ICs can be selected at the user's request. The selection can be made with designating the part number as shown below:

Rx5RWxxxx-xx ←Part Number
↑ ↑ ↑↑ ↑
a b c d e

Code	Contents
a	Designation of Package Type Q: SC-82AB D:SON1612-6
b	Setting Output Voltage (V_{OUT}): Stepwise setting with a step of 0.1V in the range of 1.5V to 6.0V is possible.
c	Designation of Chip enable Active Type: A: “L” active type B: “H” active type C: no chip enable type
d	Designation of Packing Type: A: Taping B: Antistatic bag (for Sample only)
e	Designation of Taping Type: TR (refer to Taping Specifications)

PIN CONFIGURATION

● **SC-82AB**

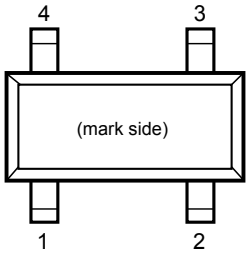

● **SON1612-6**

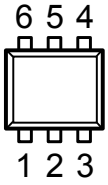

PIN DESCRIPTION

● **SC-82AB**

Pin No	Symbol	Pin Description
1	GND	Ground Pin
2	V_{DD}	Input Pin
3	V_{OUT}	Output Pin
4	$\overline{CE}$ or CE or NC	Chip Enable Pin or No Connection

SON1612-6

Pin No	Symbol	Pin Description
1	$\overline{CE}$ or CE or NC	Chip Enable Pin or No Connection
2	V_{DD}	Input Pin
3	V_{OUT}	Output Pin
4	NC	No Connection
5	V_{DD}	Input Pin
6	GND	Ground Pin

ABSOLUTE MAXIMUM RATINGS

Symbol	Item	Rating	Unit
V_{IN}	Input Voltage	9.0	V
V_{CE}	Input Voltage for $\overline{CE}$ /CE Pin	−0.3 to V_{IN} +0.3	V
V_{OUT}	Output Voltage	−0.3 to V_{IN} +0.3	V
I_{OUT}	Output Current	150	mA
P_D	Power Dissipation (SC-82AB) *1	380	mW
	Power Dissipation (SON1612-6) *1	500	
Topt	Operating Temperature	−40 to +85	°C
Tstg	Storage Temperature	−55 to +125	°C

∗1) For Power Dissipation, please refer to PACKAGE INFORMATION to be described.

ABSOLUTE MAXIMUM RATINGS

Absolute Maximum ratings are threshold limit values that must not be exceeded even for an instant under any conditions. Moreover, such values for any two items must not be reached simultaneously. Operation above these absolute maximum ratings may cause degradation or permanent damage to the device. These are stress ratings only and do not necessarily imply functional operation below these limits.

ELECTRICAL CHARACTERISTICS

- **Rx5RW30A**

Topt=25°C

Symbol	Item	Conditions	Min.	Typ.	Max.	Unit
V_{OUT}	Output Voltage	V_{IN}=5.0V 10μA ≦ I_{OUT} ≦ 10mA	2.940	3.000	3.060	V
I_{OUT}	Output Current	V_{IN}=5.0V	50			mA
$\Delta V_{OUT}/\Delta I_{OUT}$	Load Regulation	V_{IN}=5.0V, 1mA ≦ I_{OUT} ≦ 50mA		40	60	mV
V_{DIF}	Dropout Voltage	I_{OUT}=1mA		40	60	mV
I_{SS}	Supply Current	V_{IN}=5.0V		1.5	3.0	μA
Istandby	Standby Current	V_{IN}=5.0V, V_{CE}=5.0V		0.1	1.0	μA
$\Delta V_{OUT}/\Delta V_{IN}$	Line Regulation	I_{OUT}=1mA V_{OUT}+0.5V ≦ V_{IN} ≦ 8V	0.00	0.05	0.20	%/V
V_{IN}	Input Voltage				8.0	V
$\Delta V_{OUT}/\Delta$Topt	Output Voltage Temperature Coefficient	I_{OUT}=10mA −40°C ≦ Topt ≦ 85°C		±100		ppm/°C
I_{LIM}	Short Current Limit	V_{OUT}=0V		40		mA
R_{PU}	Pull up resistance for CE pin		1.5	4.0	12.0	MΩ
V_{CEH}	$\overline{CE}$ Input Voltage “H”		1.5			V
V_{CEL}	$\overline{CE}$ Input Voltage “L”		0.25			V

- **Rx5RW30B**

Topt=25°C

Symbol	Item	Conditions	Min.	Typ.	Max.	Unit
V_{OUT}	Output Voltage	V_{IN}=5.0V 10μA ≦ I_{OUT} ≦ 10mA	2.940	3.000	3.060	V
I_{OUT}	Output Current	V_{IN}=5.0V	50			mA
$\Delta V_{OUT}/\Delta I_{OUT}$	Load Regulation	V_{IN}=5.0V 1mA ≦ I_{OUT} ≦ 50mA		40	60	mV
V_{DIF}	Dropout Voltage	I_{OUT}=1mA		40	60	mV
I_{SS}	Supply Current	V_{IN}=5.0V		1.5	3.0	μA
Istandby	Standby Current	V_{IN}=5.0V, V_{CE}=GND		0.1	1.0	μA
$\Delta V_{OUT}/\Delta V_{IN}$	Line Regulation	I_{OUT}=1mA V_{OUT}+0.5V ≦ V_{IN} ≦ 8V	0.00	0.05	0.20	%/V
V_{IN}	Input Voltage				8.0	V
$\Delta V_{OUT}/\Delta Topt$	Output Voltage Temperature Coefficient	I_{OUT}=1mA −40°C ≦ Topt ≦ 85°C		±100		ppm/°C
I_{LIM}	Short Current Limit	V_{OUT}=0V		40		mA
R_{PD}	Pull down resistance for CE pin		1.5	4.0	12.0	MΩ
V_{CEH}	CE Input Voltage “H”		1.5			V
V_{CEL}	CE Input Voltage “L”		0.25			V

- **Rx5RW30C**

Topt=25°C

Symbol	Item	Conditions	Min.	Tyo.	Max.	Unit
V_{OUT}	Output Voltage	V_{IN}=5.0V 10μA ≦ I_{OUT} ≦ 10mA	2.940	3.000	3.060	V
I_{OUT}	Output Current	V_{IN}=5.0V	50			mA
$\Delta V_{OUT}/\Delta I_{OUT}$	Load Regulation	V_{IN}=5.0V 1mA ≦ I_{OUT} ≦ 50mA		40	60	mV
V_{DIF}	Dropout Voltage	I_{OUT}=1mA		40	60	mV
I_{SS}	Supply Current	V_{IN}=5.0V		1.5	3.0	μA
$\Delta V_{OUT}/\Delta V_{IN}$	Line Regulation	I_{OUT}=1mA 3.5V ≦ V_{IN} ≦ 8.0V	0.00	0.05	0.20	%/V
V_{IN}	Input Voltage				8.0	V
$\Delta V_{OUT}/\Delta Topt$	Output Voltage Temperature Coefficient	I_{OUT}=10mA −40°C ≦ Topt ≦ 85°C		±100		ppm/°C
I_{LIM}	Short Current Limit			40		mA

ELECTRICAL CHARACTERISTICS BY OUTPUT VOLTAGE

Topt=25°C

Part Number	Output Voltage				Output Current			Load Regulation			Dropout Voltage		
	V_{OUT} (V)				I_{OUT} (mA)			$\Delta V_{OUT}/\Delta I_{OUT}$ (mV)			V_{DIF} (mV)		
	Conditions	Min.	Typ.	Max.	Conditions	Min.	Typ.	Conditions	Typ.	Max.	Conditions	Typ.	Max.
Rx5RW15	V_{IN}-V_{OUT} =2.0V 10μA ≦ I_{OUT} ≦ 10mA	1.470	1.500	1.530	V_{IN}-V_{OUT} =2.0V	35		V_{IN}-V_{OUT} =2.0V 1mA ≦ I_{OUT} ≦ 35mA	30	45	I_{OUT}= 1mA	120	200
Rx5RW16		1.568	1.600	1.632								90	135
Rx5RW17		1.666	1.700	1.734									
Rx5RW18		1.764	1.800	1.836									
Rx5RW19		1.862	1.900	1.938									
Rx5RW20		1.960	2.000	2.040								60	90
Rx5RW21		2.058	2.100	2.142									
Rx5RW22		2.156	2.200	2.244									
Rx5RW23		2.254	2.300	2.346									
Rx5RW24		2.352	2.400	2.448								50	75
Rx5RW25		2.450	2.500	2.550									
Rx5RW26		2.548	2.600	2.652									
Rx5RW27		2.646	2.700	2.754									
Rx5RW28		2.744	2.800	2.856								40	60
Rx5RW29		2.842	2.900	2.958									
Rx5RW30		2.940	3.000	3.060		50		V_{IN}-V_{OUT} =2.0V 1mA ≦ I_{OUT} ≦ 50mA	40	60			
Rx5RW31		3.038	3.100	3.162									
Rx5RW32		3.136	3.200	3.264								35	55
Rx5RW33		3.234	3.300	3.366									
Rx5RW34		3.332	3.400	3.468									
Rx5RW35		3.430	3.500	3.570									
Rx5RW36		3.528	3.600	3.672								30	45
Rx5RW37		3.626	3.700	3.774									
Rx5RW38		3.724	3.800	3.876									
Rx5RW39		3.822	3.900	3.978									
Rx5RW40		3.920	4.000	4.080		65		V_{IN}-V_{OUT} =2.0V 1mA ≦ I_{OUT} ≦ 65mA	50	70		25	40
Rx5RW41		4.018	4.100	4.182									
Rx5RW42		4.116	4.200	4.284									
Rx5RW43		4.214	4.300	4.386									
Rx5RW44		4.312	4.400	4.488									
Rx5RW45		4.410	4.500	4.590									
Rx5RW46		4.508	4.600	4.692									
Rx5RW47		4.606	4.700	4.794									
Rx5RW48		4.704	4.800	4.896									
Rx5RW49		4.802	4.900	4.998									
Rx5RW50		4.900	5.000	5.100		80		V_{IN}-V_{OUT} =2.0V 1mA ≦ I_{OUT} ≦ 80mA	60	90			
Rx5RW51		4.998	5.100	5.202									
Rx5RW52		5.096	5.200	5.304									
Rx5RW53		5.194	5.300	5.406									
Rx5RW54		5.292	5.400	5.508									
Rx5RW55		5.390	5.500	5.610									
Rx5RW56		5.488	5.600	5.712									
Rx5RW57		5.586	5.700	5.814									
Rx5RW58		5.684	5.800	5.916									
Rx5RW59		5.782	5.900	6.018									
Rx5RW60		5.880	6.000	6.120									

ELECTRICAL CHARACTERISTICS BY OUTPUT VOLTAGE

(common characteristics)

Topt=25°C

Symbol	Item	Conditions	Min.	Typ.	Max.	Unit
I_{SS}	Supply Current	V_{IN}=setV_{OUT}+2.0		1.5	3.0	μA
Istandby	Standby Current	V_{IN}=setV_{OUT}+2.0V V_{CE}=V_{IN} (Rx5RWxxA), V_{CE}=GND (Rx5RWxxB)		0.1	1.0	μA
$\Delta V_{OUT}/\Delta V_{IN}$	Line Regulation	I_{OUT}=1mA setV_{OUT}+0.5V ≦ V_{IN} ≦ 8V	0.00	0.05	0.20	%/V
V_{IN}	Input Voltage				8.0	V
$\Delta V_{OUT}/\Delta$Topt	Output Voltage Temperature Coefficient	I_{OUT}=10mA −40°C ≦ Topt ≦ 85°C		±100		ppm/°C
I_{LIM}	Short Current Limit	V_{OUT}=0V		40		mA
R_{PU}/R_{PD}	$\overline{CE}$ Pull-up / CE Pull-down Resistance	applied to A/B version	1.5	4.0	12.0	MΩ
V_{CEH}	$\overline{CE}$ /CE Input Voltage “H”	applied to A/B version	1.5			V
V_{CEL}	$\overline{CE}$ /CE Input Voltage “L”	applied to A/B version			0.25	V

OPERATION

Rx5RWxxB

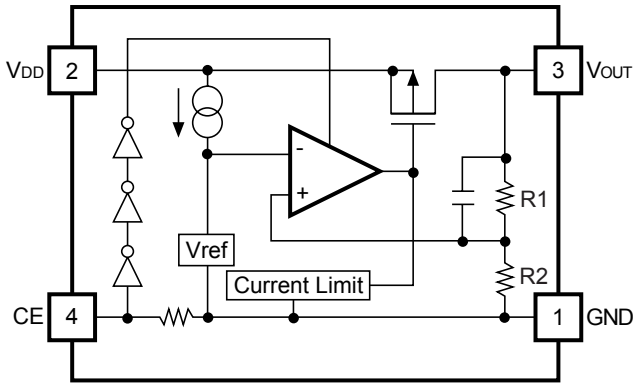

In these ICs, output voltage V_{OUT} is detected by Feedback Registers R1, R2, and the detected output voltage is compare with a reference voltage by the error amplifier, so that a constant voltage is output.

A current limit circuit working for short protect, and a chip enable circuit are included.

TEST CIRCUITS

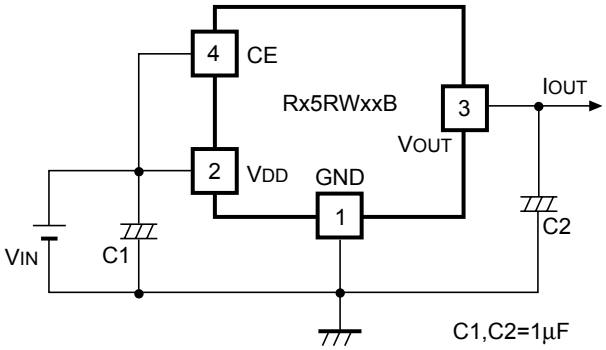

Standard Test Circuit

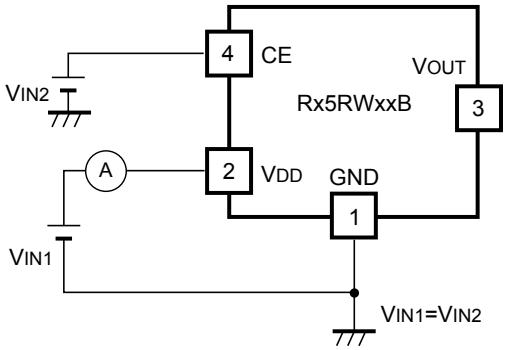

Test Circuit for Supply Current

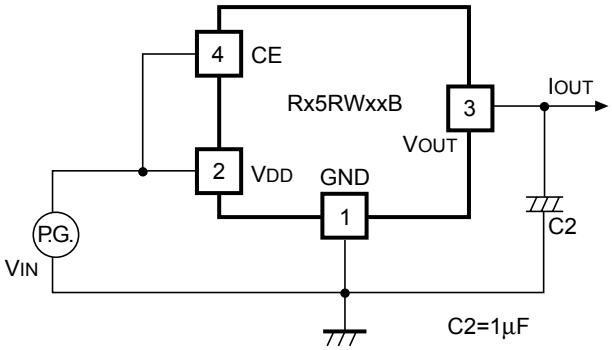

Test Circuit for Ripple Rejection and Line Transient Response

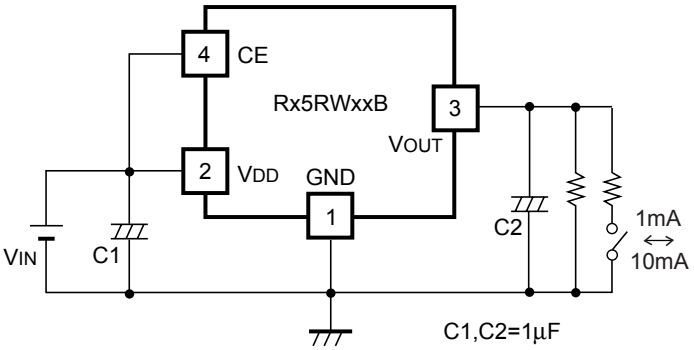

Test Circuit for Load Transient Response

TYPICAL APPLICATION

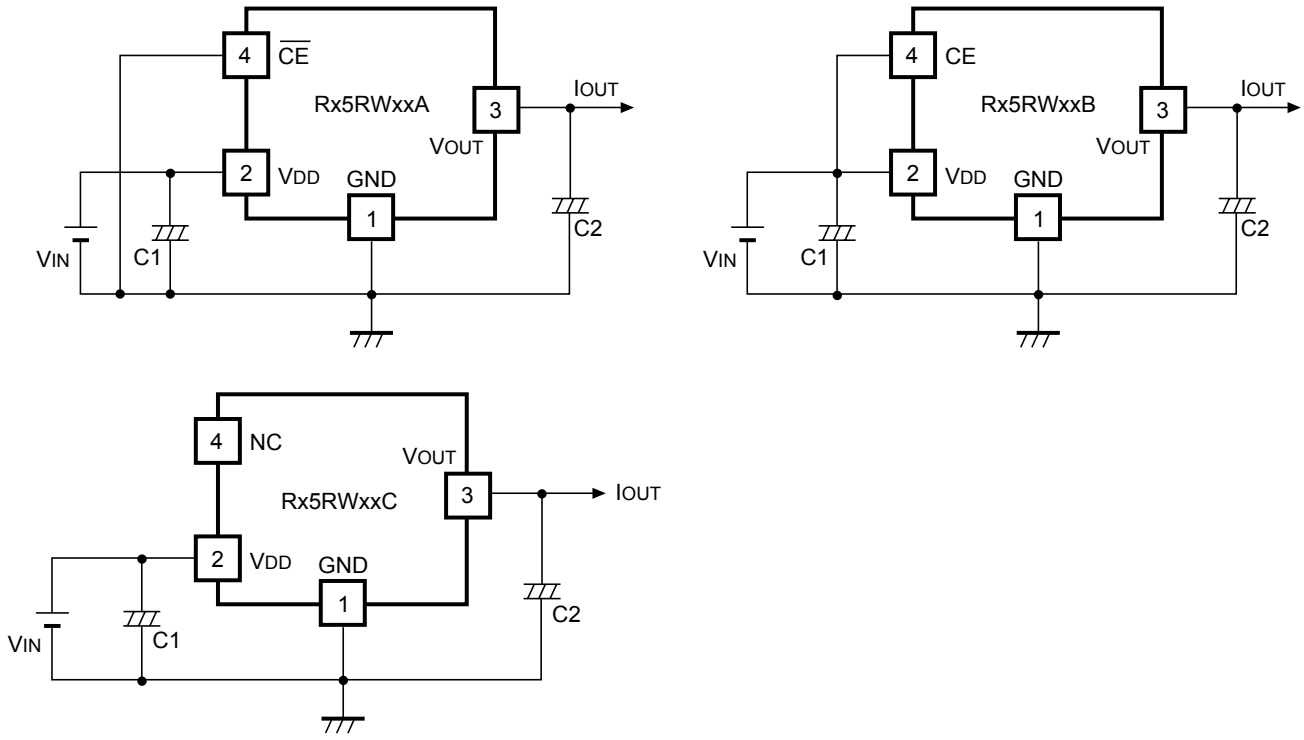

In Rx5RW Series, a constant voltage can be obtained without using capacitors, C1 and C2. However, when the wire connected V_{IN} is long, use capacitor C1. Output noise can be reduced with using capacitor 2.

Insert capacitors C1 and C2 with the capacitance of 0.1μF to 2μF between input/output pins and GND pin with minimum wiring.

TYPICAL CHARACTERISTICS

1) Output Voltage vs. Output Current

Rx5RW30B

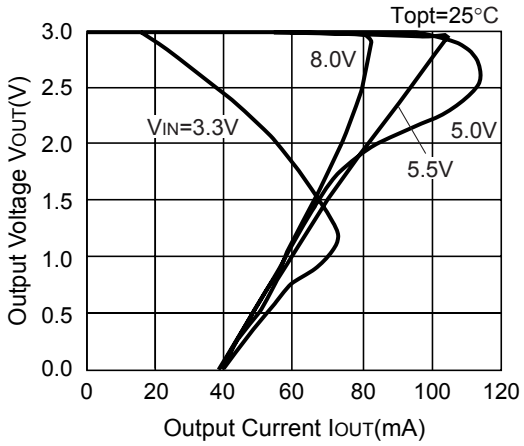

Rx5RW30B

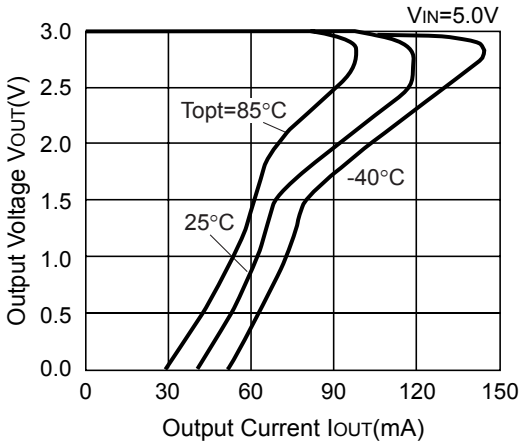

Rx5RW40B

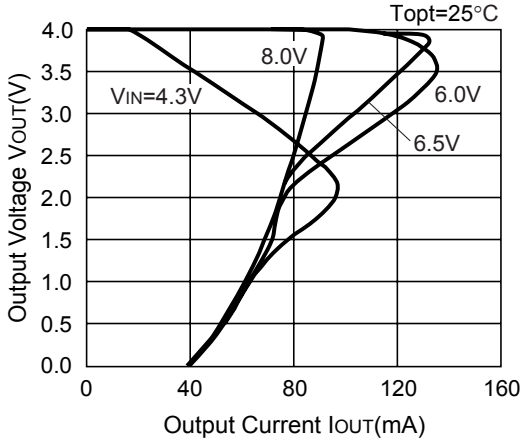

Rx5RW40B

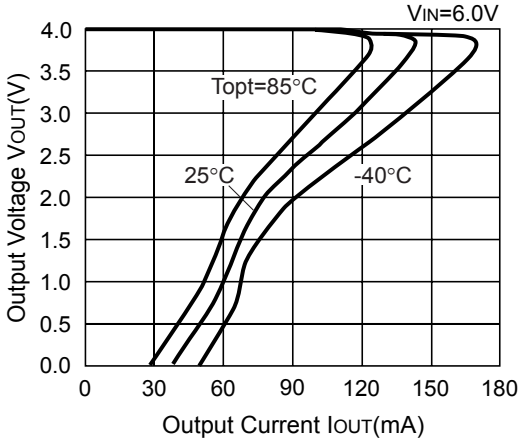

Rx5RW50B

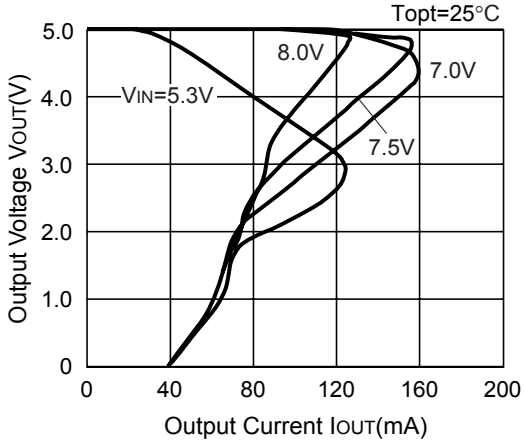

Rx5RW50B

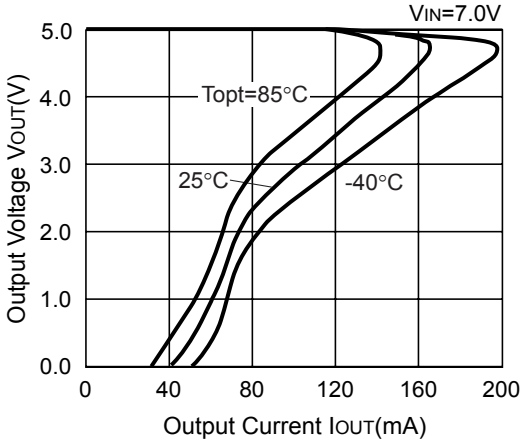

2) Output Voltage vs. Input Voltage

Rx5RW30B

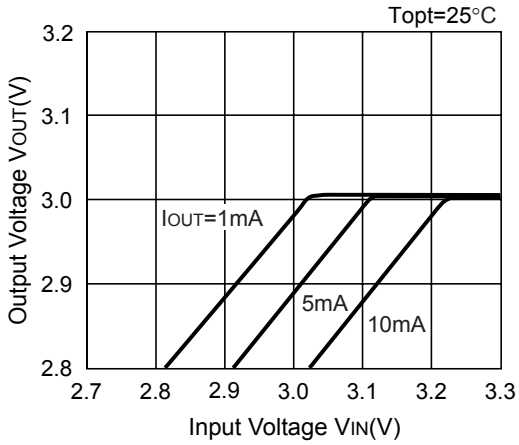

Rx5RW30B

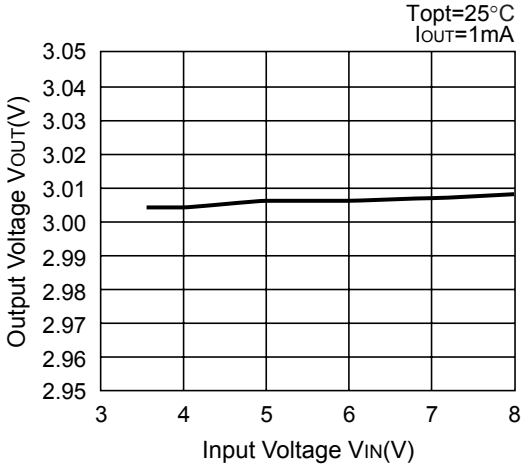

Rx5RW40B

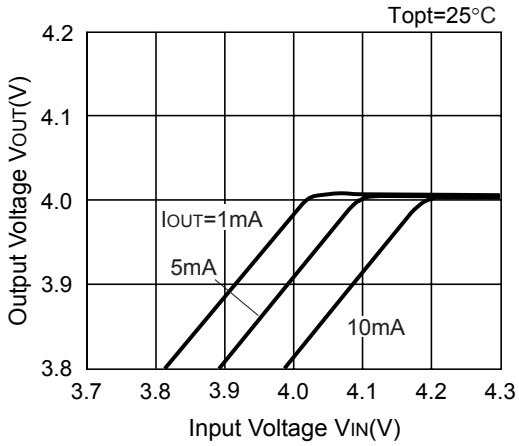

Rx5RW40B

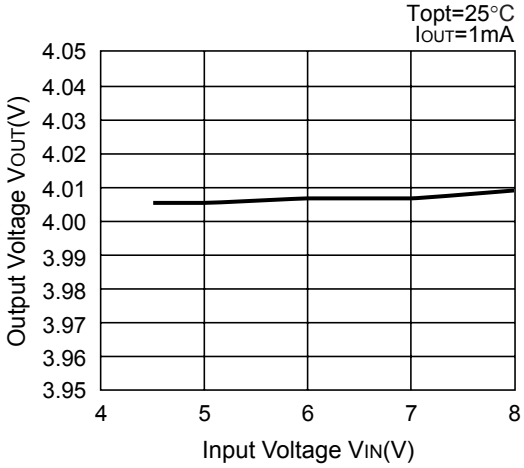

Rx5RW50B

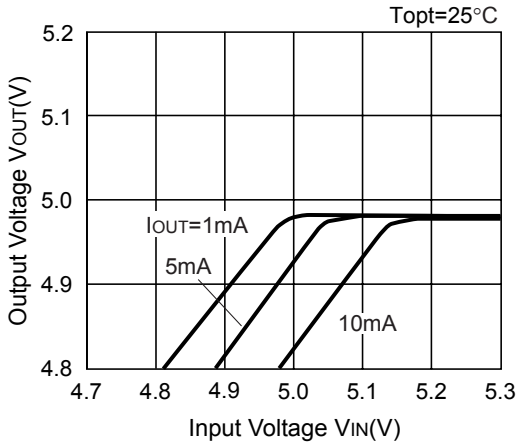

Rx5RW50B

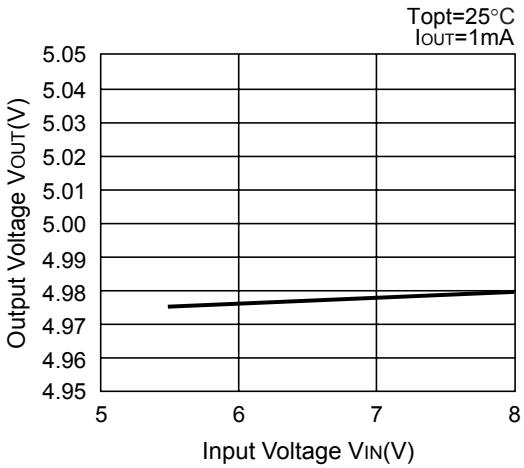

3) Dropout Voltage vs. Output Current

Rx5RW30B

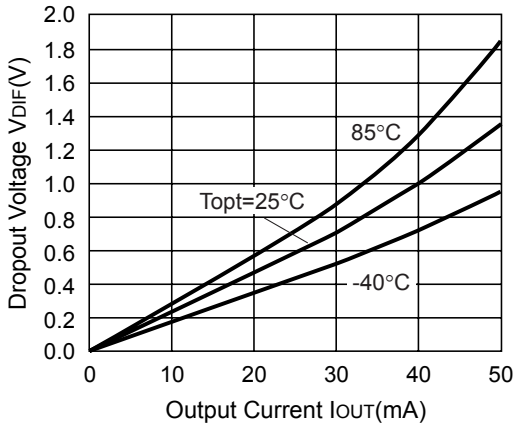

Rx5RW40B

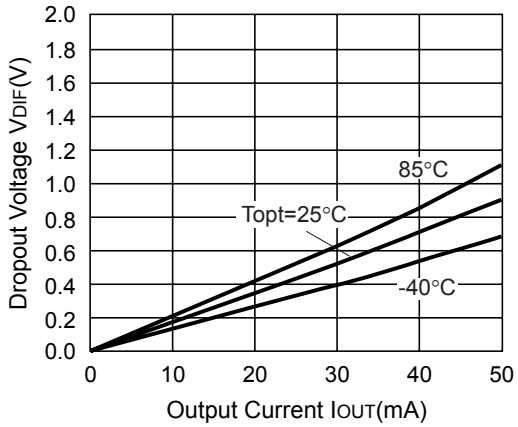

Rx5RW50B

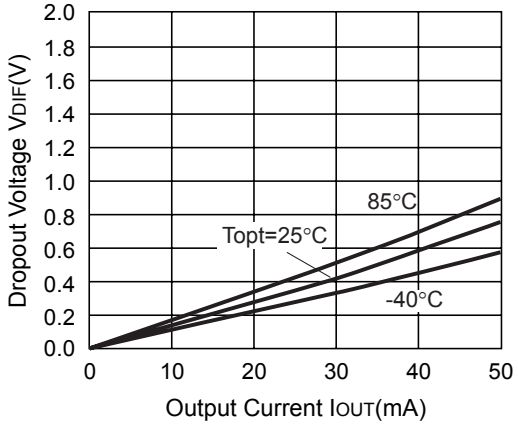

4) Output Voltage vs. Temperature

Rx5RW30B

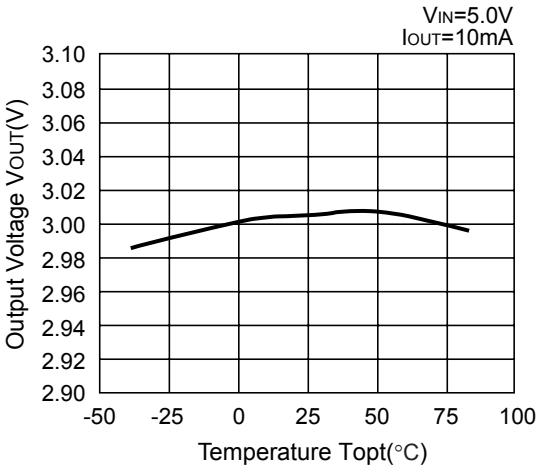

Rx5RW40B

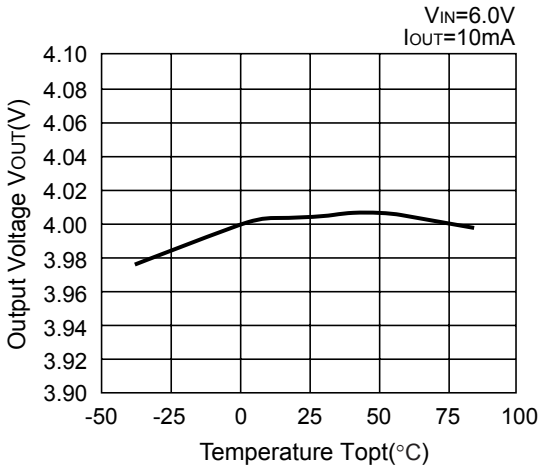

Rx5RW50B

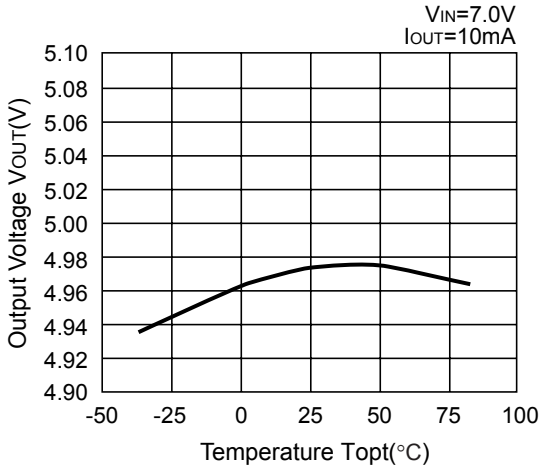

5) Supply Current vs. Input Voltage

Rx5RW30B

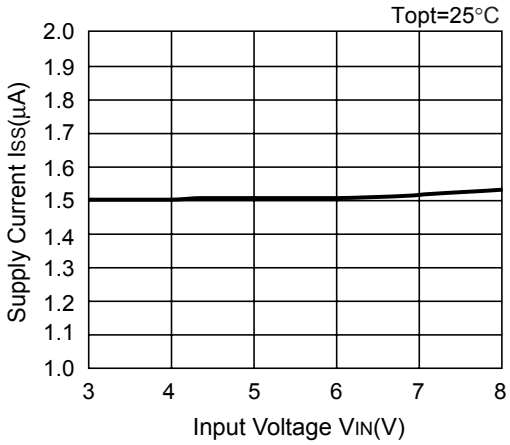

Rx5RW40B

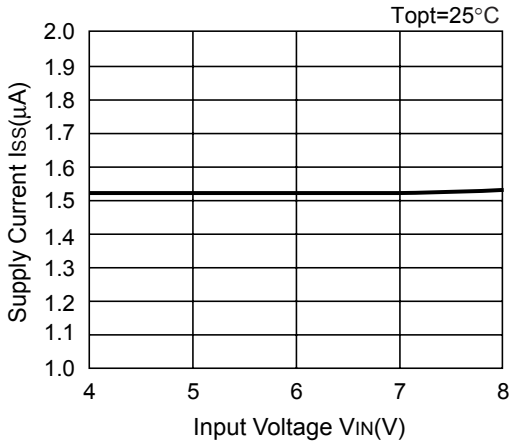

Rx5RW50B

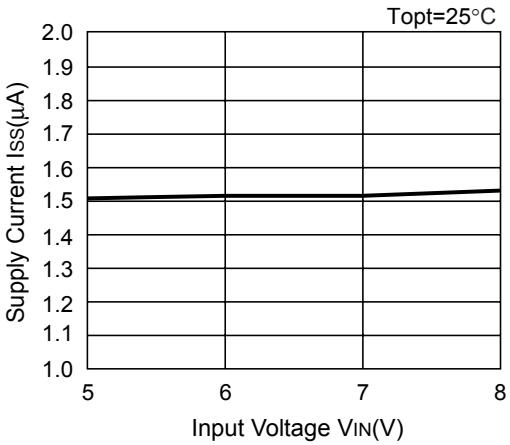

6) Supply Current vs. Temperature

Rx5RW30B

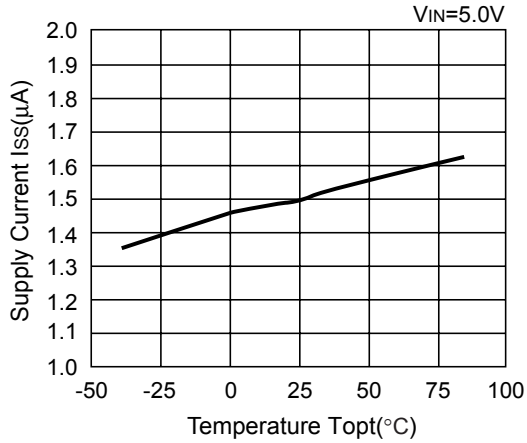

Rx5RW40B

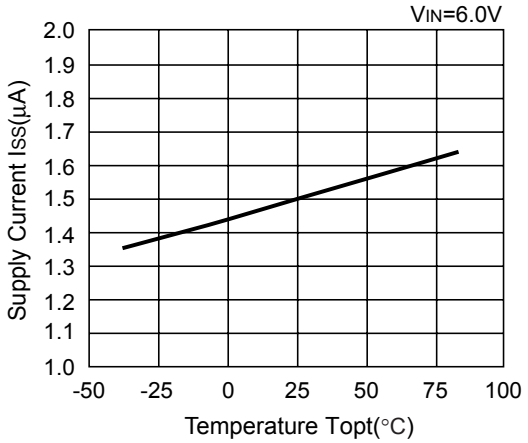

Rx5RW50B

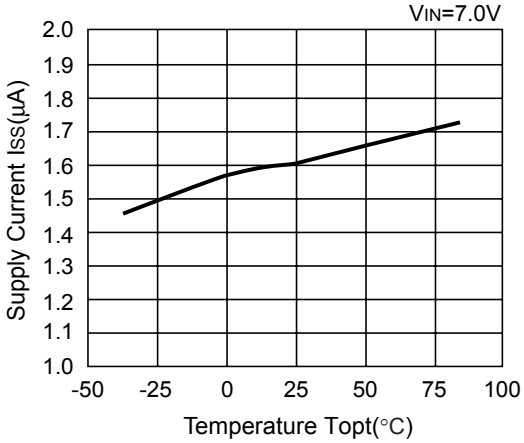

7) Dropout Voltage vs. Set Output Voltage

Rx5RWxxB

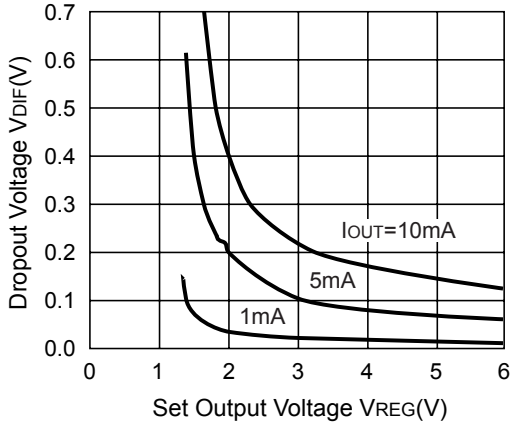

8) Line Transient Response

Rx5RW30B

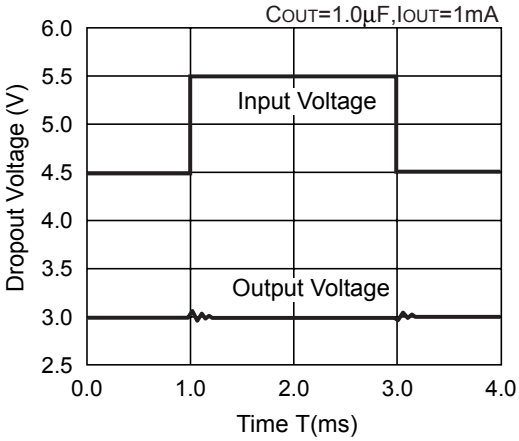

Rx5RW30B

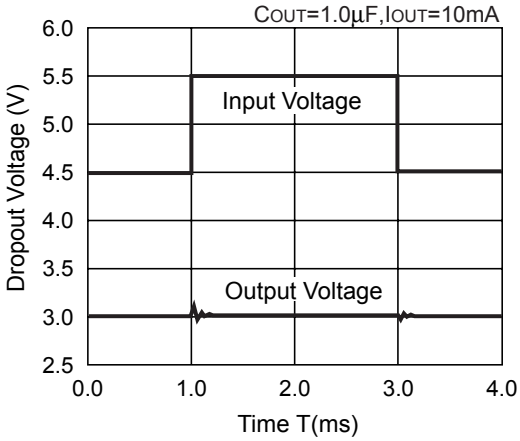

Rx5RW40B

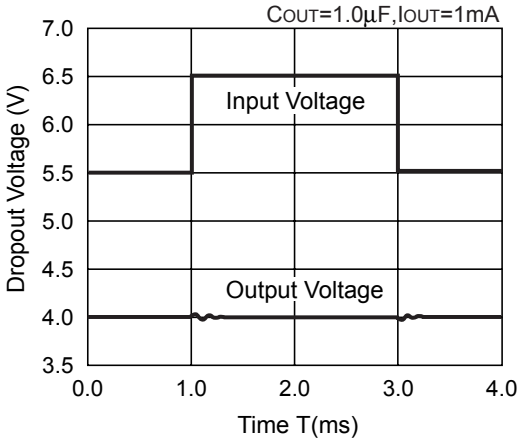

Rx5RW40B

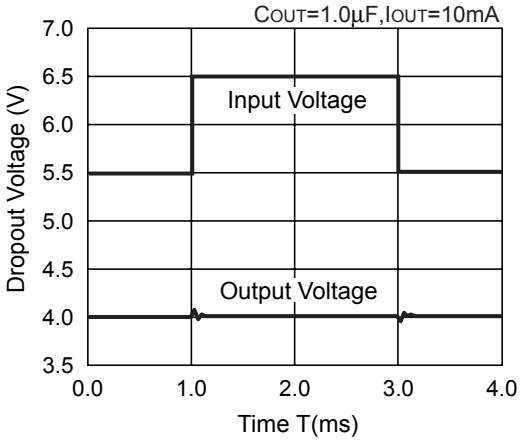

Rx5RW50B

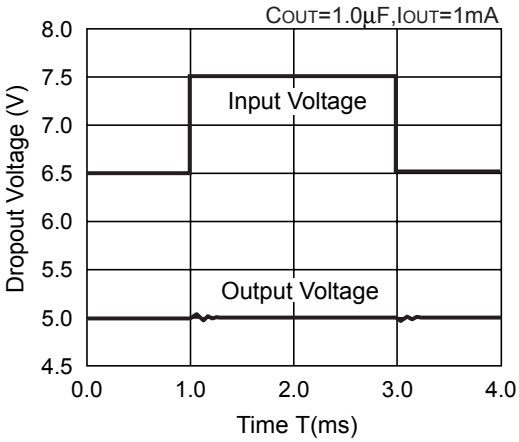

Rx5RW50B

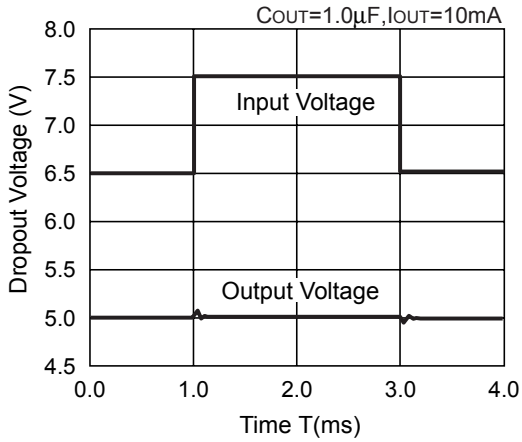

9) Load Transient Response

Rx5RW30B

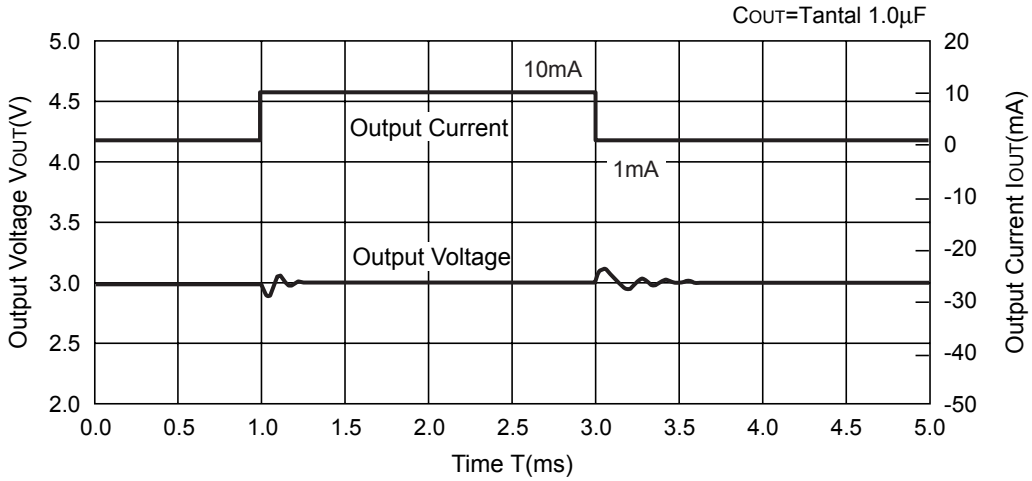

Rx5RW40B

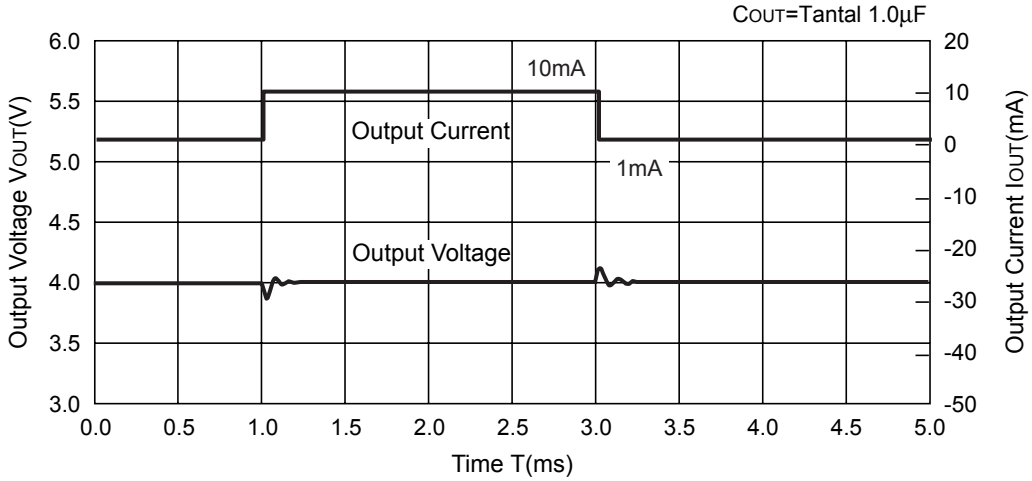

Rx5RW50B

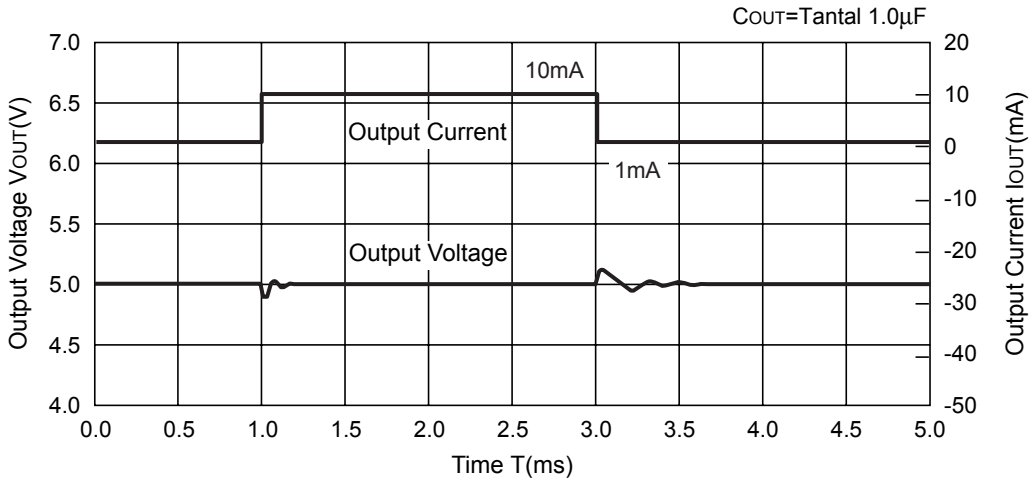

10) Ripple Rejection

Rx5RW30B

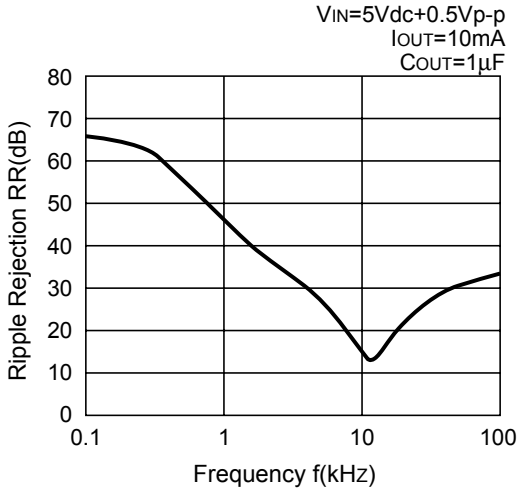

Rx5RW40B

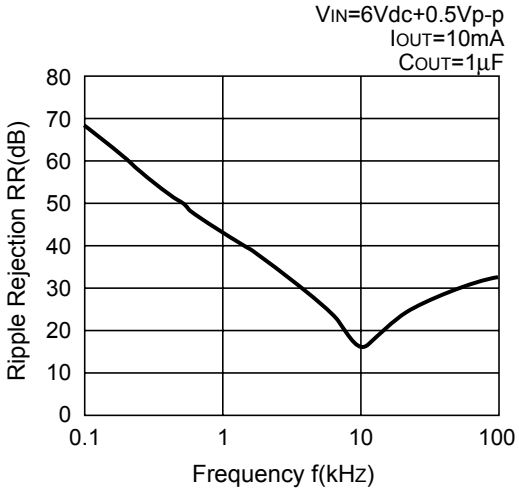

Rx5RW50B

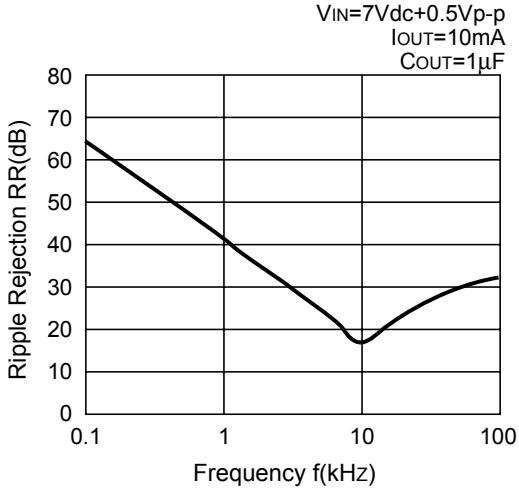

- **SC-82AB**

Unit: mm

PACKAGE DIMENSIONS

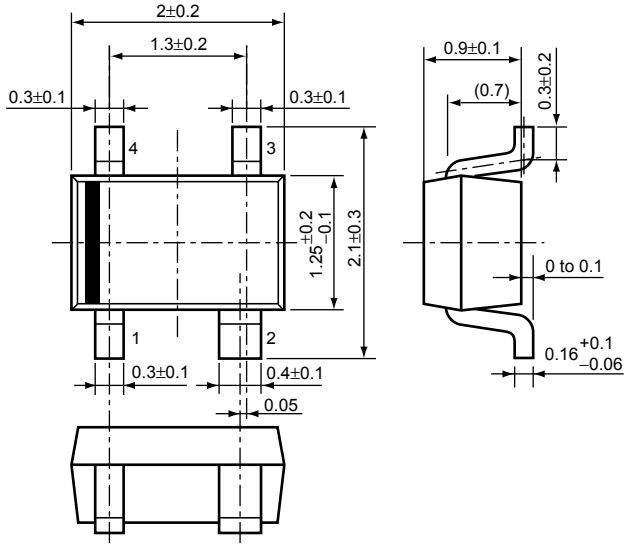

TAPING SPECIFICATION

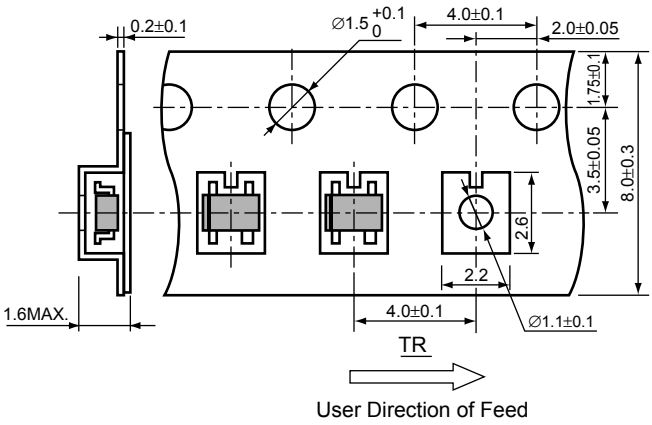

TAPING REEL DIMENSIONS

(1reel=3000pcs)

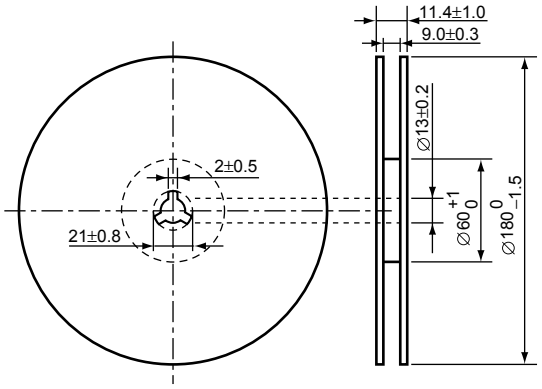

POWER DISSIPATION (SC-82AB)

This specification is at mounted on board. Power Dissipation (P_D) depends on conditions of mounting on board. This specification is based on the measurement at the condition below:

Measurement Conditions

	Standard Land Pattern
Environment	Mounting on Board (Wind velocity=0m/s)
Board Material	Glass cloth epoxy plactic (Double sided)
Board Dimensions	40mm × 40mm × 1.6mm
Copper Ratio	Top side : Approx. 50% , Back side : Approx. 50%
Through-hole	ϕ0.5mm × 44pcs

Measurement Result

(Topt=25°C,Tjmax=125°C)

	Standard Land Pattern	Free Air
Power Dissipation	380mW	150mW
Thermal Resistance	θja=(125−25°C)/0.38W=263°C/W	667°C/W

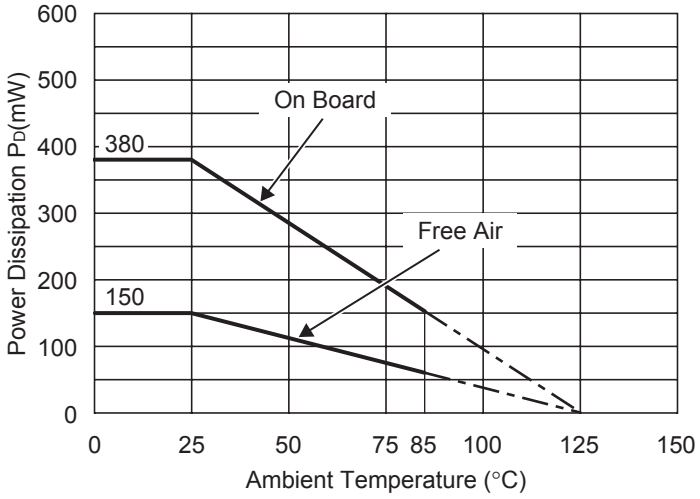

Power Dissipation

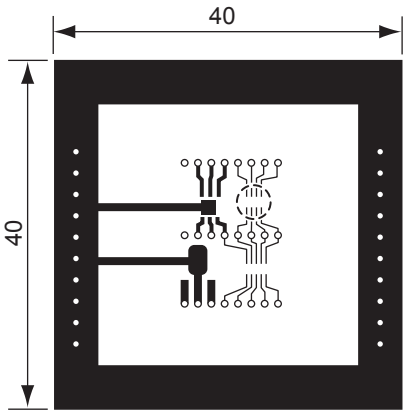

Measurement Board Pattern

IC Mount Area (Unit : mm)

RECOMMENDED LAND PATTERN

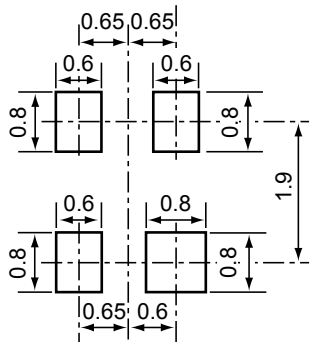

(Unit: mm)

- **SON1612-6**

Unit: mm

PACKAGE DIMENSIONS

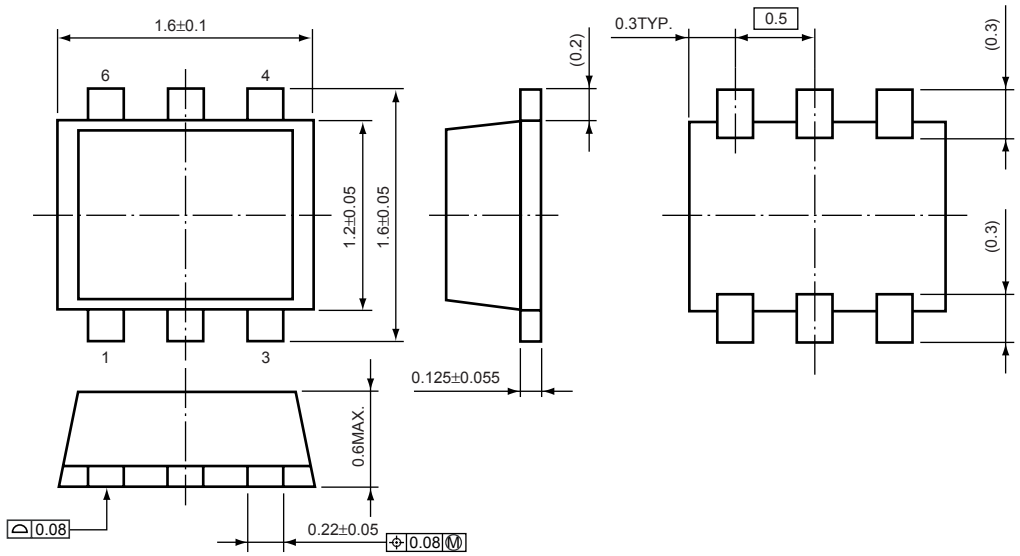

TAPING SPECIFICATION

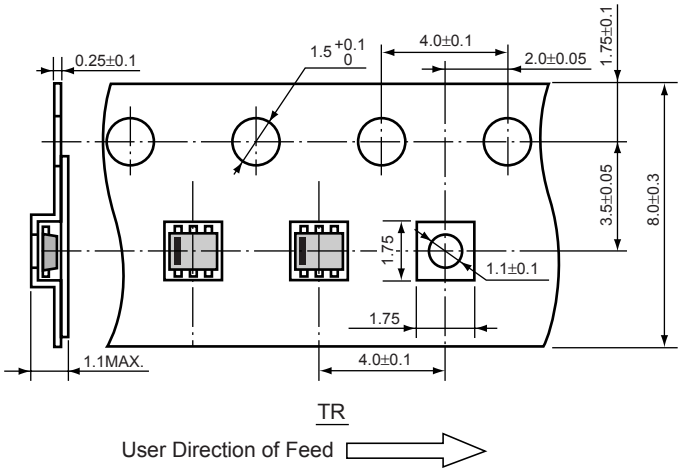

TAPING REEL DIMENSIONS

(1reel=4000pcs)

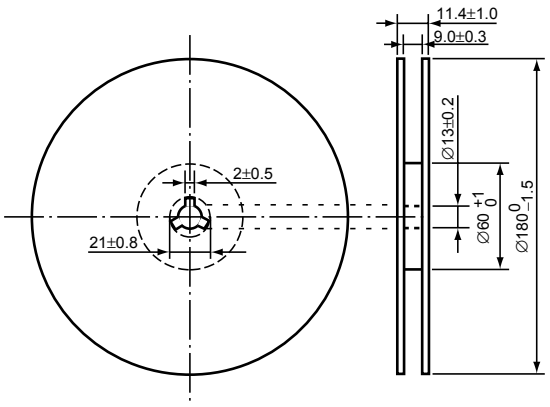

Power Dissipation (SON1612-6)

This specification is at mounted on board.
Power Dissipation (P_D) depends on conditions of mounting on board. This specification is based on the measurement at the condition below:

Measurement Conditions

	Standard Land Pattern
Environment	Mounting on Board (Wind velocity=0m/s)
Board Material	Glass cloth epoxy plactic (Double sided)
Board Dimensions	40mm × 40mm × 1.6mm
Copper Ratio	Top side : Approx. 50%, Back side : Approx.50%
Through-hole	ϕ0.5mm × 24pcs

Measurement Result

(Topt=25°C,Tjmax=125°C)

	Standard Land Pattern
Power Dissipation	500mW
Thermal Resistance	θja=(125−25°C)/0.5W=200°C/W

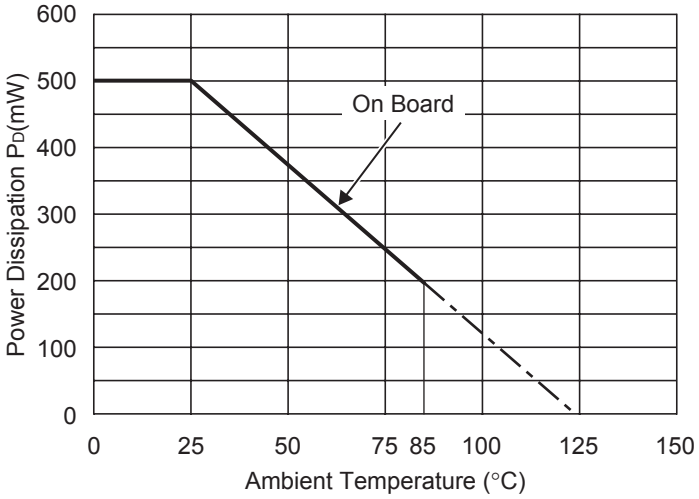

Power Dissipation

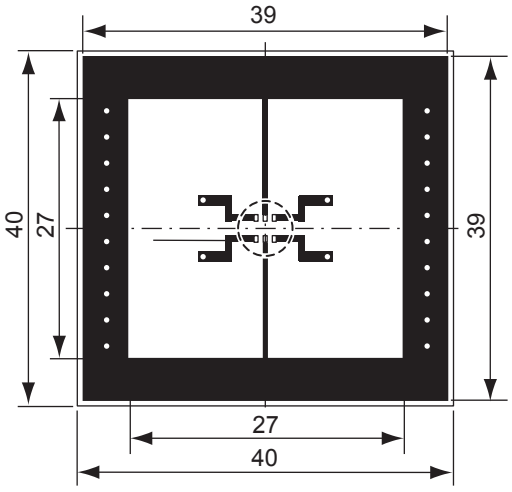

Measurement Board Pattern

IC Mount Area Unit : mm

RECOMMENDED LAND PATTERN

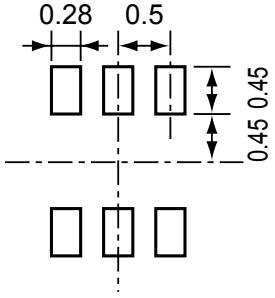

(Unit: mm)

RQ5RW SERIES MARK SPECIFICATION

- **SC-82AB**

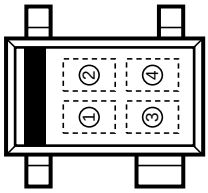

①, ② : Product Code (refer to Part Number vs. Product Code)

③, ④ : Lot Number

- **Part Number vs. Product Code**

Part Number	Product Code	
	①	②
RQ5RW20AA	2	A
RQ5RW21AA	2	B
RQ5RW22AA	2	C
RQ5RW23AA	2	D
RQ5RW24AA	2	E
RQ5RW25AA	2	F
RQ5RW26AA	2	G
RQ5RW27AA	2	H
RQ5RW28AA	2	J
RQ5RW29AA	2	K
RQ5RW30AA	3	A
RQ5RW31AA	3	B
RQ5RW32AA	3	C
RQ5RW33AA	3	D
RQ5RW34AA	3	E
RQ5RW35AA	3	F
RQ5RW36AA	3	G
RQ5RW37AA	3	H
RQ5RW38AA	3	J
RQ5RW39AA	3	K
RQ5RW40AA	4	A
RQ5RW41AA	4	B
RQ5RW42AA	4	C
RQ5RW43AA	4	D
RQ5RW44AA	4	E
RQ5RW45AA	4	F
RQ5RW46AA	4	G
RQ5RW47AA	4	H
RQ5RW48AA	4	J
RQ5RW49AA	4	K
RQ5RW50AA	5	A
RQ5RW51AA	5	B
RQ5RW52AA	5	C
RQ5RW53AA	5	D

Part Number	Product Code	
	①	②
RQ5RW54AA	5	E
RQ5RW55AA	5	F
RQ5RW56AA	5	G
RQ5RW57AA	5	H
RQ5RW58AA	5	J
RQ5RW59AA	5	K
RQ5RW60AA	6	A
RQ5RW19AA	6	B
RQ5RW18AA	6	C
RQ5RW17AA	6	D
RQ5RW16AA	6	E
RQ5RW15AA	6	F
RQ5RW20BA	7	A
RQ5RW21BA	7	B
RQ5RW22BA	7	C
RQ5RW23BA	7	D
RQ5RW24BA	7	E
RQ5RW25BA	7	F
RQ5RW26BA	7	G
RQ5RW27BA	7	H
RQ5RW28BA	7	J
RQ5RW29BA	7	K
RQ5RW30BA	8	A
RQ5RW31BA	8	B
RQ5RW32BA	8	C
RQ5RW33BA	8	D
RQ5RW34BA	8	E
RQ5RW35BA	8	F
RQ5RW36BA	8	G
RQ5RW37BA	8	H
RQ5RW38BA	8	J
RQ5RW39BA	8	K
RQ5RW40BA	9	A
RQ5RW41BA	9	B

Part Number	Product Code	
	①	②
RQ5RW42BA	9	C
RQ5RW43BA	9	D
RQ5RW44BA	9	E
RQ5RW45BA	9	F
RQ5RW46BA	9	G
RQ5RW47BA	9	H
RQ5RW48BA	9	J
RQ5RW49BA	9	K
RQ5RW50BA	0	A
RQ5RW51BA	0	B
RQ5RW52BA	0	C
RQ5RW53BA	0	D
RQ5RW54BA	0	E
RQ5RW55BA	0	F
RQ5RW56BA	0	G
RQ5RW57BA	0	H
RQ5RW58BA	0	J
RQ5RW59BA	0	K
RQ5RW60BA	1	A
RQ5RW19BA	1	B
RQ5RW18BA	1	C
RQ5RW17BA	1	D
RQ5RW16BA	1	E
RQ5RW15BA	1	F
RQ5RW20CA	2	L
RQ5RW21CA	2	M
RQ5RW22CA	2	N
RQ5RW23CA	2	P
RQ5RW24CA	2	R
RQ5RW25CA	2	S
RQ5RW26CA	2	T
RQ5RW27CA	2	U
RQ5RW28CA	2	V
RQ5RW29CA	2	W

Part Number	Product Code	
	①	②
RQ5RW30CA	3	L
RQ5RW31CA	3	M
RQ5RW32CA	3	N
RQ5RW33CA	3	P
RQ5RW34CA	3	R
RQ5RW35CA	3	S
RQ5RW36CA	3	T
RQ5RW37CA	3	U
RQ5RW38CA	3	V
RQ5RW39CA	3	W
RQ5RW40CA	4	L
RQ5RW41CA	4	M
RQ5RW42CA	4	N
RQ5RW43CA	4	P
RQ5RW44CA	4	R
RQ5RW45CA	4	S
RQ5RW46CA	4	T
RQ5RW47CA	4	U
RQ5RW48CA	4	V
RQ5RW49CA	4	W
RQ5RW50CA	5	L
RQ5RW51CA	5	M
RQ5RW52CA	5	N
RQ5RW53CA	5	P
RQ5RW54CA	5	R
RQ5RW55CA	5	S
RQ5RW56CA	5	T
RQ5RW57CA	5	U
RQ5RW58CA	5	V
RQ5RW59CA	5	W
RQ5RW60CA	6	L
RQ5RW19CA	6	M
RQ5RW18CA	6	N
RQ5RW17CA	6	P
RQ5RW16CA	6	S

RD5RW SERIES MARK SPECIFICATION

- **SON1612-6**

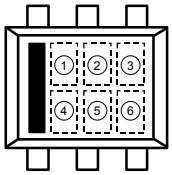

①～④ : Product Code (refer to Part Number vs. Product Code)

⑤, ⑥ : Lot Number

- **Part Number vs. Product Code**

Part Number	Product Code			
	①	②	③	④
RD5RW15AA	E	1	5	A
RD5RW16AA	E	1	6	A
RD5RW17AA	E	1	7	A
RD5RW18AA	E	1	8	A
RD5RW19AA	E	1	9	A
RD5RW20AA	E	2	0	A
RD5RW21AA	E	2	1	A
RD5RW22AA	E	2	2	A
RD5RW23AA	E	2	3	A
RD5RW24AA	E	2	4	A
RD5RW25AA	E	2	5	A
RD5RW26AA	E	2	6	A
RD5RW27AA	E	2	7	A
RD5RW28AA	E	2	8	A
RD5RW29AA	E	2	9	A
RD5RW30AA	E	3	0	A
RD5RW31AA	E	3	1	A
RD5RW32AA	E	3	2	A
RD5RW33AA	E	3	3	A
RD5RW34AA	E	3	4	A
RD5RW35AA	E	3	5	A
RD5RW36AA	E	3	6	A
RD5RW37AA	E	3	7	A
RD5RW38AA	E	3	8	A
RD5RW39AA	E	3	9	A
RD5RW40AA	E	4	0	A
RD5RW41AA	E	4	1	A
RD5RW42AA	E	4	2	A
RD5RW43AA	E	4	3	A
RD5RW44AA	E	4	4	A
RD5RW45AA	E	4	5	A
RD5RW46AA	E	4	6	A
RD5RW47AA	E	4	7	A
RD5RW48AA	E	4	8	A
RD5RW49AA	E	4	9	A
RD5RW50AA	E	5	0	A

Part Number	Product Code			
	①	②	③	④
RD5RW51AA	E	5	1	A
RD5RW52AA	E	5	2	A
RD5RW53AA	E	5	3	A
RD5RW54AA	E	5	4	A
RD5RW55AA	E	5	5	A
RD5RW56AA	E	5	6	A
RD5RW57AA	E	5	7	A
RD5RW58AA	E	5	8	A
RD5RW59AA	E	5	9	A
RD5RW60AA	E	6	0	A
RD5RW15BA	E	1	5	B
RD5RW16BA	E	1	6	B
RD5RW17BA	E	1	7	B
RD5RW18BA	E	1	8	B
RD5RW19BA	E	1	9	B
RD5RW20BA	E	2	0	B
RD5RW21BA	E	2	1	B
RD5RW22BA	E	2	2	B
RD5RW23BA	E	2	3	B
RD5RW24BA	E	2	4	B
RD5RW25BA	E	2	5	B
RD5RW26BA	E	2	6	B
RD5RW27BA	E	2	7	B
RD5RW28BA	E	2	8	B
RD5RW29BA	E	2	9	B
RD5RW30BA	E	3	0	B
RD5RW31BA	E	3	1	B
RD5RW32BA	E	3	2	B
RD5RW33BA	E	3	3	B
RD5RW34BA	E	3	4	B
RD5RW35BA	E	3	5	B
RD5RW36BA	E	3	6	B
RD5RW37BA	E	3	7	B
RD5RW38BA	E	3	8	B
RD5RW39BA	E	3	9	B
RD5RW40BA	E	4	0	B

Part Number	Product Code			
	①	②	③	④
RD5RW41BA	E	4	1	B
RD5RW42BA	E	4	2	B
RD5RW43BA	E	4	3	B
RD5RW44BA	E	4	4	B
RD5RW45BA	E	4	5	B
RD5RW46BA	E	4	6	B
RD5RW47BA	E	4	7	B
RD5RW48BA	E	4	8	B
RD5RW49BA	E	4	9	B
RD5RW50BA	E	5	0	B
RD5RW51BA	E	5	1	B
RD5RW52BA	E	5	2	B
RD5RW53BA	E	5	3	B
RD5RW54BA	E	5	4	B
RD5RW55BA	E	5	5	B
RD5RW56BA	E	5	6	B
RD5RW57BA	E	5	7	B
RD5RW58BA	E	5	8	B
RD5RW59BA	E	5	9	B
RD5RW60BA	E	6	0	B
RD5RW15CA	E	1	5	C
RD5RW16CA	E	1	6	C
RD5RW17CA	E	1	7	C
RD5RW18CA	E	1	8	C
RD5RW19CA	E	1	9	C
RD5RW20CA	E	2	0	C
RD5RW21CA	E	2	1	C
RD5RW22CA	E	2	2	C
RD5RW23CA	E	2	3	C
RD5RW24CA	E	2	4	C
RD5RW25CA	E	2	5	C
RD5RW26CA	E	2	6	C
RD5RW27CA	E	2	7	C
RD5RW28CA	E	2	8	C
RD5RW29CA	E	2	9	C
RD5RW30CA	E	3	0	C

Part Number	Product Code			
	①	②	③	④
RD5RW31CA	E	3	1	C
RD5RW32CA	E	3	2	C
RD5RW33CA	E	3	3	C
RD5RW34CA	E	3	4	C
RD5RW35CA	E	3	5	C
RD5RW36CA	E	3	6	C
RD5RW37CA	E	3	7	C
RD5RW38CA	E	3	8	C
RD5RW39CA	E	3	9	C
RD5RW40CA	E	4	0	C
RD5RW41CA	E	4	1	C
RD5RW42CA	E	4	2	C
RD5RW43CA	E	4	3	C
RD5RW44CA	E	4	4	C
RD5RW45CA	E	4	5	C
RD5RW46CA	E	4	6	C
RD5RW47CA	E	4	7	C
RD5RW48CA	E	4	8	C
RD5RW49CA	E	4	9	C
RD5RW50CA	E	5	0	C
RD5RW51CA	E	5	1	C
RD5RW52CA	E	5	2	C
RD5RW53CA	E	5	3	C
RD5RW54CA	E	5	4	C
RD5RW55CA	E	5	5	C
RD5RW56CA	E	5	6	C
RD5RW57CA	E	5	7	C
RD5RW58CA	E	5	8	C
RD5RW59CA	E	5	9	C
RD5RW60CA	E	6	0	C