Built-in EEPROM and Unique ID-ROM
I²C-Bus INTERFACE REAL TIME CLOCK MODULE

RX - 8731 LC

- Built in frequency adjusted 32.768 kHz crystal unit.
- Interface Type : I²C-Bus interface (400 kHz)
- Operating voltage range : 1.7 V to 5.5 V
- Wide Timekeeper voltage range : 1.3 V to 5.5 V
- Low backup current : 0.35 µA / 3 V (Typ.)
- 32.768 kHz frequency output function : C-MOS output With Control Pin
- The various functions include full calendar, alarm, timer.

* The I²C-Bus is a trademark of NXP Semiconductors

RoHS Compliant

Product Number (Please contact us)
RX-8731LC : Q418731C1000100

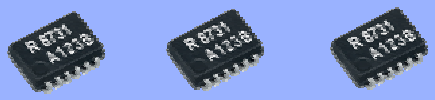

Actual size

Block diagram

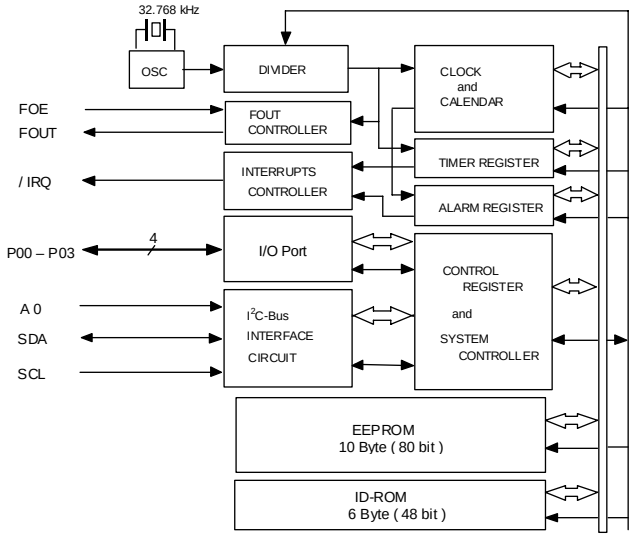

Overview

- **Built in EEPROM and ID-ROM**
  - Built in 10 Byte (80 bit) EEPROM
  - Built in 6 Byte (48 bit) ID-ROM
- **Programmable I/O ports**
  - 4 Programmable I/O ports
- **Interface Type**
  - I²C-Bus high-speed bus specifications. (400 kHz)
- **32.768 kHz frequency output function**
  - FOUT pin output (C-MOS output), CL=30 pF
  - FOE pin enables output on/off control.
  - Output frequency is selectable.
    < 32.768 kHz, 1024 Hz, 1 Hz >
- **The various interrupt function**
  - Alarm interrupt function
  - Timer interrupt function
  - Update interrupt function

Pin Function

Signal Name	Input / Output	Function
SCL	Input	Serial Clock input pin.
SDA	Bi-directional	Data input and output pin.
A 0	Input	Device address A0 input pin.
FOUT	Output	FOUT pin is 32.768 kHz clock output pin (C-MOS) that output control is possible. FOE pin control the frequency output from FOUT pin with FSEL1-bit and FSEL0-bit.
FOE	Input	
/ IRQ	Output	Interrupt output pin. (N-ch open drain)
P00 P01 P02 P03	Bi-directional	Programmable I/O ports.
VDD	—	Connected to a positive power supply.
GND	—	Connected to a ground.

Terminal connection / External dimensions (Unit:mm)

RX – 8731 LC

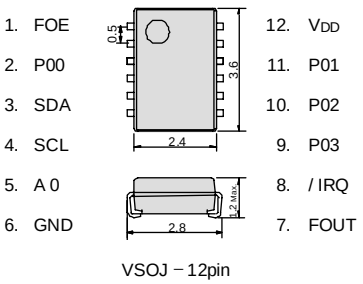

VSOJ – 12pin

Specifications (characteristics)

* Refer to application manual for details.

Recommended Operating Conditions

Item	Symbol	Condition	Min.	Typ.	Max.	Unit
Power voltage	VDD	—	1.7	3.0	5.5	V
Clock voltage	VCLK	—	1.3	3.0	5.5	V
Operating temperature	TOPR	—	-40	+25	+85	°C

Frequency characteristics

Item	Symbol	Condition	Rating	Unit
Frequency tolerance	Δf / f	Ta = +25 °C VDD = 3.0 V	5 ± 23 *	× 10⁻⁶
Oscillation Start-up time	tSTA	Ta = +25 °C VDD = 1.6 V	1 Max.	s
		Ta = -40 °C to +85 °C VDD = 1.6 V	3 Max.	s

*Equivalent to 1 minute of monthly deviation

Current consumption characteristics

Ta = –40 °C to +70 °C

Item	Symbol	Condition		Min.	Typ.	Max.	Unit
Current Consumption	IBK	fSCL = 0 Hz / IRQ = OFF FOUT : output OFF (Hi - z)	VDD = 5 V		0.45	0.9	µA
			VDD = 3 V		0.35	0.7	
	I32k	fSCL = 0 Hz / IRQ = OFF FOUT : 32.768 kHz output CL = 30 pF	VDD = 5 V		8.0	16.0	µA
			VDD = 3 V		5.0	10.0	

“QMEMS” EPSON TOYOCOM

In order to meet customer needs in a rapidly advancing digital, broadband and ubiquitous society, we are committed to offering products that are one step ahead of the market and a rank above the rest in quality. To achieve our goals, we follow a “3D (three device) strategy” designed to drive both horizontal and vertical growth. We will to grow our three device categories of “Timing Devices”, ”Sensing Devices” and “Optical Devices”, and expand vertical growth through a combination of products from these categories.
A Quartz MEMS is any high added value quartz device that exploits the characteristics of quartz crystal material but that is produced using MEMS (micro-electro-mechanical system) processing technology.
Market needs are advancing faster than previously imagined toward smaller, more stable crystal products, but we will stay ahead of the curve by rolling out products that exceed market speed and quality requirements. We want to further accelerate the 3D strategy by QMEMS.

Quartz devices have become crucial in the network environment where products are increasingly intended for broadband, ubiquitous applications and where various types of terminals can transfer information almost immediately via LAN and WAN on a global scale. Epson Toyocom Corporation addresses every single aspect within a network environment. The new corporation offers “Digital Convergence” solutions to problems arising with products for consumer use, such as, core network systems and automotive systems.

QMEMS

PROMOTION OF ENVIRONMENTAL MANAGEMENT SYSTEM CONFORMING TO INTERNATIONAL STANDARDS

At Epson Toyocom, all environmental initiatives operate under the Plan-Do-Check-Action(PDCA) cycle designed to achieve continuous improvements. The environmental management system (EMS) operates under the ISO 14001 environmental management standard.

ISO 14000 is an international standard for environmental management that was established by the International Standards Organization in 1996 against the background of growing concern regarding global warming, destruction of the ozone layer, and global deforestation.

All of our major manufacturing and non-manufacturing sites,in Japan and overseas, completed the acquisition of ISO 14001 certification.
In the future, new group companies will be expected to acquire the certification around the third year of operations.

WORKING FOR HIGH QUALITY

In order provide high quality and reliable products and services than meet customer needs,
Epson Toyocom made early efforts towards obtaining ISO9000 series certification and has acquired ISO9001 for all business establishments in Japan and abroad. We have also acquired ISO/TS 16949 certification that is requested strongly by major automotive manufacturers as standard.

QS-9000 is an enhanced standard for quality assurance systems formulated by leading U.S. automobile manufacturers based on the international ISO 9000 series.

ISO/TS 16949 is a global standard based on QS-9000, a severe standard corresponding to the requirements from the automobile industry.

►Explanation of the mark that are using it for the catalog

Pb Free	**►Pb free.** **►Complies with EU RoHS directive.**
RoHS Compliant	**►Pb free terminal designed. Contains Pb in products exempted by RoHS directive.** **(Contains Pb in sealing glass, high melting temperature type solder or other.)** **►Complies with EU RoHS directive.**
For Automotive	**►The products have been designed for high reliability applications such as Automotive.**

Notice

- This material is subject to change without notice.
- Any part of this material may not be reproduced or duplicated in any form or any means without the written permission of Epson Toyocom.
- The information, applied circuitry, programming, usage, etc., written in this material is intended for reference only. Epson Toyocom does not assume any liability for the occurrence of infringing on any patent or copyright of a third party. This material does not authorize the licensing for any patent or intellectual copyrights.
- Any product described in this material may contain technology or the subject relating to strategic products under the control of the Foreign Exchange and Foreign Trade Law of Japan and may require an export license from the Ministry of International Trade and Industry or other approval from another government agency.
- You are requested not to use the products (and any technical information furnished, if any) for the development and/or manufacture of weapon of mass destruction or for other military purposes. You are also requested that you would not make the products available to any third party who may use the products for such prohibited purposes.
- These products are intended for general use in electronic equipment. When using them in specific applications that require extremely high reliability, such as the applications stated below, you must obtain permission from Epson Toyocom in advance.
  / Space equipment (artificial satellites, rockets, etc.) / Transportation vehicles and related (automobiles, aircraft, trains, vessels, etc.)
  / Medical instruments to sustain life / Submarine transmitters / Power stations and related / Fire work equipment and security equipment
  / traffic control equipment / and others requiring equivalent reliability.
- In this new crystal master for Epson Toyocom, product codes and markings will remain as previously identified prior to the merger.
  Due to the on-going strategy of gradual unification of part numbers, please review product codes and markings, as they will change during the course of the coming months.

  We apologize for the inconvenience, but we will eventually have a unified part numbering system for Epson Toyocom that will be user friendly.