RU6Z5R

N-Channel Advanced Power MOSFET

Features

- 650V/4.5A,
  $R_{DS(ON)}$ =1.8Ω (Typ.)@V_{GS}=10V
- Super High Dense Cell Design
- Fast Switching
- 100% avalanche tested
- Lead Free and Green Devices Available
  (RoHS Compliant)

Pin Description



TO-220

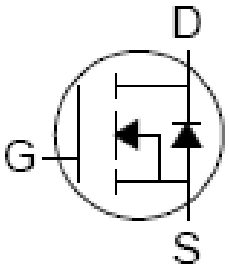

N-Channel MOSFET

Applications

- High efficiency switch mode power supplies
- Lighting

Absolute Maximum Ratings

Symbol	Parameter		Rating	Unit
Common Ratings (T_C=25°C Unless Otherwise Noted)				
V_{DSS}	Drain-Source Voltage		650	V
V_{GSS}	Gate-Source Voltage		±30	
T_J	Maximum Junction Temperature		150	°C
T_{STG}	Storage Temperature Range		-55 to 150	°C
I_S	Diode Continuous Forward Current	T_C=25°C	4.5①	A
Mounted on Large Heat Sink				
I_{DP}	300μs Pulse Drain Current Tested	T_C=25°C	18②	A
I_D	Continuous Drain Current(V_{GS}=10V)	T_C=25°C	4.5①	A
		T_C=100°C	2.8	
P_D	Maximum Power Dissipation	T_C=25°C	83	W
		T_C=100°C	33	W
$R_{\theta JC}$	Thermal Resistance-Junction to Case		1.5	°C/W
Drain-Source Avalanche Ratings				
E_{AS}③	Avalanche Energy, Single Pulsed		157	mJ

Copyright© Ruichips Semiconductor Co., Ltd

Electrical Characteristics (T_C=25°C Unless Otherwise Noted)

Symbol	Parameter	Test Condition	RU6Z5R			Unit
			Min.	Typ.	Max.	
Static Characteristics						
BV_{DSS}	Drain-Source Breakdown Voltage	V_{GS}=0V, I_{DS}=250μA	650			V
I_{DSS}	Zero Gate Voltage Drain Current	V_{DS}= 650V, V_{GS}=0V			1	μA
		T_J=85°C			30	
$V_{GS(th)}$	Gate Threshold Voltage	V_{DS}=V_{GS}, I_{DS}=250μA	2		4	V
I_{GSS}	Gate Leakage Current	V_{GS}=±30V, V_{DS}=0V			±100	nA
$R_{DS(ON)}$ ④	Drain-Source On-state Resistance	V_{GS}= 10V, I_{DS}=2.25A		1.8	2.3	Ω
Diode Characteristics						
V_{SD} ④	Diode Forward Voltage	I_{SD}=4.5A, V_{GS}=0V			1.5	V
t_{rr}	Reverse Recovery Time	I_{SD}=4.5A, dI_{SD}/dt=100A/μs		160		ns
Q_{rr}	Reverse Recovery Charge			1.5		μC
Dynamic Characteristics ⑤						
R_G	Gate Resistance	V_{GS}=0V,V_{DS}=0V,F=1MHz		4.7		Ω
C_{iss}	Input Capacitance	V_{GS}=0V, V_{DS}= 25V, Frequency=1.0MHz		650		pF
C_{oss}	Output Capacitance			80		
C_{rss}	Reverse Transfer Capacitance			9		
$t_{d(ON)}$	Turn-on Delay Time	V_{DD}=325V, R_L=72Ω, I_{DS}=4.5A, V_{GEN}= 10V, R_G=25Ω		30		ns
t_r	Turn-on Rise Time			110		
$t_{d(OFF)}$	Turn-off Delay Time			65		
t_f	Turn-off Fall Time			80		
Gate Charge Characteristics ⑤						
Q_g	Total Gate Charge	V_{DS}=520V, V_{GS}= 10V, I_{DS}=4.5A		20		nC
Q_{gs}	Gate-Source Charge			3.5		
Q_{gd}	Gate-Drain Charge			7.0		

Notes: ①Calculated continuous current based on maximum allowable junction temperature.
②Pulse width limited by safe operating area.
③Limited by T_{Jmax}, I_{AS} =5.6A, V_{DD} = 100V, R_G = 50Ω , Starting T_J = 25°C.
④Pulse test ; Pulse width≤300μs, duty cycle≤2%.
⑤Guaranteed by design, not subject to production testing.

Copyright© Ruichips Semiconductor Co., Ltd

Typical Characteristics

Power Dissipation

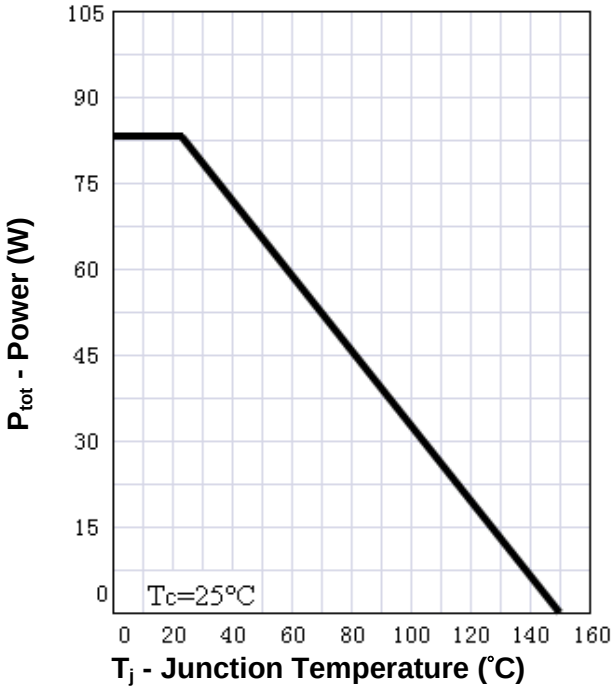

Drain Current

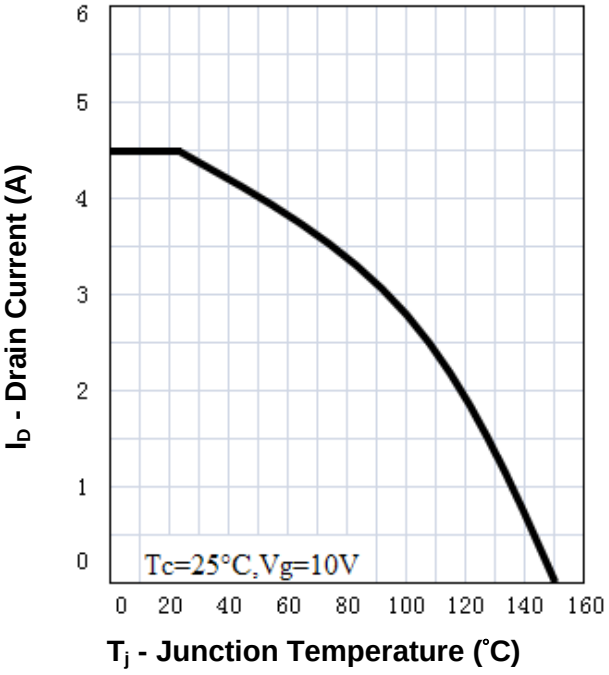

Safe Operation Area

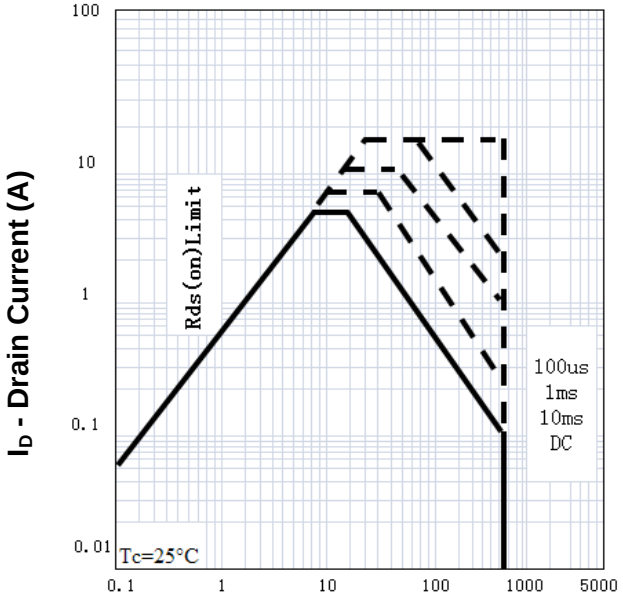

Thermal Transient Impedance

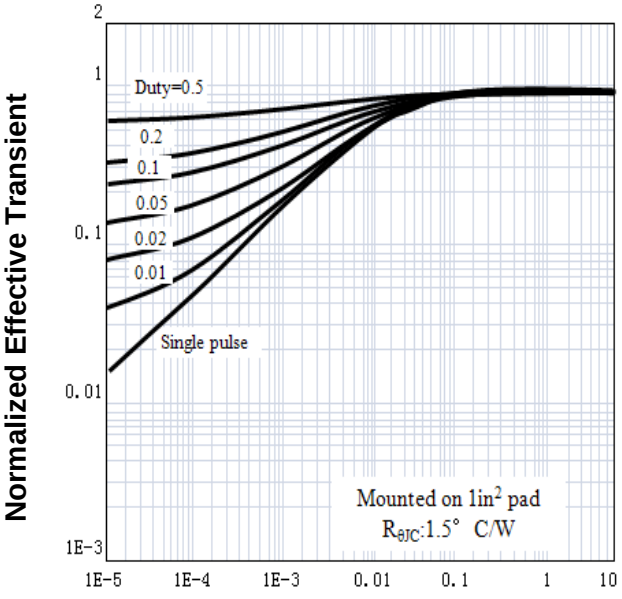

Typical Characteristics

Output Characteristics

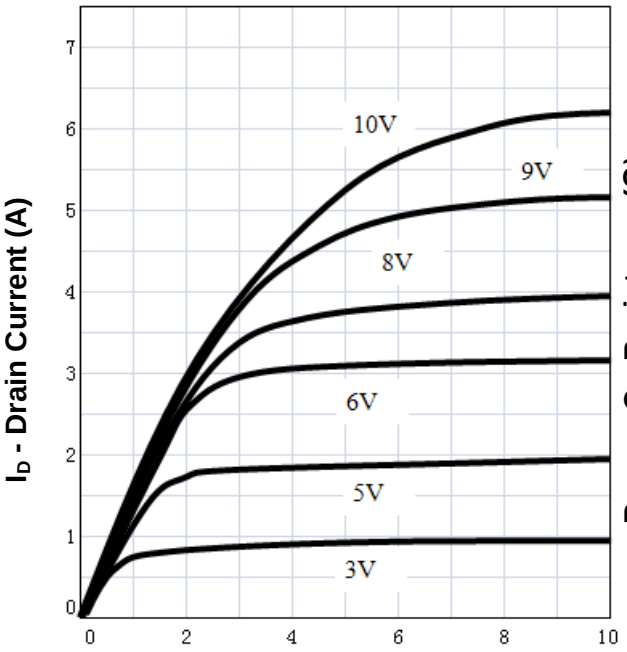

I_D - Drain Current (A)

V_{DS} - Drain-Source Voltage (V)

Drain-Source On Resistance

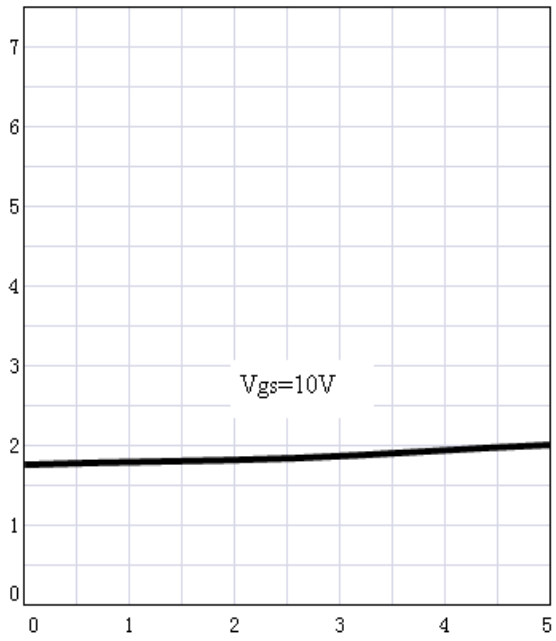

$R_{DS(ON)}$ - On Resistance (Ω)

I_D - Drain Current (A)

Drain-Source On Resistance

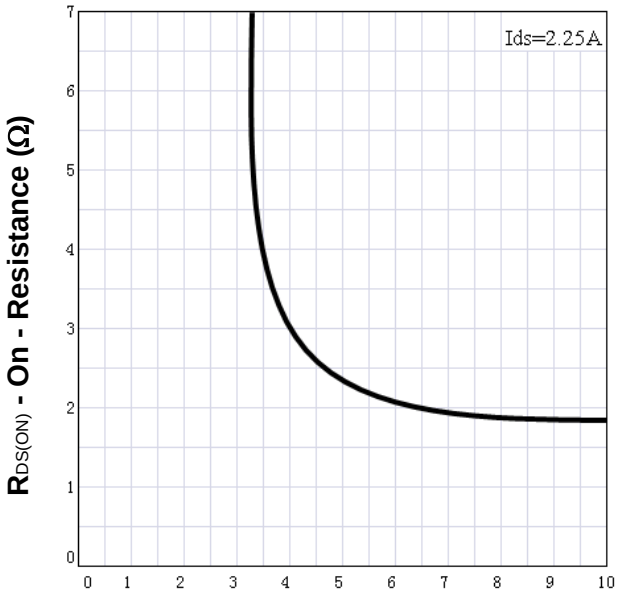

$R_{DS(ON)}$ - On - Resistance (Ω)

V_{GS} - Gate-Source Voltage (V)

Gate Threshold Voltage

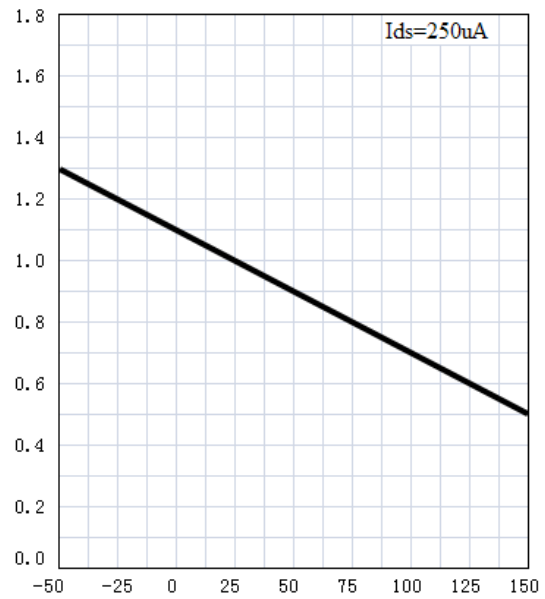

Normalized Threshold Voltage

T_j - Junction Temperature (°C)

Typical Characteristics

Drain-Source On Resistance

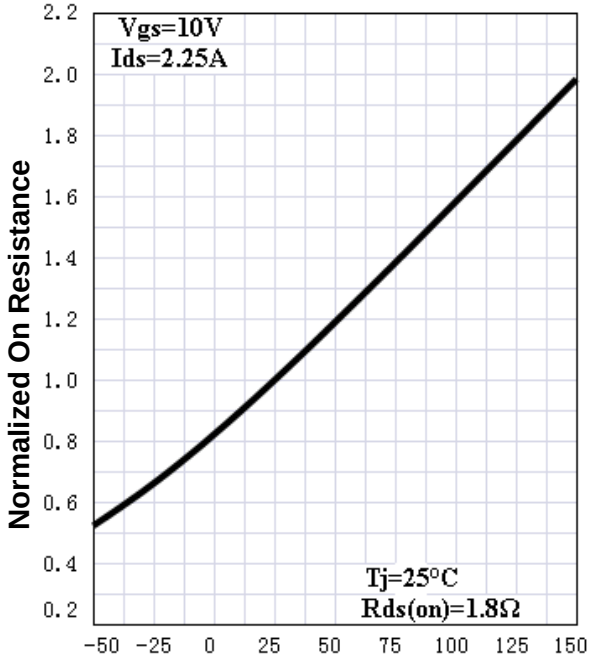

T_j - Junction Temperature (°C)

Source-Drain Diode Forward

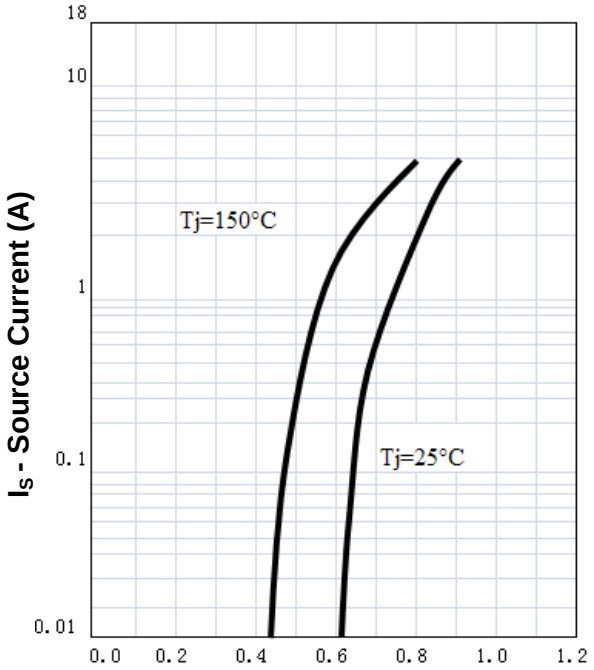

V_{SD} - Source-Drain Voltage (V)

Capacitance

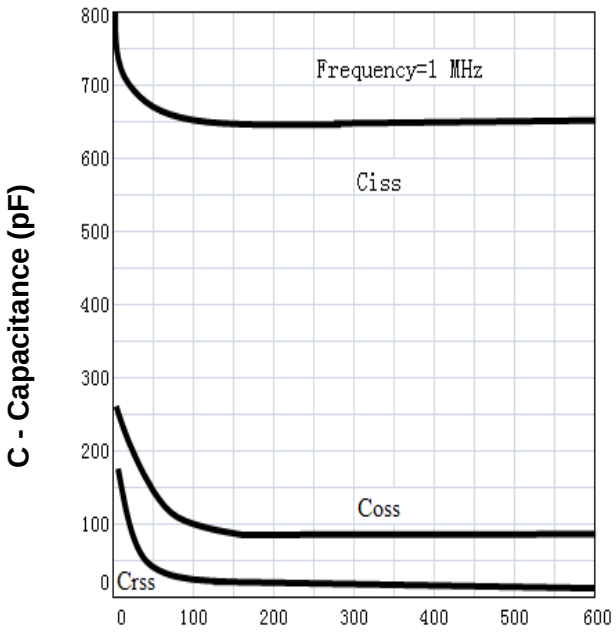

V_{DS} - Drain-Source Voltage (V)

Gate Charge

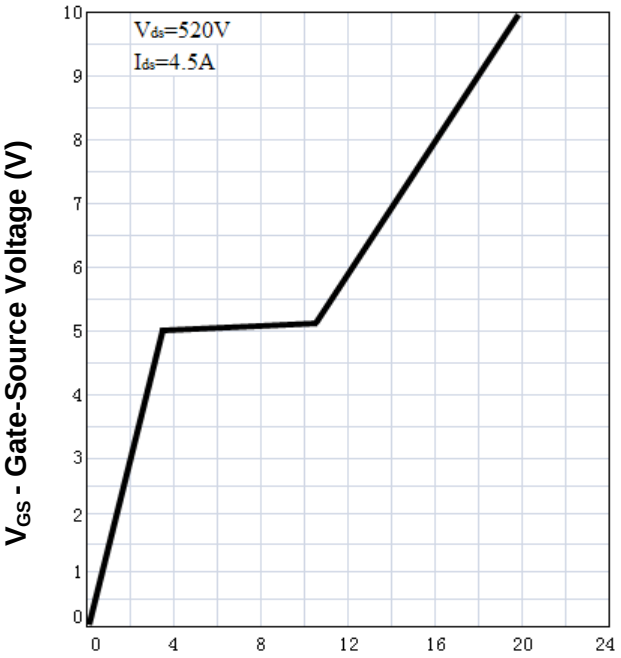

Q_G - Gate Charge (nC)

Avalanche Test Circuit and Waveforms

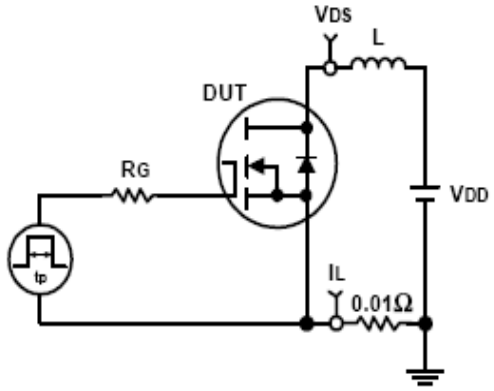

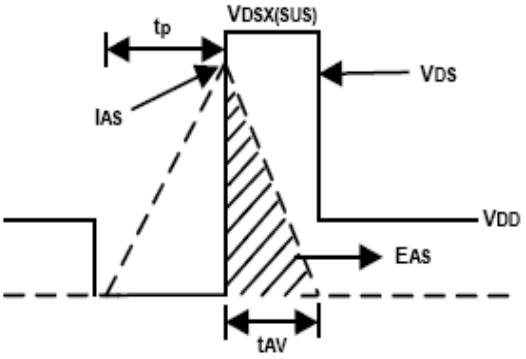

Switching Time Test Circuit and Waveforms

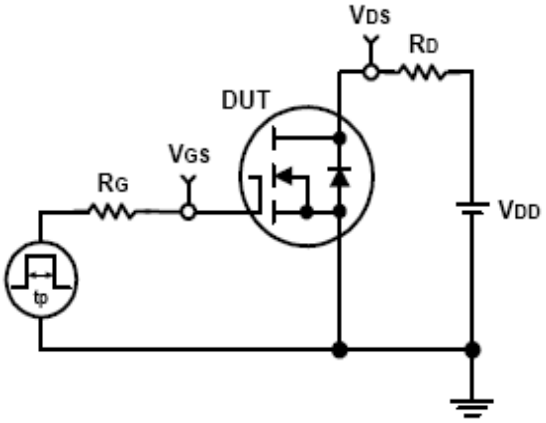

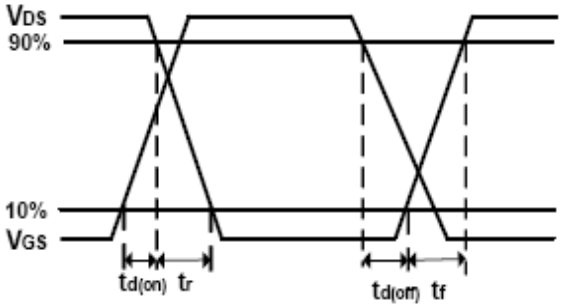

Ordering and Marking Information

Device	Marking	Package	Packaging	Quantity	Reel Size	Tape width
RU6Z5R	RU6Z5R	TO-220	Tube	50	-	-

Package Information

TO-220FB-3L

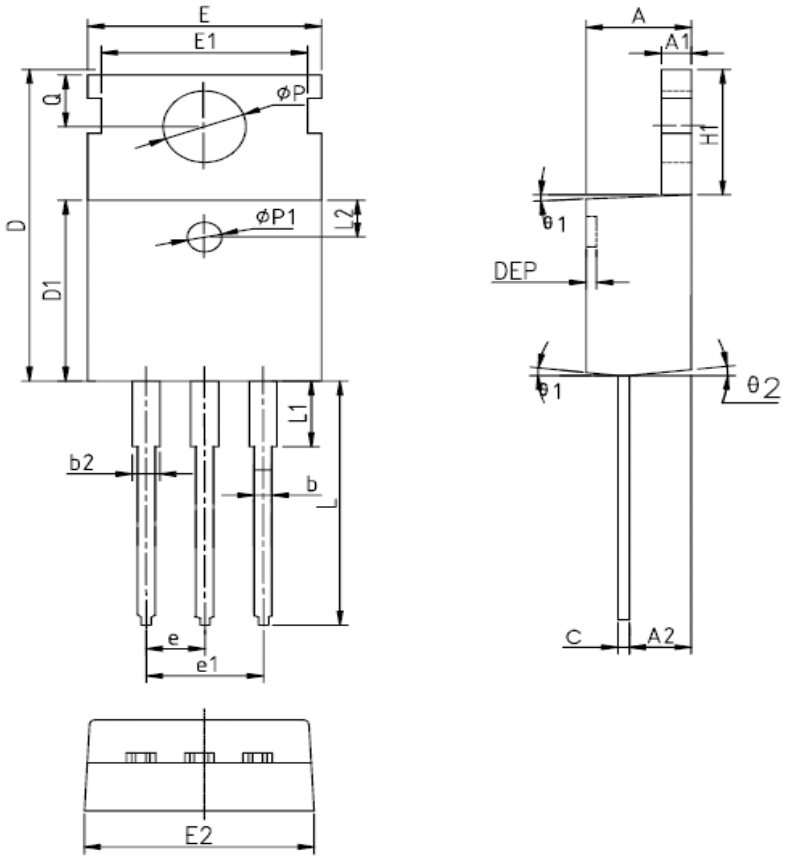

SYMBOL	MM			INCH			SYMBOL	MM			INCH		
	MIN	NOM	MAX	MIN	NOM	MAX		MIN	NOM	MAX	MIN	NOM	MAX
A	4.40	4.57	4.70	0.173	0.180	0.185	Øp1	1.40	1.50	1.60	0.055	0.059	0.063
A1	1.27	1.30	1.33	0.050	0.051	0.052	e	2.54BSC			0.1BSC		
A2	2.35	2.40	2.50	0.093	0.094	0.098	e1	5.08BSC			0.2BSC		
b	0.77	-	0.90	0.030	-	0.035	H1	6.40	6.50	6.60	0.252	0.256	0.260
b2	1.23	-	1.36	0.048	-	0.054	L	12.75	-	13.17	0.502	-	0.519
C	0.48	0.50	0.52	0.019	0.020	0.021	L1	-	-	3.95	-	-	0.156
D	15.40	15.60	15.80	0.606	0.614	0.622	L2	2.50REF.			0.098REF.		
D1	9.00	9.10	9.20	0.354	0.358	0.362	Øp	3.57	3.60	3.63	0.141	0.142	0.143
DEP	0.05	0.10	0.20	0.002	0.004	0.008	Q	2.73	2.80	2.87	0.107	0.110	0.113
E	9.70	9.90	10.10	0.382	0.389	0.398	θ1	5°	7°	9°	5°	7°	9°
E1	-	8.70	-	-	0.343	-	θ2	1°	3°	5°	1°	3°	5°
E2	9.80	10.00	10.20	0.386	0.394	0.401							

ALL DIMENSIONS REFER TO JEDEC STANDARD
DO NOT INCLUDE MOLD FLASH OR PROTRUSIONS

Copyright© Ruichips Semiconductor Co., Ltd

Customer Service

Worldwide Sales and Service:
Sales@ruichips.com

Technical Support:
Technical@ruichips.com

Investor Relations Contacts:
Investor@ruichips.com

Marcom Contact:
Marcom@ruichips.com

Editorial Contact:
Editorial@ruichips.com

HR Contact:
HR@ruichips.com

Legal Contact:
Legal@ruichips.com

Shen Zhen RUICHIPS Semiconductor CO., LTD
Room 501, the 5floor An Tong Industrial Building,
NO.207 Mei Hua Road Fu Tian Area Shen Zhen City, CHINA

TEL: (86-755) 8311-5334
FAX: (86-755) 8311-4278
E-mail: Sales-SZ@ruichips.com