RU30120M

N-Channel Advanced Power MOSFET

Features

- 30V/120A,
  $R_{DS(ON)}$ =2mΩ(tpy.)@V_{GS}=10V
  $R_{DS(ON)}$ =2.9mΩ(tpy.)@V_{GS}=4.5V
- Super High Dense Cell Design
- Reliable and Rugged
- 100% avalanche tested
- Lead Free and Green Devices Available (RoHS Compliant)

Pin Description

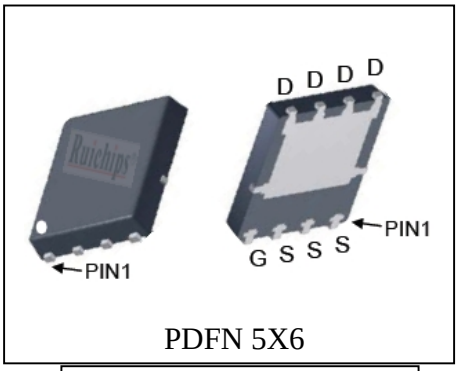

PDFN 5X6

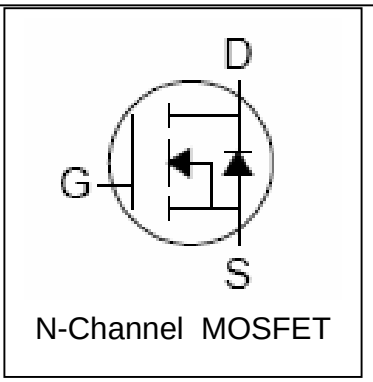

N-Channel MOSFET

Applications

- DC/DC Conversion
- Switching Application

Absolute Maximum Ratings

Symbol	Parameter		Rating	Unit
Common Ratings (T_C=25°C Unless Otherwise Noted)				
V_{DSS}	Drain-Source Voltage		30	V
V_{GSS}	Gate-Source Voltage		±20	
T_J	Maximum Junction Temperature		150	°C
T_{STG}	Storage Temperature Range		-55 to 150	°C
I_S	Diode Continuous Forward Current	T_C=25°C	50①	A
Mounted on Large Heat Sink				
I_{DP}	300μs Pulse Drain Current Tested	T_C=25°C	410②	A
I_D	Continuous Drain Current(V_{GS}=10V)	T_C=25°C	120①	A
		T_C=100°C	97①	
		T_A=25°C	30③	
		T_A=70°C	24③	
P_D	Maximum Power Dissipation	T_C=25°C	96	W
		T_C=100°C	38	
		T_A=25°C	4.2③	
		T_A=70°C	2.7③	

Copyright© Ruichips Semiconductor Co., Ltd

Mounted on Large Heat Sink			
$R_{\theta JC}$	Thermal Resistance-Junction to Case	1.3	°C/W
$R_{\theta JA}$ ③	Thermal Resistance-Junction to Ambient	30	°C/W
Drain-Source Avalanche Ratings			
E_{AS} ④	Avalanche Energy, Single Pulsed	225	mJ

Electrical Characteristics (T_C=25°C Unless Otherwise Noted)

Symbol	Parameter	Test Condition	RU30120M			Unit
			Min.	Typ.	Max.	
Static Characteristics						
BV_{DSS}	Drain-Source Breakdown Voltage	V_{GS}=0V, I_{DS}=250μA	30			V
I_{DSS}	Zero Gate Voltage Drain Current	V_{DS}=30V, V_{GS}=0V			1	μA
		T_J=85°C			30	
$V_{GS(th)}$	Gate Threshold Voltage	V_{DS}=V_{GS}, I_{DS}=250μA	1	2	3	V
I_{GSS}	Gate Leakage Current	V_{GS}=±20V, V_{DS}=0V			±100	nA
$R_{DS(ON)}$ ⑤	Drain-Source On-state Resistance	V_{GS}=10V, I_{DS}=20A		2	3	mΩ
		V_{GS}=4.5V, I_{DS}=20A		2.9	4	mΩ
Diode Characteristics						
V_{SD} ⑤	Diode Forward Voltage	I_{SD}=20A, V_{GS}=0V			1.2	V
t_{rr}	Reverse Recovery Time	I_{SD}=20A, dI_{SD}/dt=100A/μs		32		ns
Q_{rr}	Reverse Recovery Charge			70		nC
Dynamic Characteristics ⑥						
R_G	Gate Resistance	V_{GS}=0V,V_{DS}=0V,F=1MHz		1.8		Ω
C_{iss}	Input Capacitance	V_{GS}=0V, V_{DS}=15V, Frequency=1.0MHz		3170		pF
C_{oss}	Output Capacitance			480		
C_{rss}	Reverse Transfer Capacitance			265		
$t_{d(ON)}$	Turn-on Delay Time	V_{DD}=15V, R_L=0.75Ω, I_{DS}=20A, V_{GEN}=10V, R_G=3Ω		27		ns
t_r	Turn-on Rise Time			92		
$t_{d(OFF)}$	Turn-off Delay Time			67		
t_f	Turn-off Fall Time			37		
Gate Charge Characteristics ⑥						
Q_g	Total Gate Charge	V_{DS}=24V, V_{GS}=10V, I_{DS}=20A		65		nC
Q_{gs}	Gate-Source Charge			14		
Q_{gd}	Gate-Drain Charge			22		

Copyright© Ruichips Semiconductor Co., Ltd

Notes: ① Max current is limited to 50A by the package.
② Pulse width limited by safe operating area.
③ When mounted on 1 inch square copper board, t ≤10sec.
④ Limited by T_{Jmax}, I_{AS} =30A, V_{DD} =24V, R_G = 50Ω , Starting T_J = 25°C.
⑤ Pulse test ; Pulse width≤300μs, duty cycle≤2%.
⑥ Guaranteed by design, not subject to production testing.

Ordering and Marking Information

Device	Marking	Package	Packaging	Quantity	Reel Size	Tape width
RU30120M	RU30120M	PDFN 5X6	Tape&Reel	3000	13''	12mm

Typical Characteristics

Power Dissipation

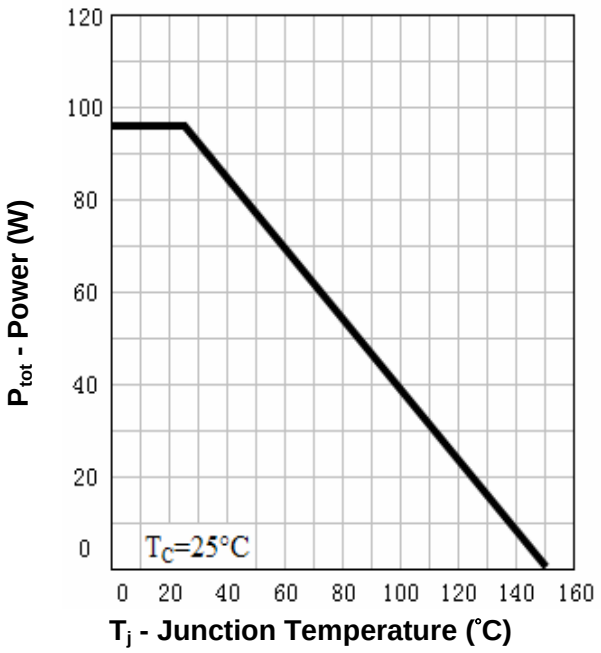

Drain Current

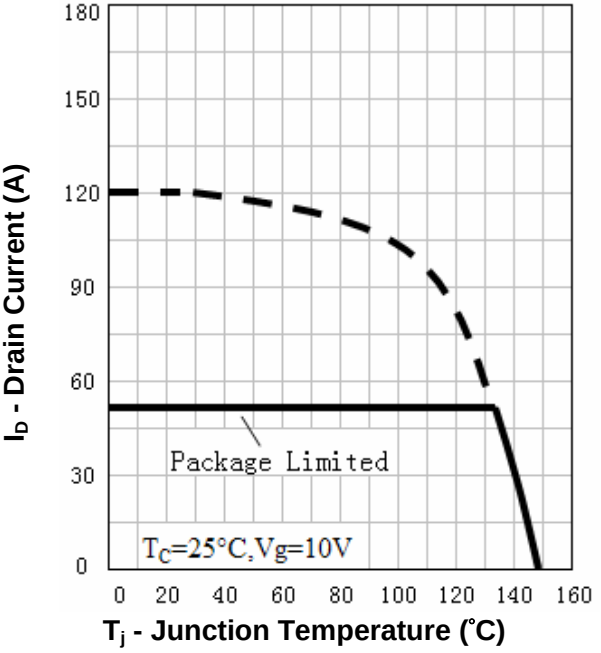

Safe Operation Area

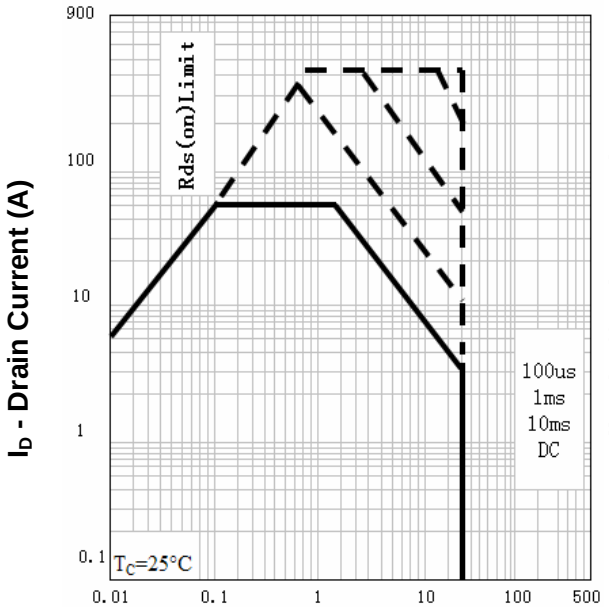

Thermal Transient Impedance

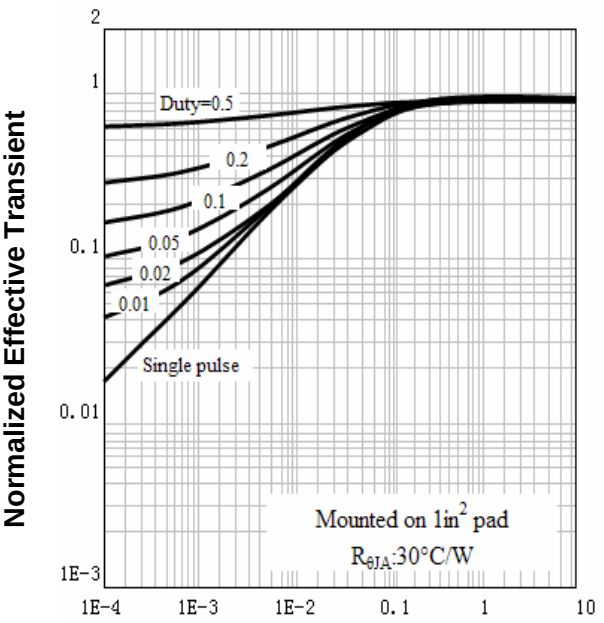

Typical Characteristics

Output Characteristics

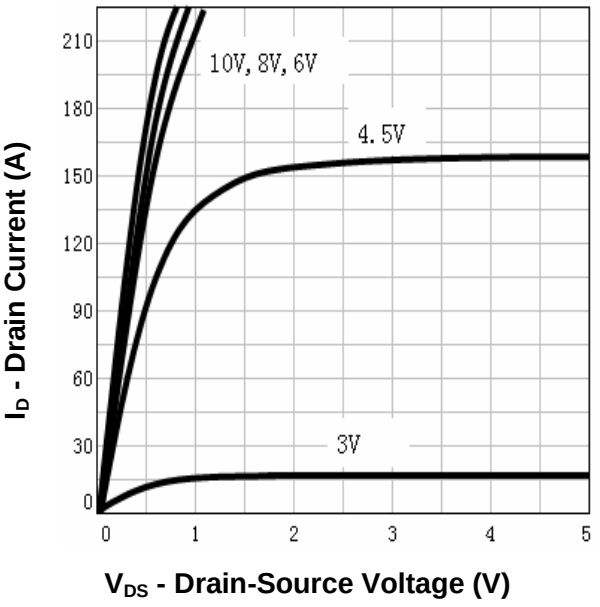

Drain-Source On Resistance

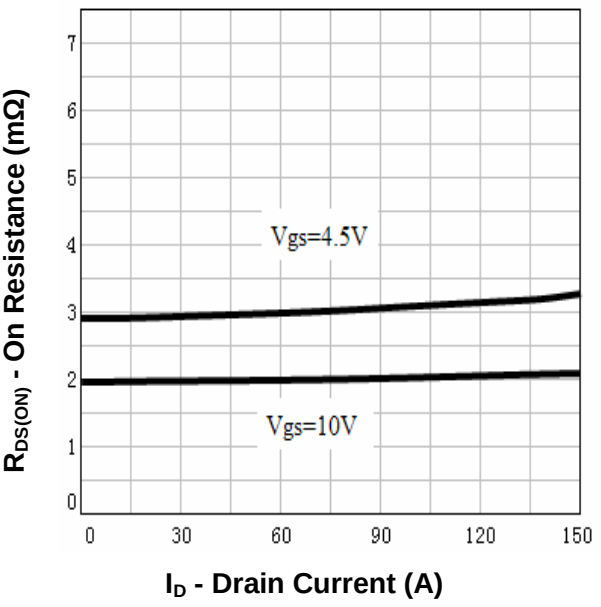

Drain-Source On Resistance

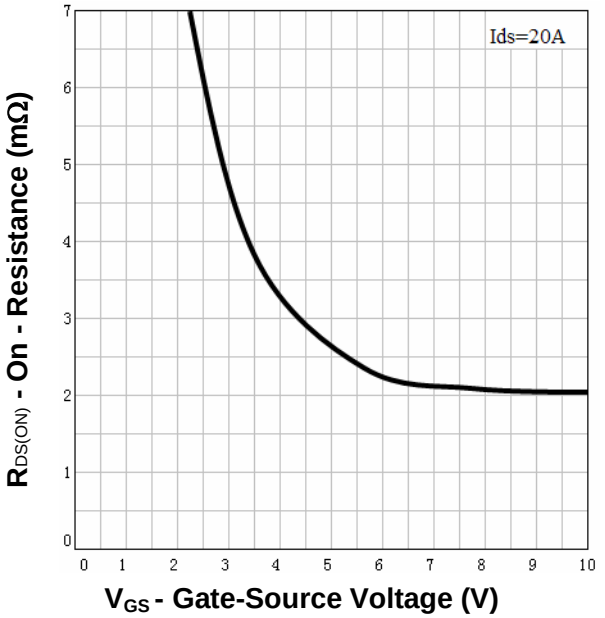

Gate Threshold Voltage

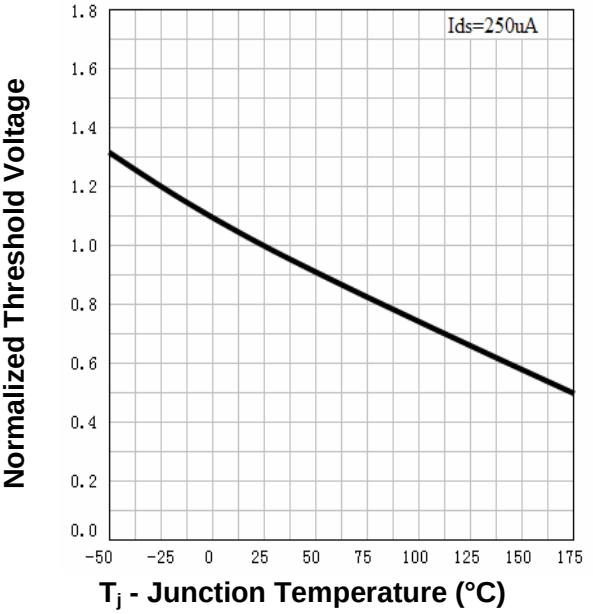

Copyright© Ruichips Semiconductor Co., Ltd

Typical Characteristics

Drain-Source On Resistance

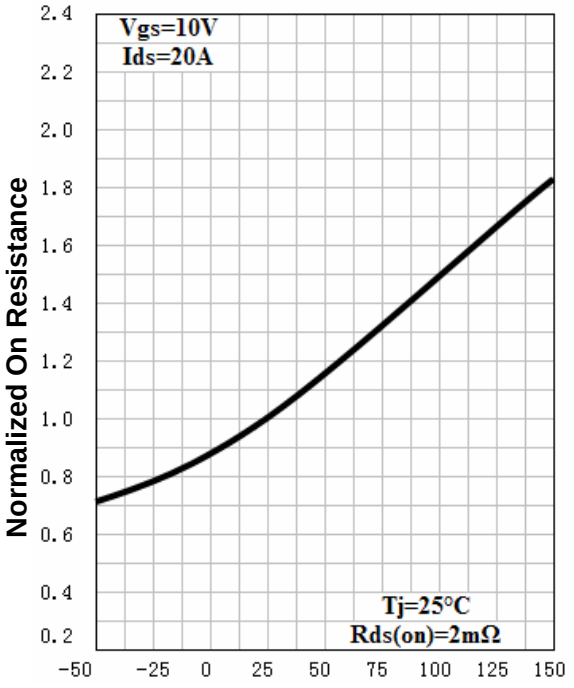

T_j - Junction Temperature (°C)

Source-Drain Diode Forward

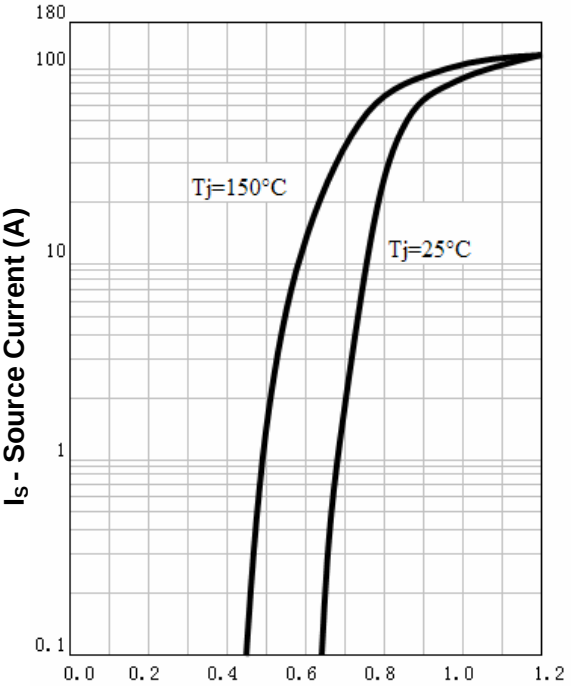

V_{SD} - Source-Drain Voltage (V)

Capacitance

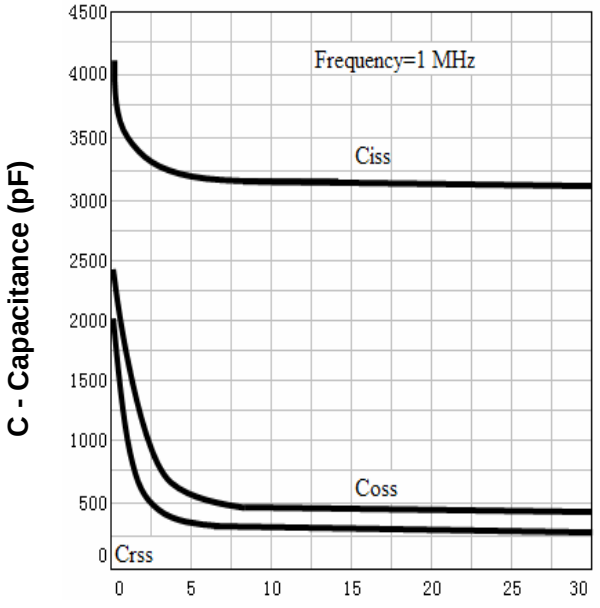

V_{DS} - Drain-Source Voltage (V)

Gate Charge

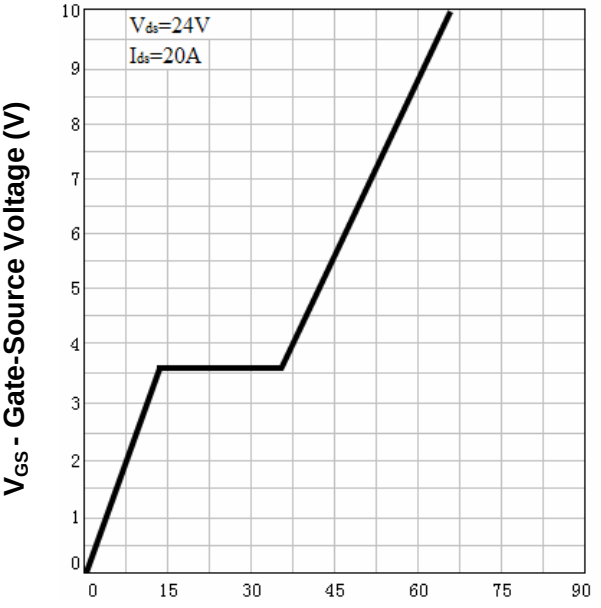

Q_G - Gate Charge (nC)

Avalanche Test Circuit and Waveforms

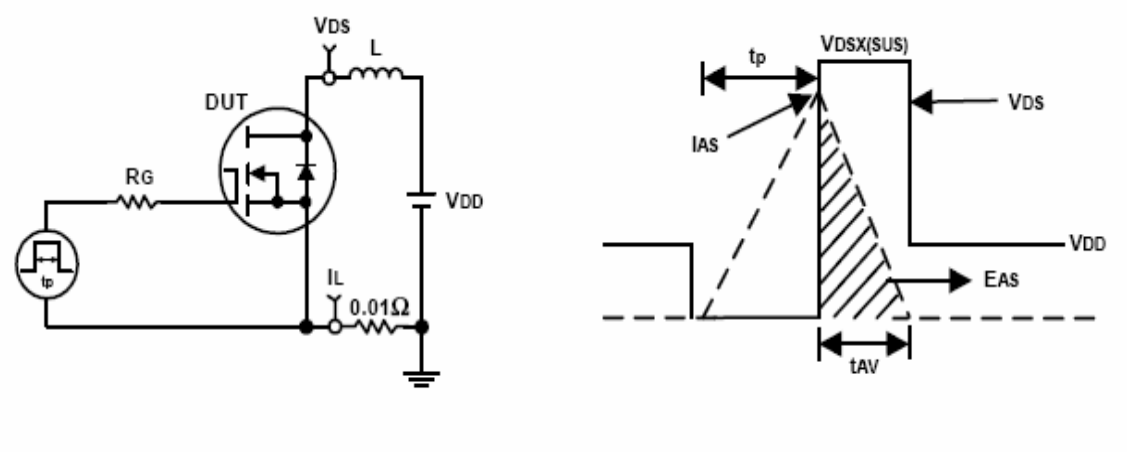

Switching Time Test Circuit and Waveforms

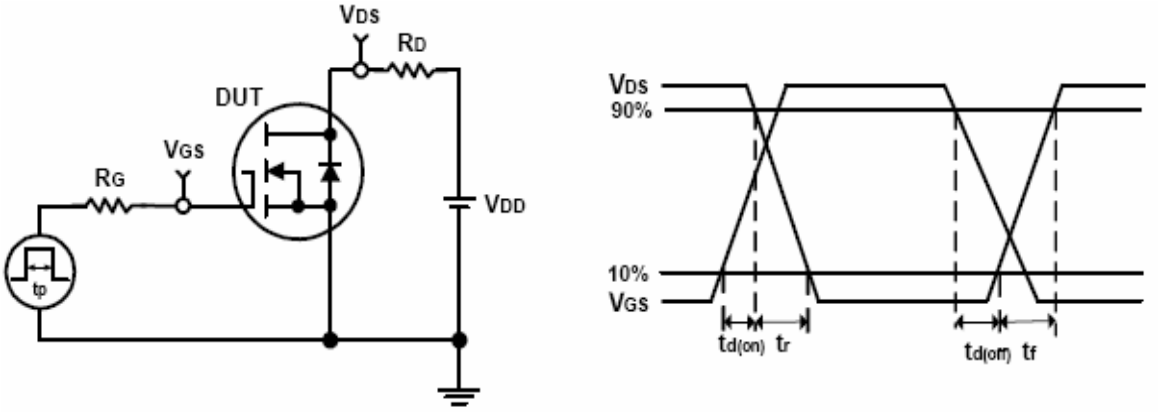

Package Information

PDFN 5X6

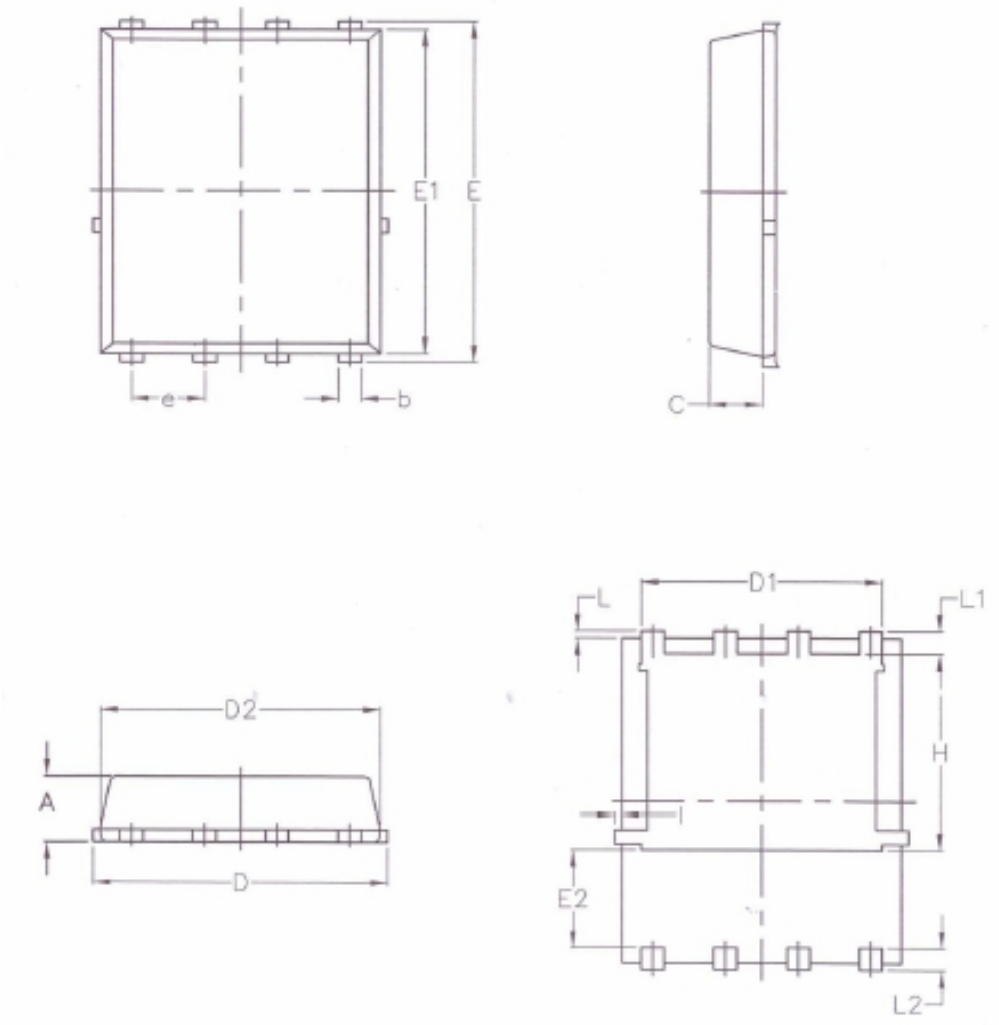

SYMBOL	MM		INCH		SYMBOL	MM		INCH	
	MIN	MAX	MIN	MAX		MIN	MAX	MIN	MAX
A	1.030	1.170	0.040	0.046	E2	1.600	-	0.063	-
b	0.340	0.480	0.013	0.019	e	1.270 BSC		0.050 BSC	
C	0.824	0.970	0.032	0.038	L	0.050	0.250	0.002	0.010
D	4.800	5.400	0.189	0.213	L1	0.380	0.500	0.015	0.020
D1	4.110	4.310	0.162	0.170	L2	0.380	0.500	0.015	0.020
D2	4.800	5.000	0.189	0.197	H	3.500	3.700	0.138	0.146
E	5.950	6.150	0.234	0.242	I	-	0.180	-	0.007
E1	5.650	5.850	0.222	0.230					

ALL DIMENSIONS REFER TO JEDEC STANDARD
DO NOT INCLUDE MOLD FLASH OR PROTRUSIONS

Copyright© Ruichips Semiconductor Co., Ltd

Customer Service

Worldwide Sales and Service:
Sales@ruichips.com

Technical Support:
Technical@ruichips.com

Investor Relations Contacts:
Investor@ruichips.com

Marcom Contact:
Marcom@ruichips.com

Editorial Contact:
Editorial@ruichips.com

HR Contact:
HR@ruichips.com

Legal Contact:
Legal@ruichips.com

Shen Zhen RUICHIPS Semiconductor CO., LTD
Room 501, the 5floor An Tong Industrial Building,
NO.207 Mei Hua Road Fu Tian Area Shen Zhen City, CHINA

TEL: (86-755) 8311-5334
FAX: (86-755) 8311-4278
E-mail: Sales-SZ@ruichips.com