2A, 6.5V, Ultra Low Noise, Ultra Low Dropout Linear Regulator

General Description

The RTQ2532W is a high-current (2A), low-noise (6.8μV_{RMS}), high accuracy (1% over line, load, and temperature), low-dropout linear regulator (LDO) capable of sourcing 2A with extremely low dropout (max. 125mV). The device output voltage is pin-selectable (up to 3.95V) using a PCB layout without the need of external resistors, thus reducing overall component count. Designers can achieve higher output voltage with the use of external resistor divider. The device supports single input supply voltage as low to 1.1V that makes it easy to use.

The low noise, high PSRR and high output current capability makes the RTQ2532W ideal to power noise-sensitive devices such as analog-to-digital converters (ADCs), digital-to-analog converters (DACs), and RF components. With very high accuracy, remote sensing, and soft-start capabilities to reduce inrush current, the RTQ2532W is ideal for powering digital loads such as FPGAs, DSPs, and ASICs.

The external enable control and power good indicator function makes the control sequence easier. The output noise immunity is enhanced by adding external bypass capacitor on the NR/SS pin. The device is fully specified over the temperature range of T_J = –40°C to 125°C and is offered in a VQFN-20L 5x5 package.

Ordering Information

RTQ2532W□□□

- Pin 1 Orientation***
  (2) : Quadrant 2, Follow EIA-481-D
- Package Type
  QV : VQFN-20L 5x5 (V-Type)
- Lead Plating System
  G : Green (Halogen Free and Pb Free)

Note :

***Empty means Pin1 orientation is Quadrant 1

Richtek products are :

- RoHS compliant and compatible with the current requirements of IPC/JEDEC J-STD-020.
- Suitable for use in SnPb or Pb-free soldering processes.

Features

- **Input Voltage Range : 1.1V to 6.5V**
- **Two Output Voltage Modes**
  - **0.8 V to 5.5V (Set by a Resistive Divider)**
  - **0.8 V to 3.95V (Set via PCB Layout, No External Resistor Required)**
- **Accurate Output Voltage Accuracy (1%) Over Line, Load and Temperature**
- **Ultra High PSRR : 40dB at 500kHz**
- **Excellent Noise Immunity**
  - **6.8μV_{RMS} at 0.8V Output**
  - **10μV_{RMS} at 3.3V Output**
- **Ultra Low Dropout Voltage : 125mV at 2A**
- **Enable Control**
- **Programmable Soft-Start Output**
- **Stable with a 22µF or Larger Ceramic Output Capacitor**
- **Support Power-Good Indicator Function**
- **RoHS Compliant and Halogen Free**

Applications

- Portable Electronic Devices
- Wireless Infrastructures : SerDes, FPGA, DSP
- RF, IF Components : VCO, ADC, DAC, LVDS

Pin Configuration

(TOP VIEW)

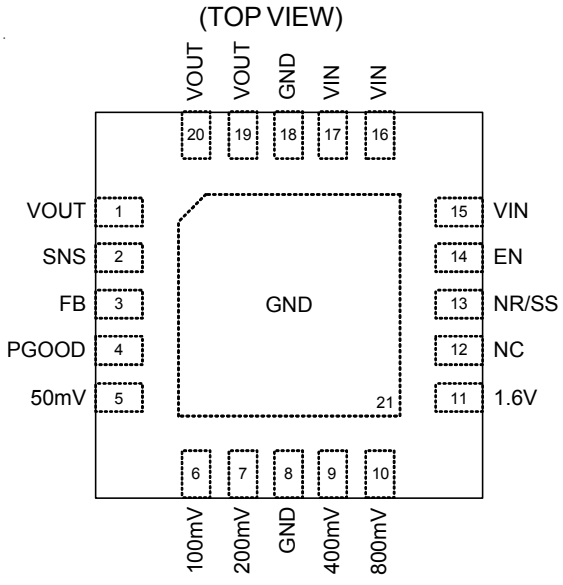

VQFN-20L 5x5

Copyright ©2019 Richtek Technology Corporation. All rights reserved. RICHTEK is a registered trademark of Richtek Technology Corporation.

Marking Information



RTQ2532WGQV : Product Number

YMDNN : Date Code

Functional Pin Description

Pin No.	Pin Name	Pin Function
1, 19, 20	VOUT	LDO output pins. A 22μF or larger ceramic capacitor (10μF or greater effective capacitance) is required for stability. Place the output capacitor as close to the device as possible and minimize the impedance between VOUT pin and load.
2	SNS	Output voltage sense input pin. Connect this pin only if using the configuration without external resistors. Keep the SNS pin floating if the VOUT voltage is set by external resistor.
3	FB	Feedback voltage input. This pin is used to set the desired output voltage via an external resistive divider. The feedback reference voltage is 0.8V typically.
4	PGOOD	Power good indicator output. An open-drain output and active high when the output voltage reaches 88% of the target. The pin is pulled to ground when the output voltage is lower than its specified thresholds, including EN shutdown, OCP and OTP.
5, 6, 7, 9, 10, 11	50mV, 100mV, 200mV, 400mV, 800mV, 1.6V	Output voltage setting pins. Connect these pins to ground or leave floating. Connecting these pins to ground increases the output voltage by the value of the pin name; multiple pins can be simultaneously connected to GND to select the desired output voltage. Leave these pins floating (open) if the VOUT voltage is set by external resistor.
8, 18, 21 (Exposed Pad)	GND	Ground. The exposed pad must be soldered to a large PCB and connected to GND for maximum power dissipation.
12	NC	No internal connection. Leaving these pins floating does not affect the functionality of the chip. By connecting these pins to GND, design engineers could extend the GND copper coverage on the PCB top layer to enhance the thermal convection.
13	NR/SS	Noise-reduction and soft-start pin. Decouple this pin to GND with an external capacitor $C_{NR/SS}$ can not only reduce output noise to very low levels but also slow down the rising of VOUT, providing a soft-start behavior. For low noise applications, a 10nF to 1μF $C_{NR/SS}$ is suggested.
14	EN	Enable control input. Connecting this pin to logic-high enables the regulator, and driving this pin low puts it into shutdown mode. The device can have V_{IN} and V_{EN} sequenced in any order without causing damage to the device. However, to ensure the soft-start function works as intended, certain sequencing rules must be applied. Enabling the device after V_{IN} is present is preferred.
15, 16, 17	VIN	Supply input. A general 22μF ceramic capacitor should be placed as close as possible to this pin for better noise rejection.

Copyright ©2019 Richtek Technology Corporation. All rights reserved. RICHTEK is a registered trademark of Richtek Technology Corporation.

Functional Block Diagram

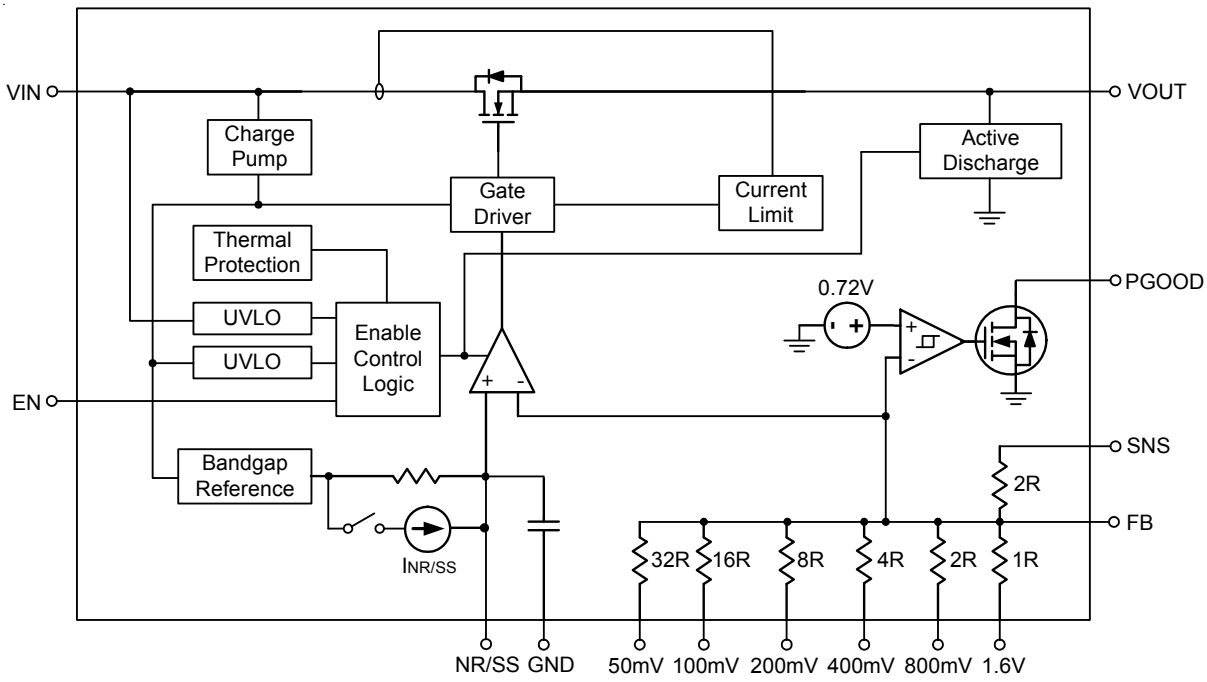

Operation

The RTQ2532W operates with single supply input ranging from 1.1V to 6.5V and is capable of delivering up to 2A current to the output. The device features high PSRR and low noise to provide a clean supply to the application.

A low-noise reference and error amplifier are included to reduce device noise. The NR/SS capacitor filters the noise from the reference, and the feed-forward capacitor filters the noise from the error amplifier. The high power-supply rejection ratio (PSRR) of the RTQ2532W minimizes the coupling of input supply noise to the output.

Enable and Shutdown

The RTQ2532W provides an EN pin, as an external chip enable control, to enable or disable the device. V_{EN} below 0.5 V turns the regulator off and enters the shutdown mode, while V_{EN} above 1.1V turns the regulator on. When the regulator is shutdown, the ground current is reduced to a maximum of 25μA. The enable circuitry has hysteresis (typically 50mV) for use with relatively slowly ramping analog signals.

If not used, connect the EN pin as close as possible to the largest capacitance on the input to prevent voltage droops on the VIN line from triggering the enable circuit.

VOUT Programming Pins

The built-in matched feedback resistor network of the RTQ2532W can set the output voltage. The output voltage can be programmed from 0.8V to 3.95V in 50mV steps when tying these programming pins (Pins 5 to 11) to ground. Tying any of the VOUT programming pins to SNS can lower the value of the upper resistor divider. Hence, the VOUT programming resolution is increased.

Programmable Soft-Start

The noise-reduction capacitor ($C_{NR/SS}$) reduces noise and programs the soft-start ramp time during turn-on. When EN and UVLO exceed the respective threshold voltage, the RTQ2532W activates a quick-start circuit to charge the noise reduction capacitor ($C_{NR/SS}$) and then the output voltage ramps up.

Copyright ©2019 Richtek Technology Corporation. All rights reserved. RICHTEK is a registered trademark of Richtek Technology Corporation.

Power Good

The power-good circuit monitors the feedback pin voltage to indicate the status of the output voltage. The open-drain PGOOD pin requires an external pull-up resistor to an external supply, and any downstream device can receive power-good as a logic signal that can be used for sequencing. A pull-up resistor from 10kΩ to 100kΩ is recommended. Make sure that the external pull-up supply voltage results in a valid logic signal for the receiving device or devices.

After start-up, the PGOOD pin becomes high impedance when the feedback voltage exceeds V_{PGOOD_HYS} (typically 90% of 0.8V reference voltage level). The PGOOD is pulled to GND when the feedback pin voltage falls below the V_{IT_PGOOD}, when EN is low, or the current limit or OTP levels are reached.

Under-Voltage Lockout (UVLO)

The UVLO circuit monitors the input voltage to prevent the device from turning on before VIN rises above the V_{UVLO} threshold. The UVLO circuit also disables the output of the device when VIN falls below the lockout voltage ($V_{UVLO} - \Delta V_{UVLO}$). The UVLO circuit responds quickly to glitches on VIN and attempts to disable the output of the device if VIN collapses.

Internal Current Limit (I_{LIM})

The RTQ2532W continuously monitors the output current to protect the device against high load current faults or short events. The current limit circuitry is not intended to allow operation above the rated current of the device. Continuously running the RTQ2532W above the rated current degrades the reliability of the device.

During current limit, the output voltage falls when load impedance decreases. If the output voltage is low, excessive power may cause the output thermal shutdown.

A foldback feature limits the short-circuit current to protect the regulator from damage under all load conditions. If the load current demand exceeds the foldback current limit before EN goes high, the device does not turn on.

Over-Temperature Protection (OTP)

The RTQ2532W implements thermal shutdown protection. The device is disabled when the junction temperature (T_J) exceeds 160°C (typical). The LDO automatically turns on again when the temperature falls below 140°C (typical).

For reliable operation, limit the junction temperature to a maximum of 125°C. Continuously running the RTQ2532W into thermal shutdown or above a junction temperature of 125°C reduces long-term reliability.

Output Active Discharge

When the device is disabled, the RTQ2532W discharges the LDO output (via VOUT pins) through an internal current sink to ground. Do not rely on the active discharge circuit for discharging a large amount of output capacitance after the input supply collapses because reverse current can possibly flow from the output to the input. External current protection should be added if the device work at reverse voltage state.

Copyright ©2019 Richtek Technology Corporation. All rights reserved. RICHTEK is a registered trademark of Richtek Technology Corporation.

Absolute Maximum Ratings (Note 1)

- VIN, PGOOD, EN ---------- –0.3V to 7V
- VOUT ---------- –0.3V to 7V
- NR/SS, FB ---------- –0.3V to 3.6V
- Power Dissipation, P_D @ T_A = 25°C
  VQFN-20L 5x5 ---------- 2.79W
- Package Thermal Resistance (Note 2)
  VQFN-20L 5x5, θ_{JA} ---------- 35.8°C/W
  VQFN-20L 5x5, θ_{JC} ---------- 4.28°C/W
- Lead Temperature (Soldering, 10 sec.) ---------- 260°C
- Junction Temperature ---------- 150°C
- Storage Temperature Range ---------- –65°C to 150°C
- ESD Susceptibility (Note 3)
  HBM (Human Body Model) ---------- 2kV

Recommended Operating Conditions (Note 4)

- Supply Input Voltage, VIN ---------- 1.1V to 6.5V
- Junction Temperature Range ---------- –40°C to 125°C

Electrical Characteristics

Over operating temperature range (T_J = –40°C to 125°C), (1.1V ≤ V_{IN} < 6.5V and V_{IN} ≥ $V_{OUT(TARGET)}$ + 0.3 V, $V_{OUT(TARGET)}$ = 0.8V, VOUT connected to 50Ω to GND, V_{EN} = 1.1 V, C_{IN} = 10µF, C_{OUT} = 22µF, $C_{NR/SS}$ = 0nF, C_{FF} = 0nF, and PGOOD pin pulled up to V_{IN} with 100 kΩ, unless otherwise noted. (Note 5)

Parameter	Symbol	Test Conditions	Min	Typ	Max	Unit
Operating Input Voltage Range	V_{IN}		1.1	--	6.5	V
Feedback Reference Voltage	V_{REF}		--	0.8	--	V
NR/SS Pin Voltage	$V_{NR/SS}$		--	0.8	---	V
Under-Voltage Lockout	V_{UVLO}	V_{IN} increasing	--	1.02	1.085	V
	ΔV_{UVLO}	Hysteresis	--	100	--	mV
Output Voltage Range		Using voltage setting pins (50mV, 100mV, 200mV, 400mV, 800mV, and 1.6V)	0.8V –1%	--	3.95V + 1%	V
		Using external resistors	0.8V –1%	--	5V + 1%	V
Output Voltage Accuracy (Note 6)	V_{OUT}	V_{IN} = V_{OUT} + 0.3V, 0.8V ≤ V_{OUT} ≤ 5.2V, 1mA ≤ I_{OUT} ≤ 2A	–1	--	1	%
Line Regulation	$\Delta V_{OUT}/\Delta V_{IN}$	I_{OUT} = 1mA, 1.1V ≤ V_{IN} ≤ 6.5 V	--	0.05	--	%/V
Load Regulation	$\Delta V_{OUT}/\Delta I_{OUT}$	1mA ≤ I_{OUT} ≤ 2A	--	0.08	--	%/A

Copyright ©2019 Richtek Technology Corporation. All rights reserved. RICHTEK is a registered trademark of Richtek Technology Corporation.

Parameter	Symbol	Test Conditions		Min	Typ	Max	Unit
Dropout Voltage	V_{DROP}	V_{IN} = 1.1V to 6.5V, I_{OUT} = 2A, V_{FB} = 0.8V – 3%		--	--	125	mV
Output Current Limit	I_{LIM}	V_{OUT} = 90% $V_{OUT(TARGET)}$, V_{IN} = $V_{OUT(TARGET)}$ + 400mV		2.2	3.3	3.8	A
Short-Circuit Current Limit	I_{SC}	R_{LOAD} = 20mΩ, under foldback operation		--	1	--	A
Ground Pin Current	I_{GND}	Minimum load, V_{IN} = 6.5V, I_{OUT} = 5mA		--	2.8	4	mA
		Maximum load, V_{IN} = 1.1V, I_{OUT} = 2A		--	3.7	5.5	
		Shutdown, PGOOD = Open, V_{IN} = 6.5V, V_{EN} = 0.5V		--	--	25	µA
EN Pin Current	I_{EN}	V_{IN} = 6.5V, V_{EN} = 0V and 6.5V		–0.1	--	0.1	µA
EN Pin High-Level Input Voltage	V_{EN_H}	Enable device		1.1	--	6.5	V
EN Pin Low-Level Input Voltage	V_{EN_L}	Disable device		0	--	0.5	
PGOOD Pin Threshold	V_{IT_PGOOD}	For the direction PGOOD signal falling with decreasing V_{OUT}		0.82 x V_{OUT}	0.883 x V_{OUT}	0.93 x V_{OUT}	V
PGOOD Pin Hysteresis	V_{PGOOD_HYS}	For PGOOD signal rising		--	2% x V_{OUT}	--	V
PGOOD Pin Low-Level Output Voltage	V_{PGOOD_L}	V_{OUT} < V_{IT_PGOOD}, I_{PGOOD} = –1mA (current into device)		--	--	0.4	V
PGOOD Pin Leakage Current	I_{PGOOD_LK}	V_{OUT} > V_{IT_PGOOD} , V_{PGOOD} = 6.5V		--	--	1	µA
NR/SS Pin Charging Current	$I_{NR/SS}$	$V_{NR/SS}$ = GND, V_{IN} = 6.5V		4	--	9	µA
FB Pin Leakage Current	I_{FB}	V_{IN} = 6.5V		–100	--	100	nA
Power Supply Rejection Ratio	PSRR	V_{IN} – V_{OUT} = 0.4V, I_{OUT} = 2A, $C_{NR/SS}$ = 100nF, C_{FF} = 10nF, C_{OUT} = 22µF	f = 10kHz, V_{OUT} = 0.8V	--	42	--	dB
			f = 500kHz, V_{OUT} = 0.8V	--	39	--	
			f = 10kHz, V_{OUT} = 5V	--	40	--	
			f = 500kHz, V_{OUT} = 5V	--	25	--	

Copyright ©2019 Richtek Technology Corporation. All rights reserved. RICHTEK is a registered trademark of Richtek Technology Corporation.

Parameter	Symbol	Test Conditions		Min	Typ	Max	Unit
Output Noise Voltage	e_{NO}	BW = 10Hz to 100kHz, I_{OUT} = 2A, $C_{NR/SS}$ = 100nF, C_{FF} = 10nF, C_{OUT} = 22µF	V_{IN} = 1.1V, V_{OUT} = 0.8V	--	6.8	--	μV_{RMS}
			V_{IN} = 3.6V, V_{OUT} = 3.3V	--	10	--	
			V_{OUT} = 5 V	--	16	--	
Thermal Shutdown Threshold	T_{SD}	Temperature increasing		--	160	--	°C
		Temperature decreasing		--	140	--	

Note 1. Stresses beyond those listed under "Absolute Maximum Ratings" may cause permanent damage to the device. These are stress ratings only, and functional operation of the device at these or any other conditions beyond those indicated in the operational sections of the specifications is not implied. Exposure to absolute maximum rating conditions may affect device reliability.

Note 2. θ_{JA} is measured under natural convection (still air) at T_A = 25°C on a high effective-thermal-conductivity four-layer test board in size of 70mm x 50mm with 1oz copper thickness. θ_{JC} is measured at the exposed pad of the package.

Note 3. Devices are ESD sensitive. Handling precaution is recommended.

Note 4. The device is not guaranteed to function outside its operating conditions.

Note 5. $V_{OUT(TARGET)}$ is the expected V_{OUT} value set by the external feedback resistors. The 50Ω load is disconnected when the test conditions specify an I_{OUT} value.

Note 6. External resistor tolerance is not taken into account.

Copyright ©2019 Richtek Technology Corporation. All rights reserved. RICHTEK is a registered trademark of Richtek Technology Corporation.

Typical Application Circuit

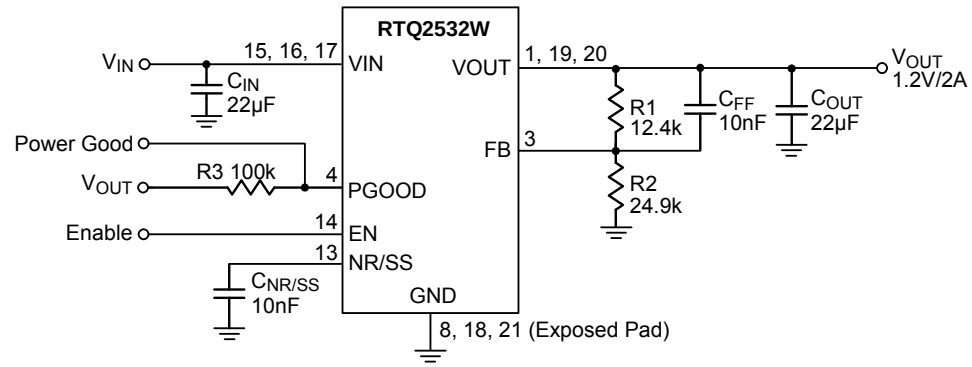

$$V_{OUT} = V_{REF} \times \left(1 + \frac{R1}{R2}\right) = 0.8V \times \left(1 + \frac{12.4k}{24.9k}\right) = 1.2V$$

Figure 1. Configuration Circuit for V_{OUT} Adjusted by a Resistive Divider

Table 1. Recommended Feedback-Resistor Values

Output Voltage (V)	External Restive Divider Combinations	
	R1 (kΩ)	R2 (kΩ)
0.9	12.4	100
1	12.4	49.9
1.2	12.4	24.9
1.5	12.4	14.3
1.8	12.4	10
2.5	12.4	5.9
3.3	11.8	3.74
4.5	11.8	2.55
5	12.4	2.37

Table 2. Recommended External Components

Component	Description	Vendor P/N
C_{FF}, $C_{NR/SS}$	10nF, 50V, X7R, 0603	GCD188R71H103KA01 (Murata)
*C_{OUT}, C_{IN}	22µF, 16V, X5R, 0805	GRM21BR61C226ME44 (Murata)

* : Considering the effective capacitance derated with biased voltage level, the C_{OUT} component needs to satisfy the effective capacitance at least 10µF or above at targeted output level for stable and normal operation.

Copyright ©2019 Richtek Technology Corporation. All rights reserved. RICHTEK is a registered trademark of Richtek Technology Corporation.

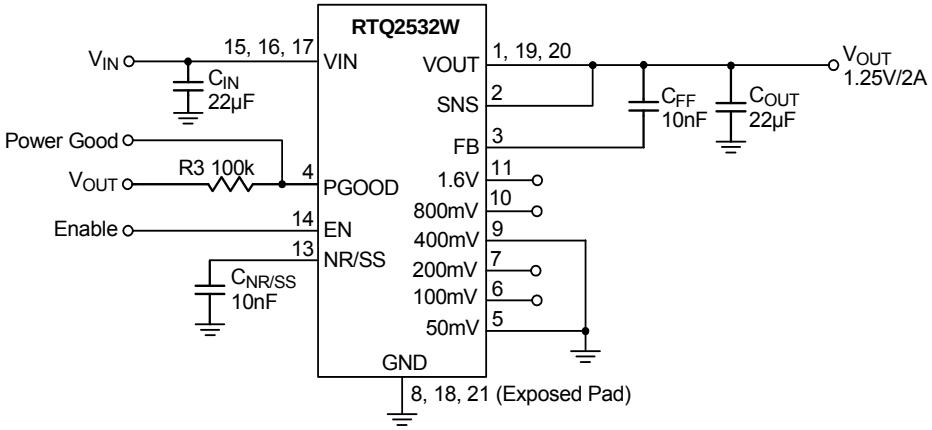

$V_{OUT} = V_{REF} + 50mV + 400mV = 0.8V + 50mV + 400mV = 1.25V$

(Table 3. provides a full list for different V_{OUT} targets and the corresponding pin settings.)

Figure 2. Configuration Circuit for Adjusted V_{OUT} via PCB Layout

Copyright ©2019 Richtek Technology Corporation. All rights reserved. RICHTEK is a registered trademark of Richtek Technology Corporation.

Table 3. V_{OUT} Select Pin Settings for Different Targets

V_{OUT} (V)	50mV	100mV	200mV	400mV	800mV	1.6V	V_{OUT} (V)	50mV	100mV	200mV	400mV	800mV	1.6V
0.8	Open	Open	Open	Open	Open	Open	2.4	Open	Open	Open	Open	Open	GND
0.85	GND	Open	Open	Open	Open	Open	2.45	GND	Open	Open	Open	Open	GND
0.9	Open	GND	Open	Open	Open	Open	2.5	Open	GND	Open	Open	Open	GND
0.95	GND	GND	Open	Open	Open	Open	2.55	GND	GND	Open	Open	Open	GND
1	Open	Open	GND	Open	Open	Open	2.6	Open	Open	GND	Open	Open	GND
1.05	GND	Open	GND	Open	Open	Open	2.65	GND	Open	GND	Open	Open	GND
1.1	Open	GND	GND	Open	Open	Open	2.7	Open	GND	GND	Open	Open	GND
1.15	GND	GND	GND	Open	Open	Open	2.75	GND	GND	GND	Open	Open	GND
1.2	Open	Open	Open	GND	Open	Open	2.8	Open	Open	Open	GND	Open	GND
1.25	GND	Open	Open	GND	Open	Open	2.85	GND	Open	Open	GND	Open	GND
1.3	Open	GND	Open	GND	Open	Open	2.9	Open	GND	Open	GND	Open	GND
1.35	GND	GND	Open	GND	Open	Open	2.95	GND	GND	Open	GND	Open	GND
1.4	Open	Open	GND	GND	Open	Open	3	Open	Open	GND	GND	Open	GND
1.45	GND	Open	GND	GND	Open	Open	3.05	GND	Open	GND	GND	Open	GND
1.5	Open	GND	GND	GND	Open	Open	3.1	Open	GND	GND	GND	Open	GND
1.55	GND	GND	GND	GND	Open	Open	3.15	GND	GND	GND	GND	Open	GND
1.6	Open	Open	Open	Open	GND	Open	3.2	Open	Open	Open	Open	GND	GND
1.65	GND	Open	Open	Open	GND	Open	3.25	GND	Open	Open	Open	GND	GND
1.7	Open	GND	Open	Open	GND	Open	3.3	Open	GND	Open	Open	GND	GND
1.75	GND	GND	Open	Open	GND	Open	3.35	GND	GND	Open	Open	GND	GND
1.8	Open	Open	GND	Open	GND	Open	3.4	Open	Open	GND	Open	GND	GND
1.85	GND	Open	GND	Open	GND	Open	3.45	GND	Open	GND	Open	GND	GND
1.9	Open	GND	GND	Open	GND	Open	3.5	Open	GND	GND	Open	GND	GND
1.95	GND	GND	GND	Open	GND	Open	3.55	GND	GND	GND	Open	GND	GND
2	Open	Open	Open	GND	GND	Open	3.6	Open	Open	Open	GND	GND	GND
2.05	GND	Open	Open	GND	GND	Open	3.65	GND	Open	Open	GND	GND	GND
2.1	Open	GND	Open	GND	GND	Open	3.7	Open	GND	Open	GND	GND	GND
2.15	GND	GND	Open	GND	GND	Open	3.75	GND	GND	Open	GND	GND	GND
2.2	Open	Open	GND	GND	GND	Open	3.8	Open	Open	GND	GND	GND	GND
2.25	GND	Open	GND	GND	GND	Open	3.85	GND	Open	GND	GND	GND	GND
2.3	Open	GND	GND	GND	GND	Open	3.9	Open	GND	GND	GND	GND	GND
2.35	GND	GND	GND	GND	GND	Open	3.95	GND	GND	GND	GND	GND	GND

Copyright ©2019 Richtek Technology Corporation. All rights reserved. RICHTEK is a registered trademark of Richtek Technology Corporation.

Typical Operating Characteristics

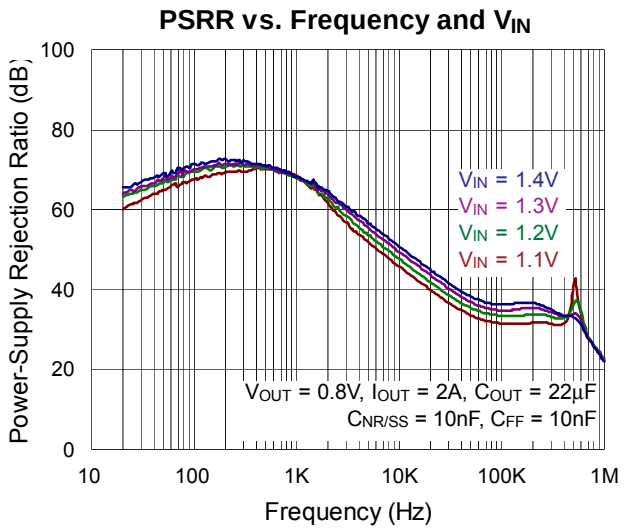

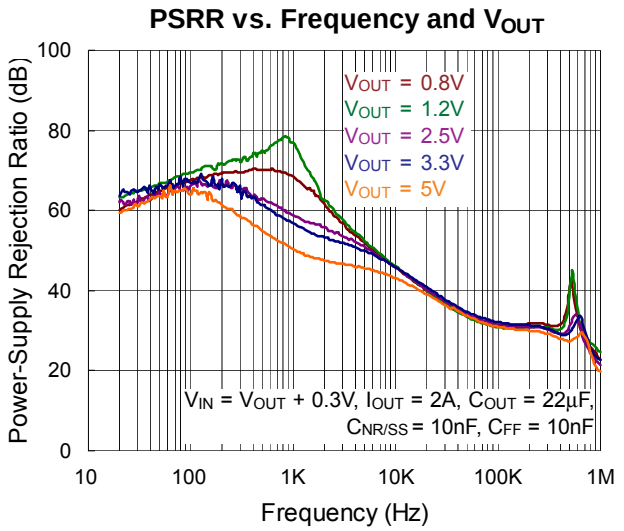

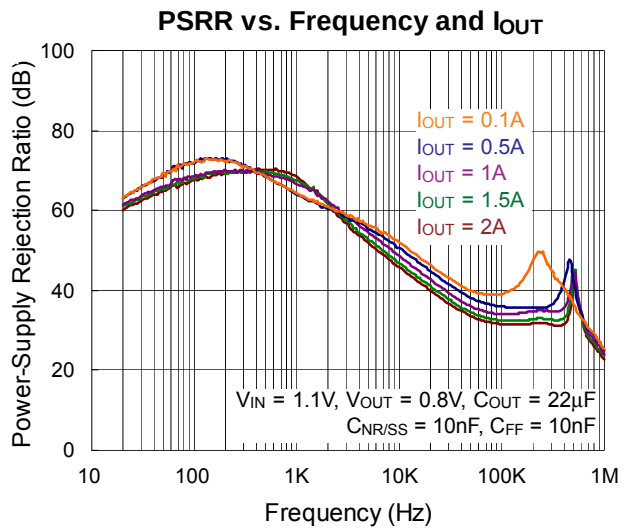

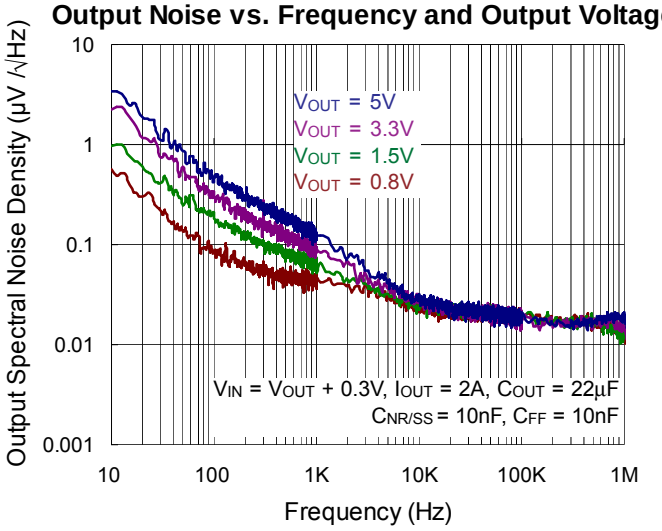

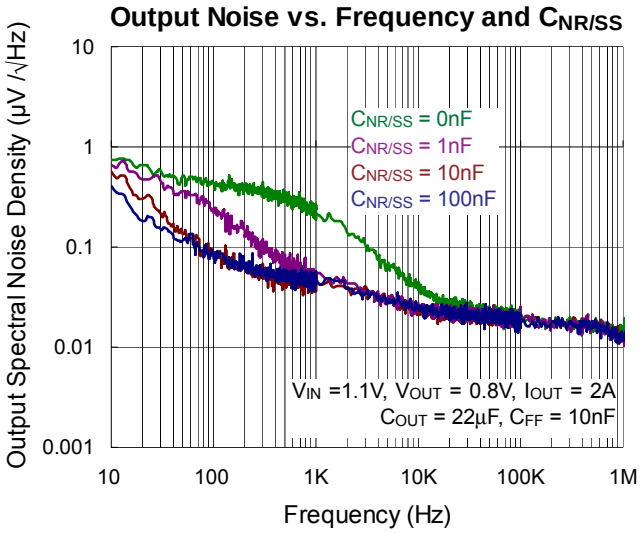

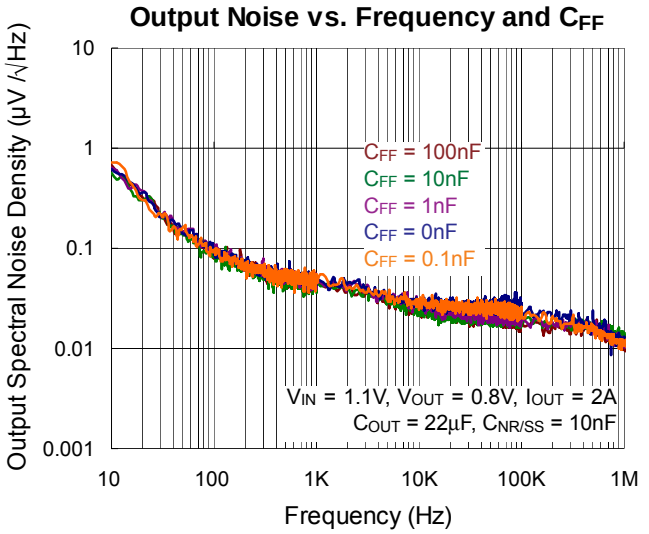

Copyright ©2019 Richtek Technology Corporation. All rights reserved. RICHTEK is a registered trademark of Richtek Technology Corporation.

Power Up Response

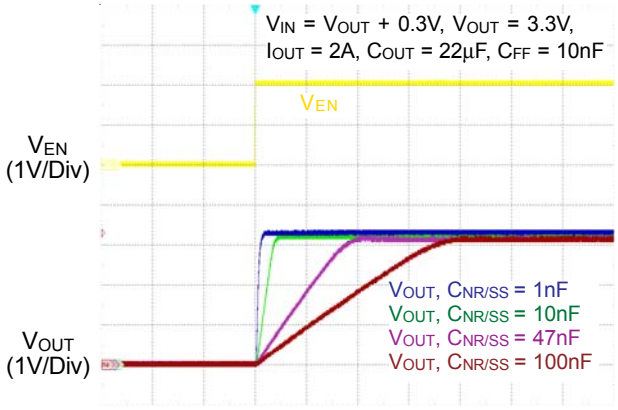

Load Transient Response

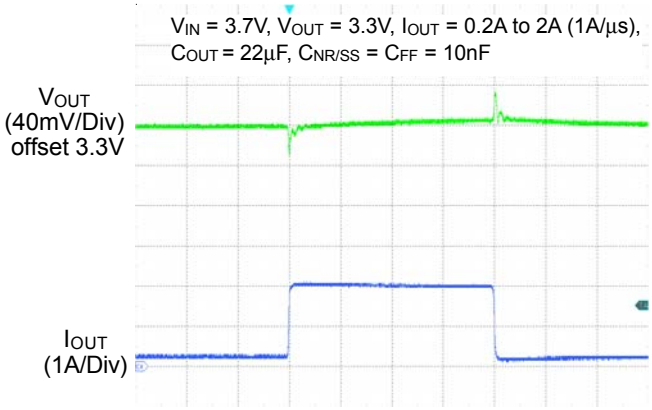

Load Transient Response vs. Load Slew Rate

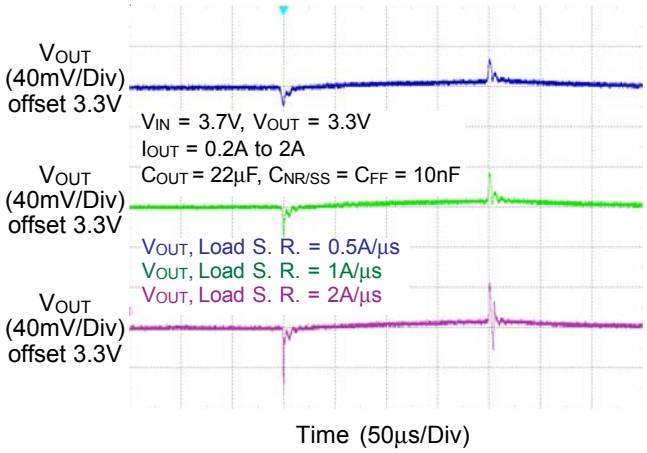

Enable Voltage vs. Temperature

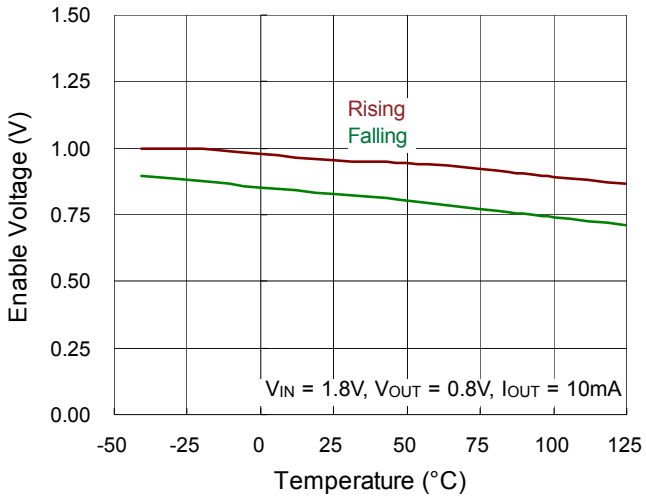

Dropout Voltage vs. Input Voltage

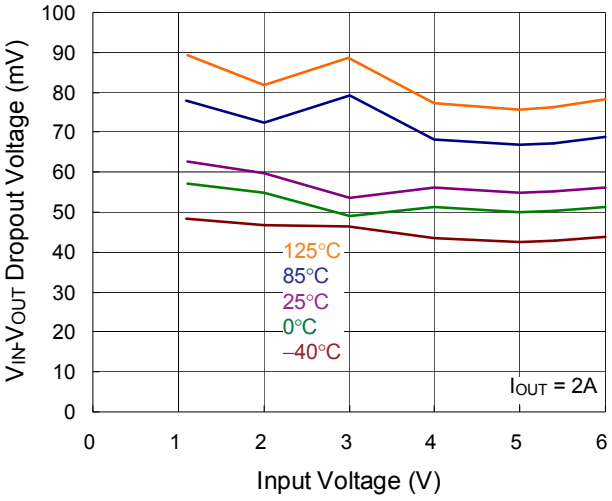

Dropout Voltage vs. Output Current

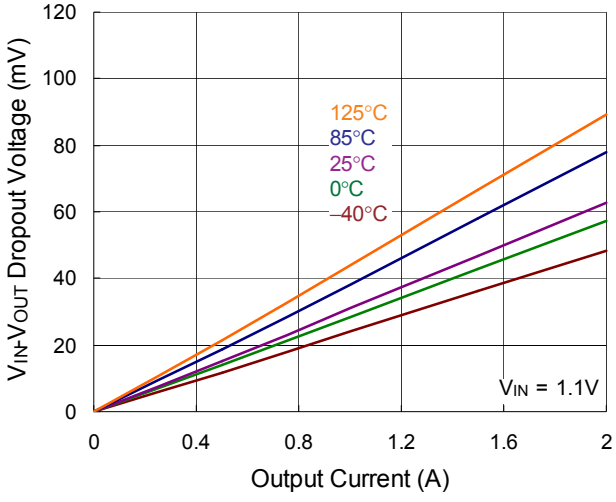

Copyright ©2019 Richtek Technology Corporation. All rights reserved. RICHTEK is a registered trademark of Richtek Technology Corporation.

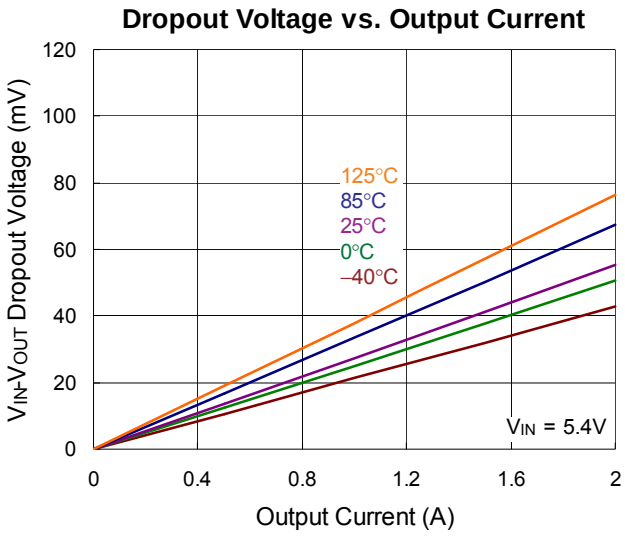

Copyright ©2019 Richtek Technology Corporation. All rights reserved. RICHTEK is a registered trademark of Richtek Technology Corporation.

Application Information

The RTQ2532W is a high current, low-noise, high accuracy, low-dropout linear regulator which is capable of sourcing 2A with maximum dropout of 125mV . The input voltage operating range is 1.1V to 6.5V, and the adjustable output voltage is 0.8V to (V_{IN} – V_{DROP}) according to the external resistor setting or 0.8V to 3.95V via PCB Layout to short specific pins and get the required output target.

Output Voltage Setting

The output voltage of the RTQ2532W can be set by external resistors or by using the output voltage setting pins (50mV, 100mV, 200mV, 400mV, 800mV and 1.6V) to achieve different output targets.

By using external resistors, the output voltage is determined by the values of R1 and R2 as shown in Figure 3. The values of R1 and R2 can be calculated for any voltage value using the following formula :

$$V_{OUT} = 0.8 \times \frac{R1 + R2}{R2}$$

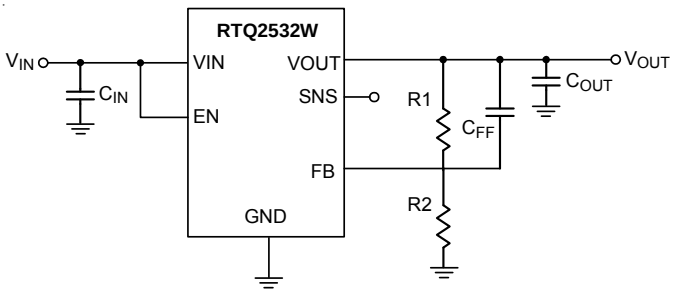

Figure 3. Output Voltage Set by External Resistors

The RTQ2532W can also short pins 5, 6, 7, 9, 10, and 11 to ground and program the regulated output voltage level without external resistors after the SNS pin is connected to the VOUT. Pins 5, 6, 7, 9, 10, and 11 are connected with internal resistor pairs. Each pin is either connected to ground (active) or left open (floating).

Voltage programming is set as the sum of the internal reference voltage (V_{REF} = 0.8V) plus the accumulated sum of the respective voltages assigned to each active pin as illustrated in figure 4.

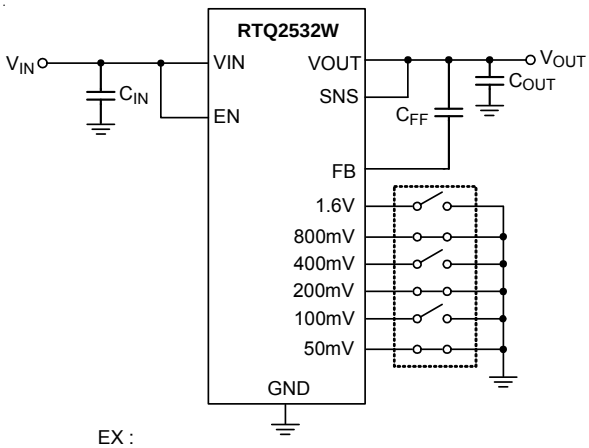

Figure 4. Output Setting without External Resistors

Table 2 summarizes these voltage values associated with each active pin setting for reference. By leaving all programming pins open, or floating, the output is thereby programmed to the minimum possible output voltage which equals to V_{REF} (0.8V). The maximum output target can be supported up to 3.95V after all pins 5, 6, 7, 9, 10 are shorted with ground at the same time.

Dropout Voltage

The dropout voltage refers to the voltage difference between the VIN and VOUT pins while operating at a specific output current. The dropout voltage V_{DROP} also can be expressed as the voltage drop on the pass-FET at a specific output current (I_{RATED}) while the pass-FET is fully operating in the ohmic region and the pass-FET can be characterized as a resistance $R_{DS(ON)}$. Thus, the dropout voltage can be defined as (V_{DROP} = V_{IN} – V_{OUT} = $R_{DS(ON)}$ x I_{RATED}). For normal operation, the suggested LDO operating range is (V_{IN} > V_{OUT} + V_{DROP}) for good transient response and PSRR performance. However, operation in the ohmic region will degrade the performance severely.

C_{IN} and C_{OUT} Selection

The RTQ2532W is designed to support low-series-resistance (ESR) ceramic capacitors. X7R, X5R, and COG-rated ceramic capacitors are recommended due to its good capacitive stability across differenet temperatures, whereas the use of Y5V-rated capacitors is not recommended because of large capacitance variations.

Copyright ©2019 Richtek Technology Corporation. All rights reserved. RICHTEK is a registered trademark of Richtek Technology Corporation.

However, the capacitance of ceramic capacitors varies with operating voltage and temperature, and the design engineer must be aware of these characteristics. Ceramic capacitors are usually recommended to be derated by 50%. A 22µF or greater output ceramic capacitor (or 10µF effective capacitance) is suggested to ensure stability. Input capacitance is selected to minimize transient input drop during load current steps. For general applications, an input capacitor of at least 22µF is highly recommended for minimal input impedance. If the trace inductance between the RTQ2532W input pin and power supply is high, a fast load transient can cause VIN voltage level ringing above the absolute maximum voltage rating which damages the device. Adding more input capacitors is available to restrict the ringing and keep it below the device absolute maximum ratings.

Feed-Forward Capacitor (C_{FF})

The RTQ2532W is designed to be stable without the external feed-forward capacitor (C_{FF}). However, a 10nF external feed-forward capacitor optimizes the transient, noise, and PSRR performances. A higher capacitance of C_{FF} can also be used, but the start-up time will be longer and the power-good signal will incorrectly indicate that the output voltage is settled.

Soft-Start and Noise Reduction ($C_{NR/SS}$)

The RTQ2532W is designed for a programmable, monotonic soft-start time during the output rising, which can be achieved via an external capacitor ($C_{NR/SS}$) on NR/SS pin. Using an external $C_{NR/SS}$ is recommended for general application. It is not only for the in-rush current minimization but also helps reduce the noise component from the internal reference.

During the monotonic start-up procedure, the error amplifier of the RTQ2532W tracks the voltage ramp of the external soft-start capacitor ($C_{NR/SS}$) until the voltage approaches the internal reference 0.8V. The soft-start ramp time can be calculated with Equation a1, which depends on the soft-start charging current ($I_{NR/SS}$), the soft-start capacitance ($C_{NR/SS}$), and the internal reference 0.8V (V_{REF}).

$$t_{SS} = \frac{(V_{REF} \times C_{NR/SS})}{I_{NR/SS}} \quad (a1)$$

For noise-reduction, $C_{NR/SS}$ in conjunction with an internal noise-reduction resistor forms a low-pass filter (LPF) and filters out the noise from the internal bandgap reference before being amplified via the error amplifier, thus reducing the total device noise floor.

Input Inrush Current

During start-up, the input Inrush current into the VIN pin consists of the sum of load current and the charging current of the output capacitor. The inrush current is difficult to measure because the input capacitor must be removed, which is not recommended. Generally, the soft-start inrush current can be estimated by Equation b1, where $V_{OUT}(t)$ is the instantaneous output voltage of the power-on ramp, $dV_{OUT}(t) / dt$ is the slope of the V_{OUT} ramp and R_{LOAD} is the resistive load impedance.

$$I_{OUT}(t) = \frac{\left(C_{OUT} \times dV_{OUT}(t)\right)}{dt} + \left(\frac{V_{OUT}(t)}{R_{LOAD}}\right) \quad (b1)$$

Under-Voltage Lockout (UVLO)

The Under-Voltage Lockout (UVLO) threshold is the minimum input operational voltage range that ensures the device stays disabled. Figure 5 explains that the UVLO circuits are triggered between three different input voltage events(duration a, b and c), assuming $V_{EN} \geq V_{EN_H}$ all the time. For duration "a", the input voltage starts rising. When V_{IN} is over the UVLO rising threshold, V_{OUT} starts the power-on process. Then, when V_{OUT} reaches the target level, and it is under regulation. During "b", although the power line has a voltage drop, it does not drop below the UVLO low threshold (falling threshold). As a result, the device maintains normal operation, and V_{OUT} is still regulated. At duration "c", V_{IN} drops below the UVLO falling threshold, so the control loop is disabled and there is no regulation; meanwhile, V_{OUT} drops. For general application, instant power line transient with long power trace at the VIN pin may have V_{IN} level unstable and force a trap as shown in duration "c" which makes V_{OUT} collapse. In this case, adding more input capacitance or improving input trace layout on PCB are effective to improve input power stabilization.

Copyright ©2019 Richtek Technology Corporation. All rights reserved. RICHTEK is a registered trademark of Richtek Technology Corporation.

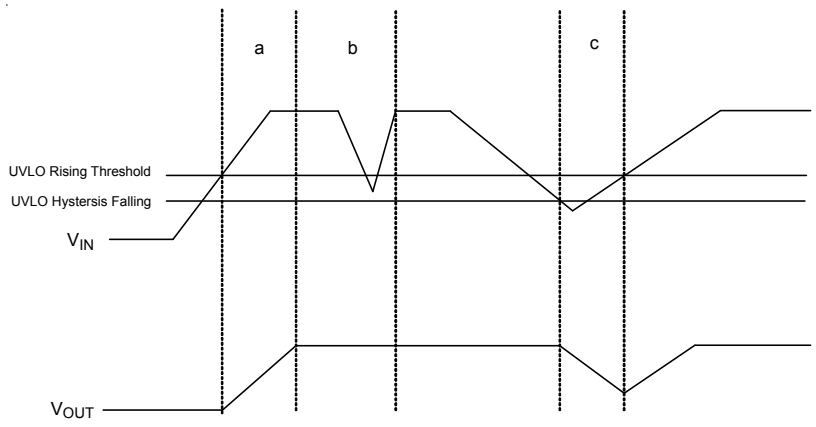

Figure 5. Under-Voltage Lockout Trigging Conditions and Output Variation

Power-Good (PGOOD) Function

The power-good function monitors the voltage level at the feedback pin to indicate that the output voltage status is normal or not. This function enables other devices receive the RTQ2532W's power-good signal as a logic signal that can be used for the sequence design of the system application. The PGOOD pin is an open-drain structure and an external pull-up resistor connected to an external supply is necessary. The pull-up resistor value between 10kΩ to 100kΩ is recommended for proper operation. The lower limit of 10kΩ results from the maximum pull-down strength of the power-good transistor, and the upper limit of 100kΩ results from the maximum leakage current at the power-good node.

Figure 6 demonstrates some PGOOD scenarios versus VIN, EN and protection status. During "a", V_{EN} is higher than the V_{EN_H} threshold, and the device is under operation. In this period, V_{OUT} starts rising (the rising time is related to the soft-start capacitor $C_{NR/SS}$). When V_{OUT} is over the PGOOD hysteresis threshold, the reflected feedback voltage V_{FB} exceeds V_{PGOOD_HYS} threshold. Cconsequently, the PGOOD pin becomes a high impedance node. The duration "b" indicates some unpredictable operation (ex : OTP, OCP or severe output voltage drop caused by very fast load variation). When V_{FB} is lower than the V_{IT_PGOOD} threshold, V_{PGOOD} is pulled to GND, which indicates that the output voltage is not ready. In duration "c", V_{OUT} has a small drop which is not lower than the PGOOD falling threshold; the PGOOD pin remains in high impedance. After V_{EN} becomes logic "0", V_{PGOOD} is pulled to GND as shown in duration "d".

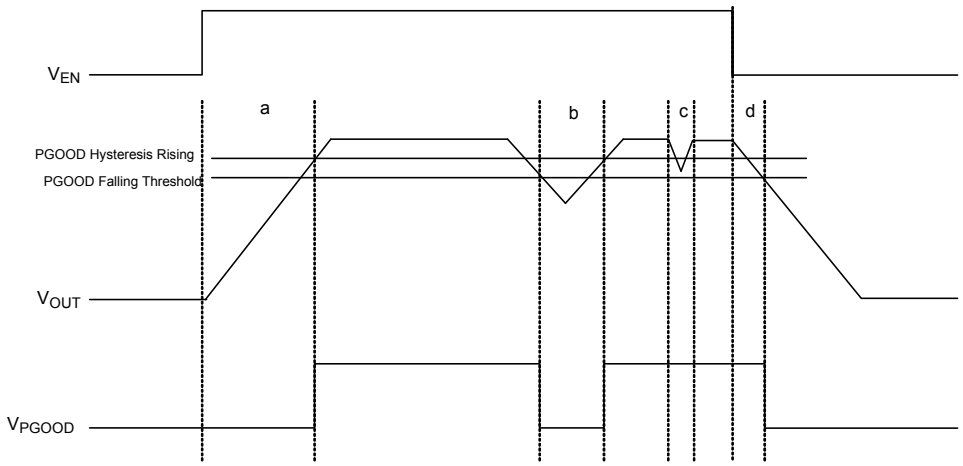

Figure 6. PGOOD Trigger Scenario with Different Operating Status

Copyright ©2019 Richtek Technology Corporation. All rights reserved. RICHTEK is a registered trademark of Richtek Technology Corporation.

Reverse Current Protection

The reverse current from V_{OUT} to V_{IN} that flows through the body diode of the pass element instead of the normal conducting channel can happen if the maximum VOUT exceeds V_{IN} + 0.3V; in this case, the pass element may be damaged.

For example, if the output is biased above the input supply voltage level or the input supply has an instant drop at light load operation that makes $V_{IN} < V_{OUT}$. As shown in Figure 7, an external Schottky diode can be added to prevent the pass element be damaged from the reverse current.

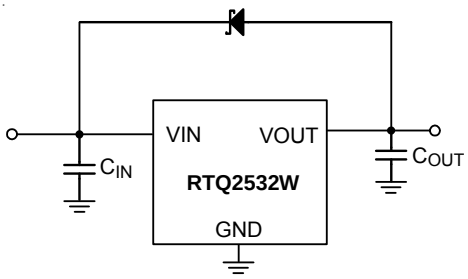

Figure 7. Application Circuit for Reverse Current Protection

Thermal Considerations

Thermal protection limits power dissipation in the RTQ2532W. When power dissipation on the pass element ($P_{DIS} = (V_{IN} - V_{OUT}) \times I_{OUT}$) is too high and raises the junction operation temperature over 160°C, the OTP circuit starts the thermal shutdown function and turns the pass element off. The pass element turns on again after the junction temperature cools down by 20°C.

The output is shorted to ground when there is short circuit at the output. This procedure can reduce the chip temperature and provide maximum safety to end users when output short circuit occurs.

The junction temperature should never exceed the absolute maximum junction temperature $T_{J(MAX)}$, listed under Absolute Maximum Ratings, to avoid permanent damage to the device. The maximum allowable power dissipation depends on the thermal resistance of the IC package, the PCB layout, the rate of surrounding airflow, and the difference between the junction and ambient temperatures. The maximum power dissipation can be calculated using the following formula :

$P_{D(MAX)} = (T_{J(MAX)} - T_A) / \theta_{JA}$

where $T_{J(MAX)}$ is the maximum junction temperature, T_A is the ambient temperature, and θ_{JA} is the junction-to-ambient thermal resistance.

For continuous operation, the maximum operating junction temperature indicated under Recommended Operating Conditions is 125°C. The junction-to-ambient thermal resistance, θ_{JA}, is highly package dependent. For a VQFN-20L 5x5 package, the thermal resistance, θ_{JA}, is 35.8°C/W on a high effective thermal-conductivity four-layer test board. The maximum power dissipation at T_A = 25°C can be calculated as below :

$P_{D(MAX)}$ = (125°C – 25°C) / (35.8°C/W) = 2.79W for a VQFN-20L 5x5 package.

The maximum power dissipation depends on the operating ambient temperature for the fixed $T_{J(MAX)}$ and the thermal resistance, θ_{JA}. The derating curve in Figure 8 allow the designer to see the effect of rising ambient temperature on the maximum power dissipation.

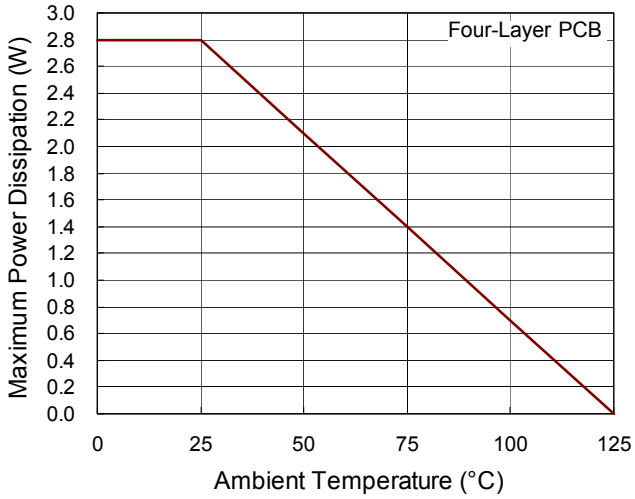

Figure 8. Derating Curve of Maximum Power Dissipation

Layout Considerations

For best performance of the RTQ2532W, the PCB layout suggestions below are highly recommended. All circuit components should be placed on the same side and as close to the respective LDO pin as possible. Place the ground return path connection to the input and output capacitor. Connect the ground plane with a wide copper

Copyright ©2019 Richtek Technology Corporation. All rights reserved. RICHTEK is a registered trademark of Richtek Technology Corporation.

surface for good thermal dissipation. Using vias and long power traces for the input and output capacitors connections is not recommended and has negative effects on performance. Figure 9 shows a layout example that reduces conduction trace loops, helping to minimize inductive parasitics and load transient effects while improving the circuit stability.

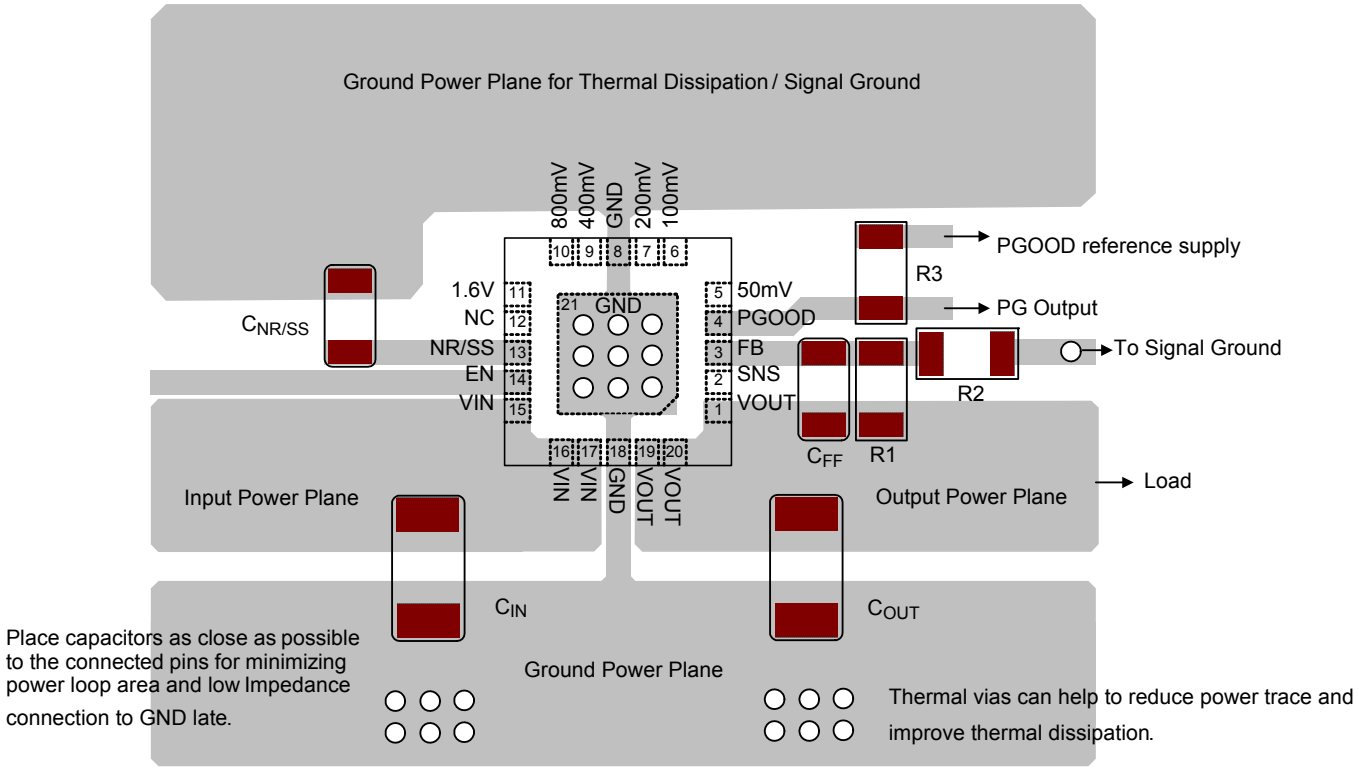

Figure 9. PCB Layout Guide

Copyright ©2019 Richtek Technology Corporation. All rights reserved. RICHTEK is a registered trademark of Richtek Technology Corporation.

Outline Dimension

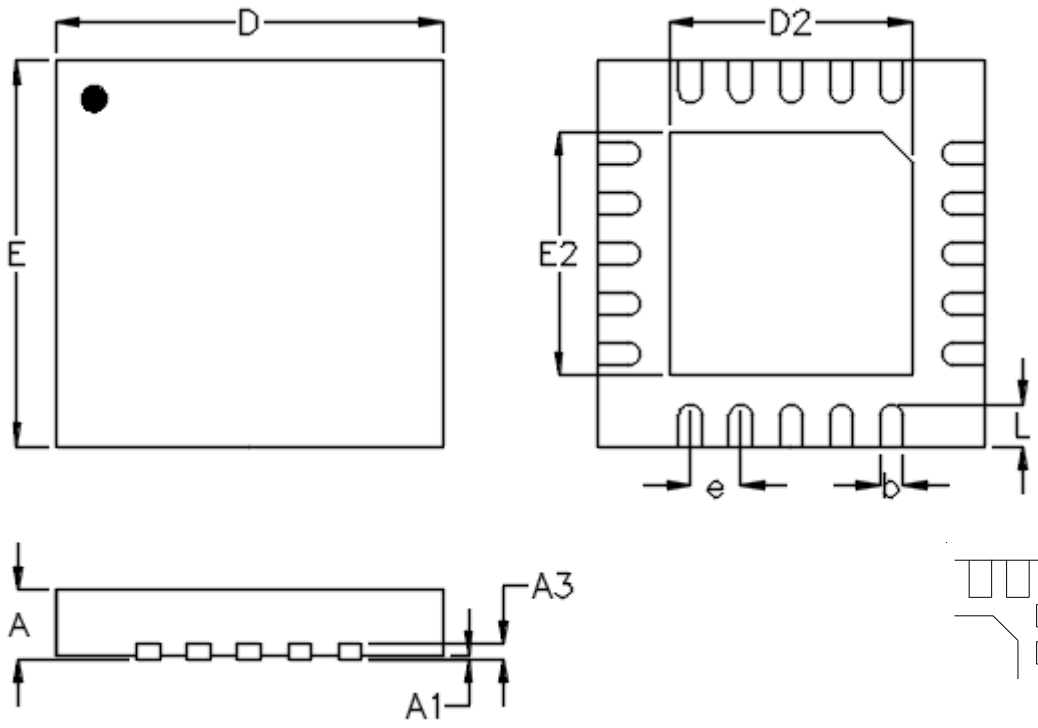

DETAIL A

Pin #1 ID and Tie Bar Mark Options

Note : The configuration of the Pin #1 identifier is optional, but must be located within the zone indicated.

Symbol	Dimensions In Millimeters		Dimensions In Inches	
	Min.	Max.	Min.	Max.
A	0.800	1.000	0.031	0.039
A1	0.000	0.050	0.000	0.002
A3	0.175	0.250	0.007	0.010
b	0.250	0.350	0.010	0.014
D	4.950	5.050	0.195	0.199
D2	3.100	3.200	0.122	0.126
E	4.950	5.050	0.195	0.199
E2	3.100	3.200	0.122	0.126
e	0.650		0.026	
L	0.500	0.600	0.020	0.024

V-Type 20L QFN 5x5 Package

Copyright ©2019 Richtek Technology Corporation. All rights reserved. RICHTEK is a registered trademark of Richtek Technology Corporation.

Footprint Information

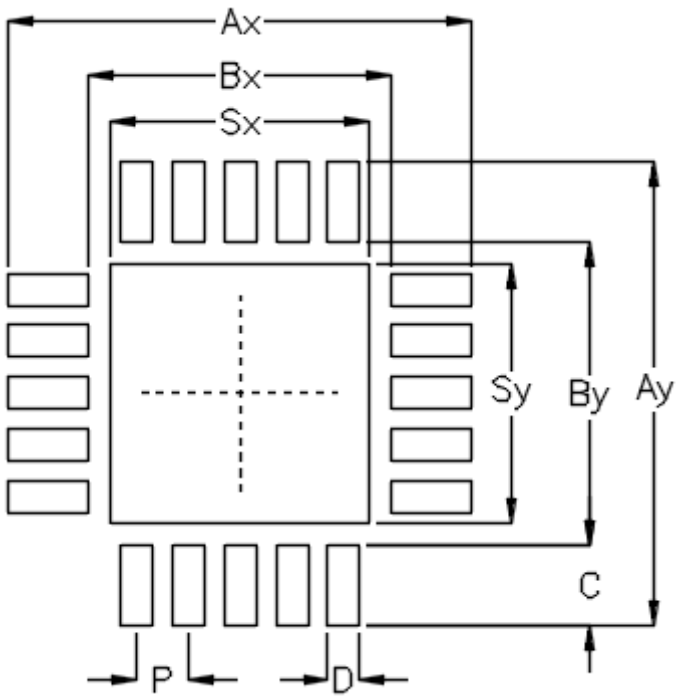

Package	Number of Pin	Footprint Dimension (mm)									Tolerance
		P	Ax	Ay	Bx	By	C	D	Sx	Sy	
V/W/U/XQFN5*5-20	20	0.65	5.80	5.80	3.80	3.80	1.00	0.40	3.25	3.25	±0.05

Richtek Technology Corporation
14F, No. 8, Tai Yuen 1st Street, Chupei City
Hsinchu, Taiwan, R.O.C.
Tel: (8863)5526789

Richtek products are sold by description only. Customers should obtain the latest relevant information and data sheets before placing orders and should verify that such information is current and complete. Richtek cannot assume responsibility for use of any circuitry other than circuitry entirely embodied in a Richtek product. Information furnished by Richtek is believed to be accurate and reliable. However, no responsibility is assumed by Richtek or its subsidiaries for its use; nor for any infringements of patents or other rights of third parties which may result from its use. No license is granted by implication or otherwise under any patent or patent rights of Richtek or its subsidiaries.