Dual Channel Synchronous-Rectified Buck MOSFET Driver

General Description

The RT9602 is a, twin power channel MOSFET driver specifically designed to drive four power N-Channel MOSFETs in a synchronous-rectified buck converter topology. These drivers combined with a RT9237/RT9241 series of Multi-Phase Buck PWM controller provide a complete core voltage regulator solution for advanced microprocessors.

The RT9602 can provide flexible gate driving for both high side and low side drivers. This gives more flexibility of MOSFET selection.

The output drivers in the RT9602 have the capability to drive a 3000pF load with a 40ns propagation delay and 80ns transition time. This device implements bootstrapping on the upper gates with only a single external capacitor required for each power channel. This reduces implementation complexity and allows the use of higher performance, cost effective, N-Channel MOSFETs. Adaptive shoot-through protection is integrated to prevent both MOSFETs from conducting simultaneously.

The RT9602 can detect high side MOSFET drain-to-source electrical short at power on and pull the 12V power by low side MOS and cause power supply to go into over current shutdown to prevent damage of CPU.

Ordering Information

RT9602□ □

- Package type
  S : SOP-14
- Operating temperature range
  C: Commercial standard

Features

- **Drives Four N-Channel MOSFETs**
- **Adaptive Shoot-Through Protection**
- **Internal Bootstrap Devices**
- **Small 14-Lead SOIC Package**
- **5V to 12V Gate-Drive Voltages for Optimal Efficiency**
- **Tri-State Input for Bridge Shutdown**
- **Supply Under-Voltage Protection**
- **Power ON Over-Voltage Protection**

Applications

- Core Voltage Supplies for Intel Pentium® 4 and AMD® Athlon™ Microprocessors
- High Frequency Low Profile DC-DC Converters
- High Current Low Voltage DC-DC Converters

Pin Configurations

Part Number	Pin Configurations
RT9602CS (Plastic SOP-14)	TOP VIEW 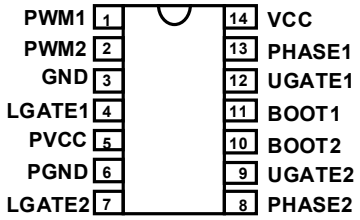

Pin Description

Pin No.	Pin Name	Pin Function
1	PWM1	Channel 1 PWM Input
2	PWM2	Channel 2 PWM Input
3	GND	Ground Pin
4	LGATE1	Lower Gate Drive of Channel 1
5	PVCC	Upper and Lower Gate Driver Power Rail
6	PGND	Lower Gate Driver Ground Pin
7	LGATE2	Lower Gate Drive of Channel 2
8	PHASE2	Connect this pin to phase point of channel 2. Phase point is the connection point of high side MOSFET source and low side MOSFET drain
9	UGATE2	Upper Gate Drive of Channel 2
10	BOOT2	Floating Bootstrap Supply Pin of Channel 2
11	BOOT1	Floating Bootstrap Supply Pin of Channel 1
12	UGATE1	Upper Gate Drive of Channel 1
13	PHASE1	Connect this pin to phase point of channel 1. Phase point is the connection point of high side MOSFET source and low side MOSFET drain
14	VCC	Control Logic Power Supply

Function Block Diagram

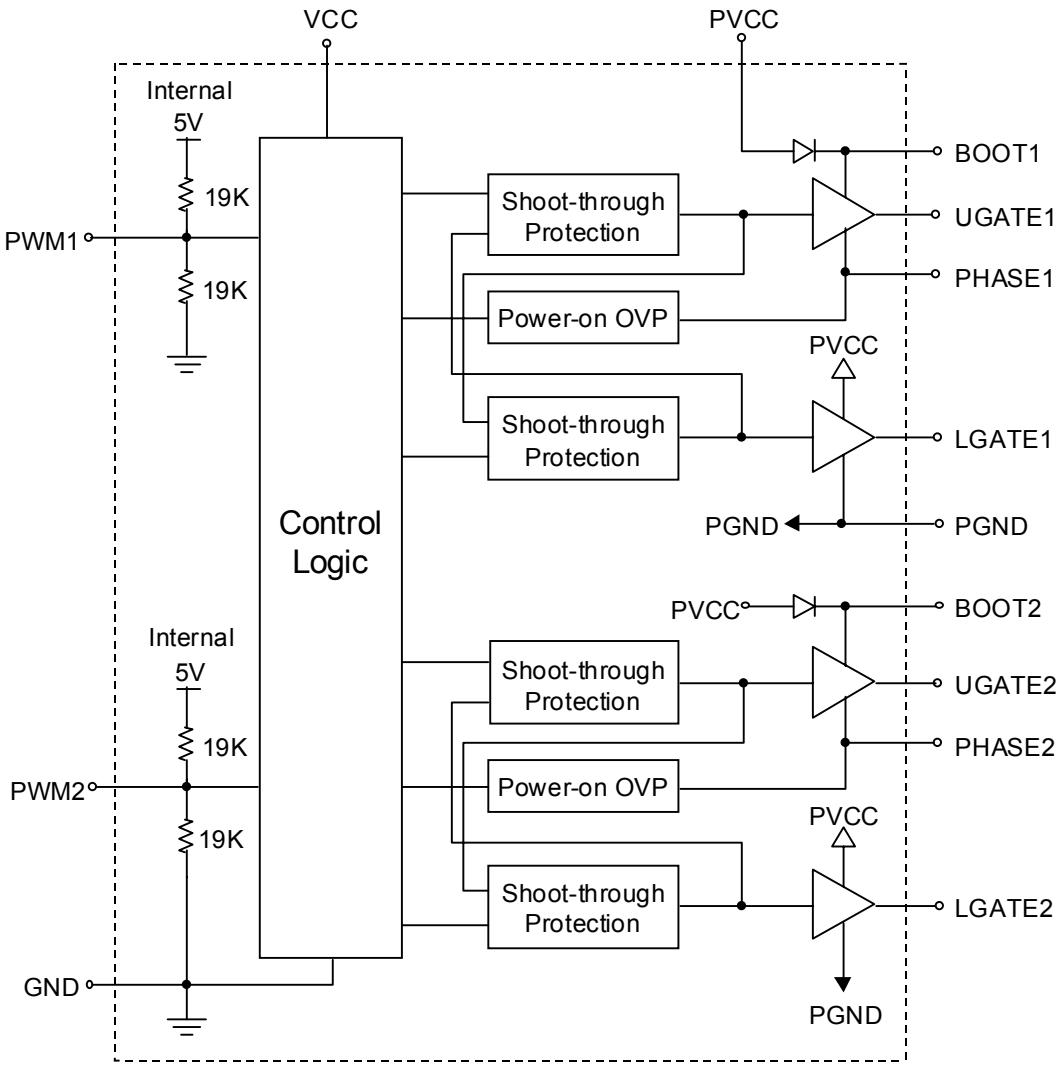

Absolute Maximum Ratings

- Supply Voltage (VCC) ---------- 15V
- Supply Voltage (PVCC) ---------- VCC + 0.3V
- BOOT Voltage (V_{BOOT}-V_{PHASE}) ---------- 15V
- Input Voltage (VPWM) ---------- GND–0.3V to 7V
- UGATE ---------- V_{PHASE}-0.3V to V_{BOOT}+0.3V
- LGATE ---------- GND-0.3V to V_{PVCC}+0.3V
- Package Thermal Resistance
  SOP-14, θ_{JA} ---------- 160°C /W
- Ambient Temperature ---------- 0°C ~ 70°C
- Junction Temperature ---------- 0°C ~ 125°C
- Storage Temperature Range ---------- -40°C ~ 150°C
- Lead Temperature (Soldering, 10 sec.) ---------- 260°C
- ESD Level
  HBM ---------- 2KV
  MM ---------- 200V

Electrical Characteristics

Parameter	Symbol	Test Conditions	Min	Typ	Max	Units
VCC Supply Current						
Bias Supply Current	I_{VCC}	f_{PWM} = 250KHz, V_{PVCC} = 12V, Cboot = 0.1μF, Rphase = 20Ω	--	3	--	mA
Power Supply Current	I_{PVCC}	f_{PWM} = 250kHz, V_{PVCC} = 12V, Cboot = 0.1μF, Rphase = 20Ω	--	8	--	mA
Power-On Reset						
VCC Rising Threshold			9.1	9.6	10	V
VCC Falling Threshold			7.5	8.1	8.5	V
PWM Input						
Maximum Input Current		V_{PWM} = 0 or 5V	--	200	--	μA
PWM Floating Voltage		Vcc=12V	--	1.9	--	V
PWM Rising Threshold			--	3.7	--	V
PWM Falling Threshold			--	1.1	--	V
UGATE Rise Time		V_{PVCC} = V_{VCC} = 12V, 3nF load	--	30	--	ns
LGATE Rise Time		V_{PVCC} = V_{VCC} = 12V, 3nF load	--	30	--	ns
UGATE Fall Time		V_{PVCC} = V_{VCC} = 12V, 3nF load	--	40	--	ns
LGATE Fall Time		V_{PVCC} = V_{VCC} = 12V, 3nF load	--	30	--	ns
UGATE Turn-Off Propagation Delay		V_{VCC} = V_{PVCC} = 12V, 3nF load	--	60	--	ns
LGATE Turn-Off Propagation Delay		V_{VCC} = V_{PVCC} = 12V, 3nF load	--	45	--	ns
Shutdown Window			1.1	--	3.7	V

To be continued

Parameter	Symbol	Test Conditions	Min	Typ	Max	Units
Output						
Upper Drive Source	R_{UGATE}	V_{VCC} = 12V, V_{PVCC} = 12V	--	1.5	--	Ω
Upper Drive Sink	R_{UGATE}	V_{VCC} = 12V, V_{PVCC} = 12V	--	1.45	2	Ω
Lower Drive Source	R_{LGATE}	V_{VCC} = 12V, V_{PVCC} = 12V	--	1.6	--	Ω
Lower Drive Sink	R_{LGATE}	V_{VCC} = V_{PVCC} = 12V	--	0.75	1	Ω

Operation Descriptions

The RT9602 has power on protection function which held UGATE and LGATE low before V_{CC} up across the rising threshold voltage. After the initialization, the PWM signal takes the control. The rising PWM signal first forces the LGATE signal turns low then UGATE signal is allowed to go high just after a non-overlapping time to avoid shoot-through current. The falling of PWM signal first forces UGATE to go low. When UGATE and PHASE signal reach a predetermined low level, LGATE signal is allowed to turn high. The non-overlapping function is also presented between UGATE and LGATE signal transient.

The PWM signal is recognized as high if above rising threshold and as low if below falling threshold. Any signal level in this window is considered as tri-state, which causes turn-off of both high side and low-side MOSFET. When PWM input is floating (not connected), internal divider will pull the PWM to 1.9V to give the controller a recognizable level. The maximum sink/source capability of internal PWM reference is 60μA.

The PVCC pin provides flexibility of both high side and low side MOSFET gate drive voltages. If 8V, for example, is applied to PVCC, then high side MOSFET gate drive is 8V-1.5V(approximately, internal diode plus series resistance voltage drop). The low side gate drive voltage is exactly 8V.

The RT9602 implements a power on over-voltage protection function. If the PHASE voltage exceeds 1.5V at power on, the LGATE would be turn on to pull the PHASE low until the PHASE voltage goes below 1.5V. Such function can protect the CPU from damage by some short condition happened before power on, which is sometimes encountered in the M/B manufacturing line.

Typical Application Circuit

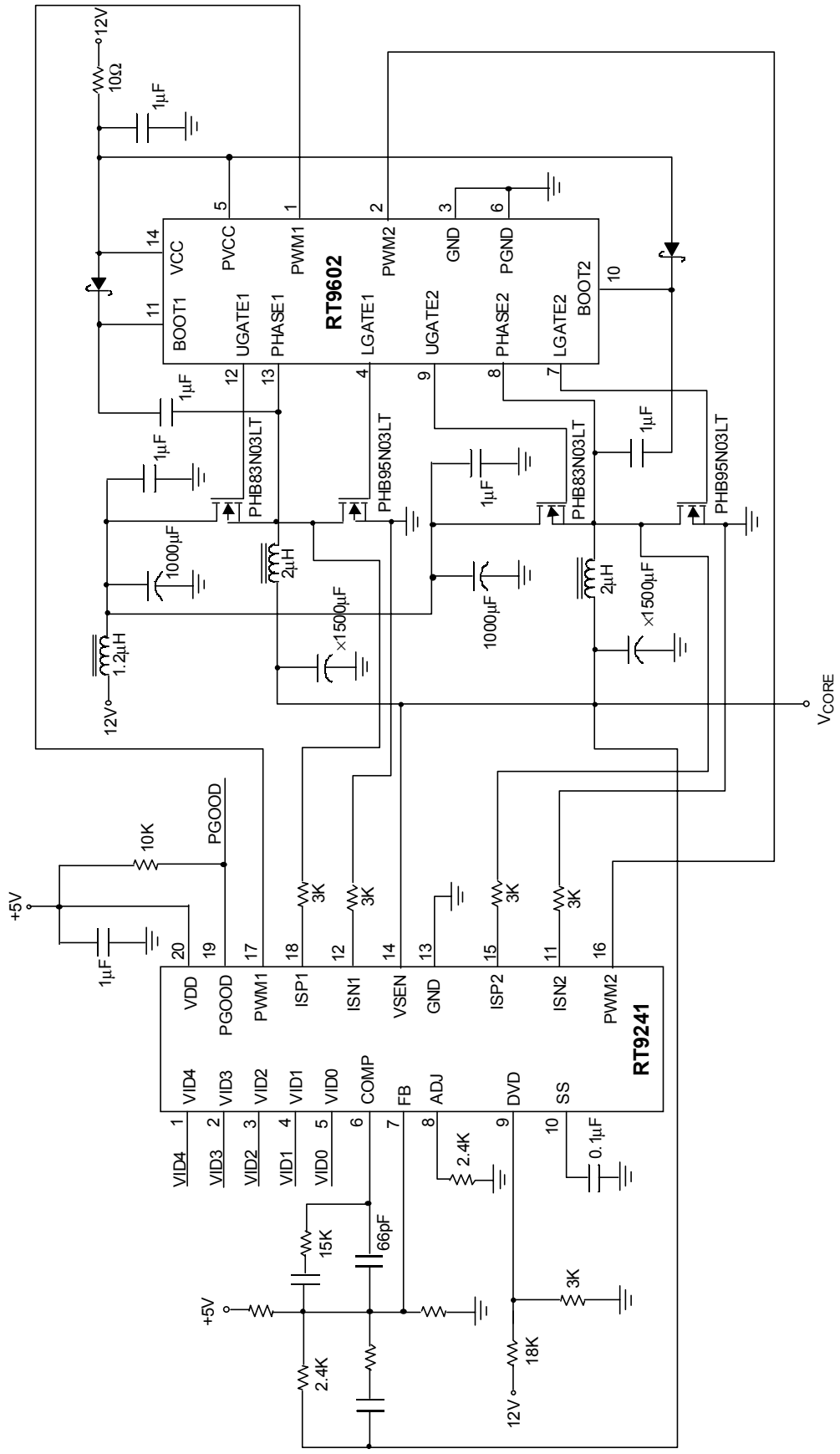

Package Information

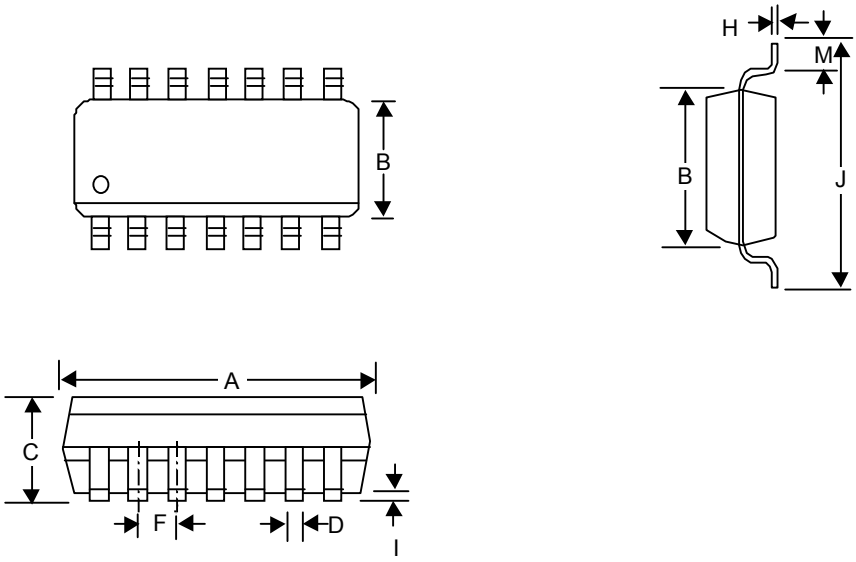

Symbol	Dimensions In Millimeters		Dimensions In Inches	
	Min	Max	Min	Max
A	8.534	8.738	0.336	0.344
B	3.810	3.988	0.150	0.157
C	1.346	1.753	0.053	0.069
D	0.330	0.508	0.013	0.020
F	1.194	1.346	0.047	0.053
H	0.178	0.254	0.007	0.010
I	0.102	0.254	0.004	0.010
J	5.791	6.198	0.228	0.244
M	0.406	1.270	0.016	0.050

14–Lead SOP Plastic Package

RICHTEK TECHNOLOGY CORP.
Headquarter
6F, No. 35, Hsintai Road, Chupei City
Hsinchu, Taiwan, R.O.C.
Tel: (8863)5510047 Fax: (8863)5537749

RICHTEK TECHNOLOGY CORP.
Taipei Office (Marketing)
8F-1, No. 137, Lane 235, Paochiao Road, Hsintien City
Taipei County, Taiwan, R.O.C.
Tel: (8862)89191466 Fax: (8862)89191465
Email: marketing@richtek-ic.com.tw