Tiny Package, Low Dropout Current Source

General Description

The RT9300A/B low-dropout bias supply for white LEDs is a high-performance alternative to the simple ballast resistors used in conventional white LED designs. The RT9300A/B uses a internal resistor to set the bias current for four LEDs, which are matched to 3%. The RT9300A/B's advantages over ballast resistors include much lower bias variation with supply voltage variation, significantly lower dropout voltage, and in some applications, significantly improved efficiency. The RT9300A/B requires a 60/45mV dropout at a 20/15mA load on each output to match the LED brightness.

Ordering Information

RT9300A/B □□

- Package Type
  E : SOT-23-6
- Operating Temperature Range
  P : Pb Free with Commercial Standard
  G : Green (Halogen Free with Commercial Standard)
- Sink Current
  A : 20mA
  B : 15mA

Note :

RichTek Pb-free and Green products are :

- RoHS compliant and compatible with the current requirements of IPC/JEDEC J-STD-020.
- Suitable for use in SnPb or Pb-free soldering processes.
- 100%matte tin (Sn) plating.

Features

- **Low 60/45mV Dropout at 20/15mA**
- **3% LED Current Matching**
- **Simple LED Brightness Control**
- **2.5V to 5.5V Supply Voltage Range**
- **Thermal Shutdown Protection**
- **RoHS Compliant and 100% Lead (Pb)-Free**

Applications

- Next-Generation Wireless Handsets
- PDAs, Palmtops, and Handy Terminals
- Digital Cameras, Camcorders
- Battery-Powered Equipment

Pin Configurations

(TOP VIEW)

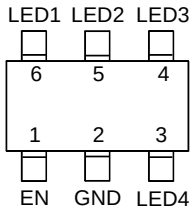

SOT-23-6

Note : There is no pin1 indicator on top mark for SOT-23-6 type, and pin 1 will be lower left pin when reading top mark from left to right.

Typical Application Circuit

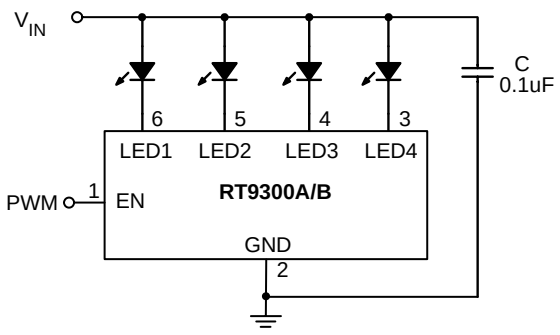

Figure 1. Application circuit for backlight.

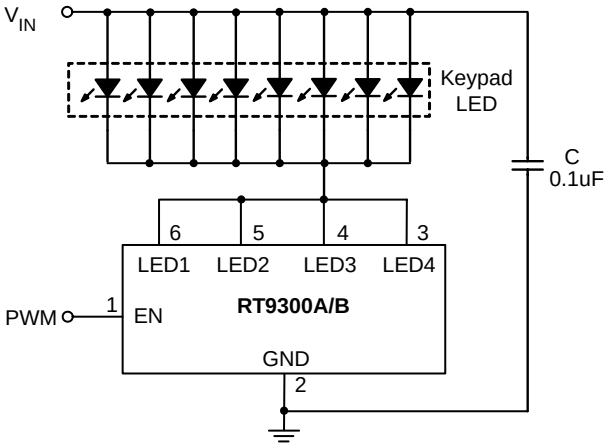

Figure 2. Application circuit for keypad.

Function Block Diagram

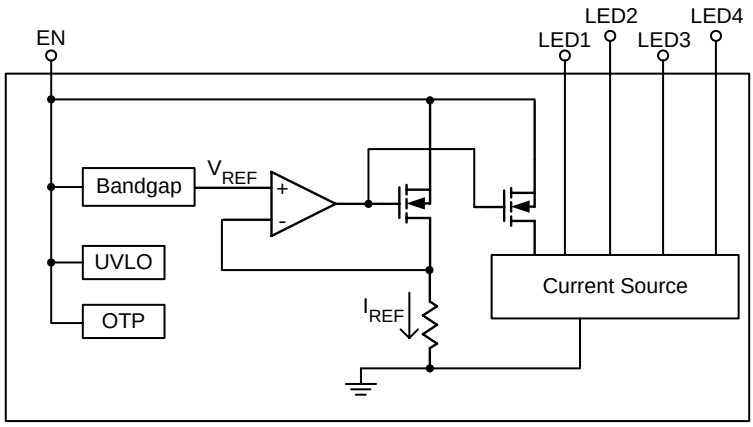

Functional Pin Description

Pin	Name	Function
1	EN	Chip Enable (Active High).
2	GND	Ground
3	LED4	LED4 Cathode Connection. Current flowing into LED4 is Constant. (20mA/15 mA) LED4 is High Impedance when EN is Low.
4	LED3	LED3 Cathode Connection. Current flowing into LED3 is Constant. (20mA/15 mA) LED3 is High Impedance when EN is Low.
5	LED2	LED2 Cathode Connection. Current flowing into LED2 is Constant. (20mA/15 mA) LED2 is High Impedance when EN is Low.
6	LED1	LED1 Cathode Connection. Current flowing into LED1 is Constant. (20mA/15 mA) LED1 is High Impedance when EN is Low.

Absolute Maximum Ratings (Note 1)

- Supply Input Voltage ---------- –0.3V to 6V
- The other pins ---------- –0.3V to 6V
- Power Dissipation, P_D @ T_A = 25°C
  SOT-23-6 ---------- 0.4W
- Package Thermal Resistance (Note 3)
  SOT-23-6, θ_{JA} ---------- 250°C/W
- Lead Temperature (Soldering, 10 sec.) ---------- 260°C
- Operation Temperature Range ---------- –40°C to 85°C
- Junction Temperature ---------- 0°C to 125°C
- Storage Temperature Range ---------- –65°C to 150°C
- ESD Susceptibility (Note 2)
  HBM (Human Body Mode) ---------- 2kV
  MM (Machine Mode) ---------- 200V

Electrical Characteristics

(V_{IN} = 3.7V, T_A = 25°C, Unless Otherwise specification)

Parameter	Symbol	Test Condition	Min	Typ	Max	Units
System Supply Input						
Operation Voltage Range	V_{EN}		2.5	--	5.5	V
Under Voltage Lock Out	V(UVLO)		--	2.1	--	V
UVLO Hysteresis			--	100	--	mV
LED Maximum Sink Current		RT9300A	--	20	--	mA
		RT9300B	--	15	--	
Quiescent Current	I_{EN}	I_{OUT} = 0,	--	--	600	uA
LED Dropout Voltage		I_{LED} = 20mA	--	60	--	mV
		I_{LED} = 15mA	--	45	--	
LED Current Deviation Matching			--	--	3	%
Digital Input High Level	V_{IH}	V_{EN} > V_{IH} for enable	2.5	--	--	V
Digital Input Low Level	V_{IL}	V_{EN} < V_{IL} for disable	--	--	0.7	V
OTP			--	170	--	C
OTP Hysteresis			--	10	--	C
Shut Down Current	I_{EN}	V_{EN} = 0.4V	--	--	1	uA
Initial Current	RT9300A		18	20	22	mA
	RT9300B		13.5	15	16.5	

Note 1. Stresses listed as the above "Absolute Maximum Ratings" may cause permanent damage to the device. These are for stress ratings. Functional operation of the device at these or any other conditions beyond those indicated in the operational sections of the specifications is not implied. Exposure to absolute maximum rating conditions for extended periods may remain possibility to affect device reliability.

Note 2. Devices are ESD sensitive. Handling precaution recommended.

Note 3. θ_{JA} is measured in the natural convection at T_A = 25°C on a low effective thermal conductivity test board (Single Layer, 1S) of JEDEC 51-3 therm\al measurement standard.

Note 4. Floating connection or pull low to disable this function.

Typical Operating Characteristics

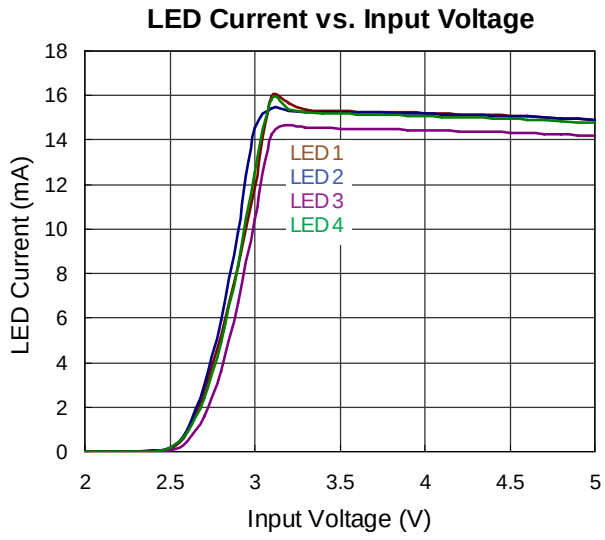

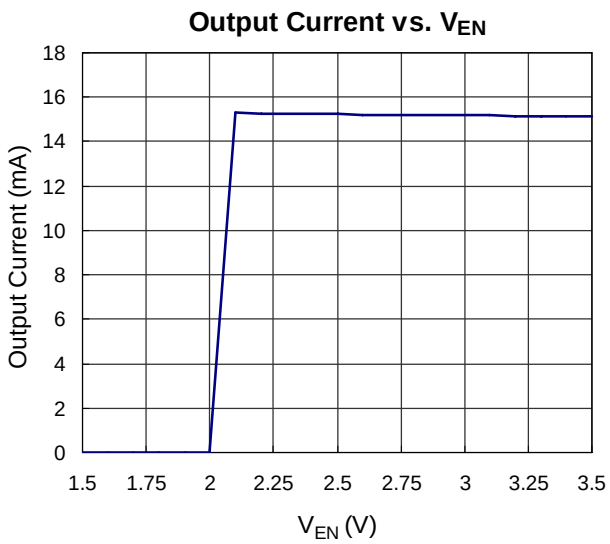

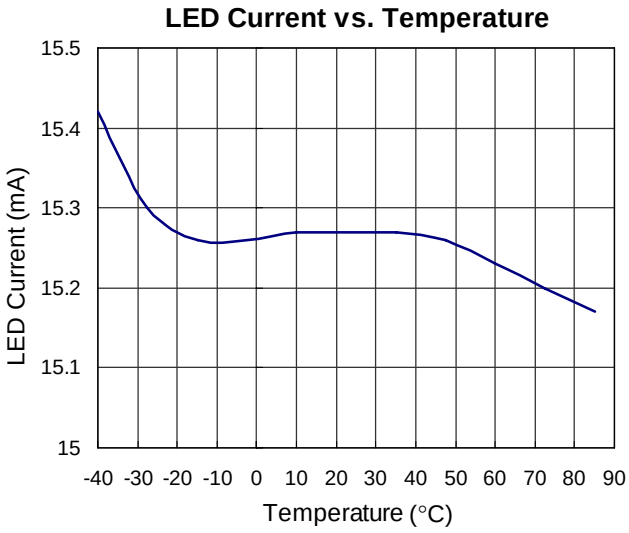

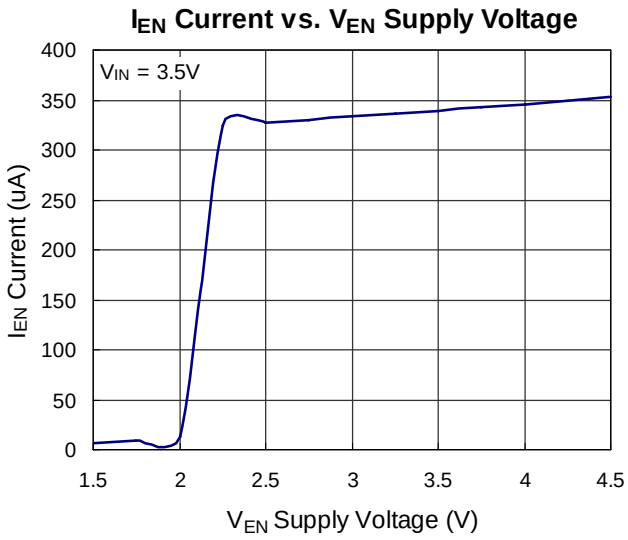

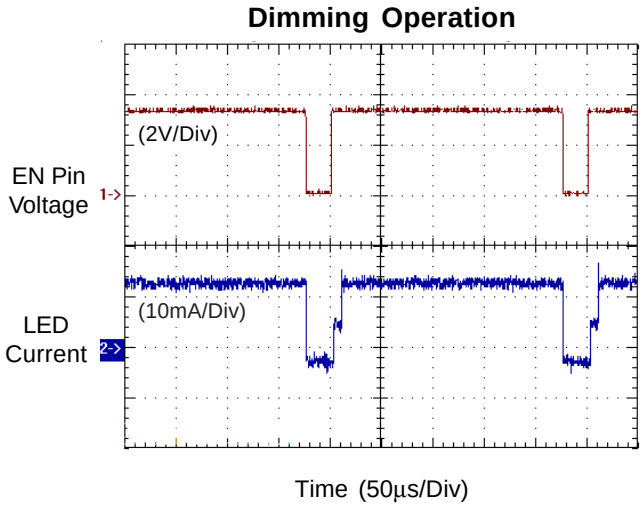

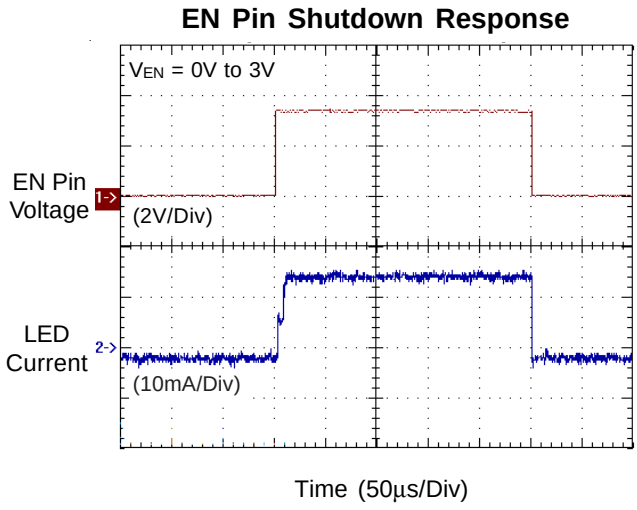

V_{IN} Transient Response

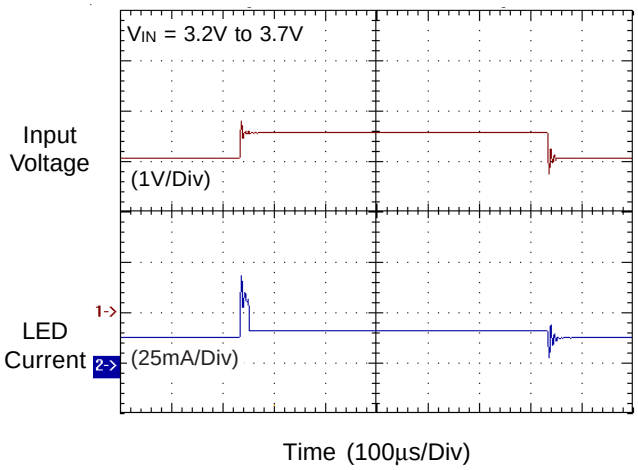

Outline Dimension

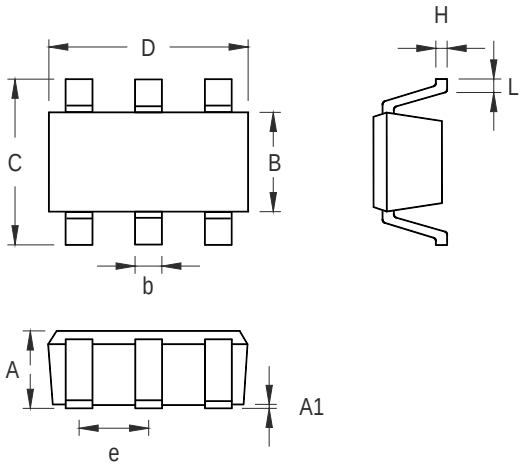

Symbol	Dimensions In Millimeters		Dimensions In Inches	
	Min	Max	Min	Max
A	0.889	1.295	0.031	0.051
A1	0.000	0.152	0.000	0.006
B	1.397	1.803	0.055	0.071
b	0.250	0.560	0.010	0.022
C	2.591	2.997	0.102	0.118
D	2.692	3.099	0.106	0.122
e	0.838	1.041	0.033	0.041
H	0.080	0.254	0.003	0.010
L	0.300	0.610	0.012	0.024

SOT-23-6 Surface Mount Package

Richtek Technology Corporation
Headquarter
5F, No. 20, Taiyuen Street, Chupei City
Hsinchu, Taiwan, R.O.C.
Tel: (8863)5526789 Fax: (8863)5526611

Richtek Technology Corporation
Taipei Office (Marketing)
8F, No. 137, Lane 235, Paochiao Road, Hsintien City
Taipei County, Taiwan, R.O.C.
Tel: (8862)89191466 Fax: (8862)89191465
Email: marketing@richtek.com