Dual, Low-Noise, 200mA LDO Regulator

General Description

The RT9182 is a dual-channel, low noise, and low dropout regulator supplying up to 200mA current at each channel. The output voltage ranges from 1.5V to 3.3V in 100mV increments and 2% accuracy by operating from a +2.7V to +5.5V input.

The RT9182 uses an internal PMOS as the pass device, which consumes 165uA supply current (both LDOs on) independent of load current and dropout conditions. The EN1 and EN2 pins control each output respectively. When both outputs shutdown simultaneously, the chip will be turn off and consumes nearly zero operation current which is suitable for battery-power devices. Other features include a current limiting, and over temperature protection.

Ordering Information

RT9182 □ □ □

Package Type
ES : SOT-23-6

Operating Temperature Range
P : Pb Free with Commercial Standard
G : Green (Halogen Free with Commercial Standard)

Output Voltage
A : 2.8V (Output1), 2.8V (Output2)
B : 3.0V (Output1), 3.0V (Output2)
C : 2.8V (Output1), 3.0V (Output2)
D : 2.8V (Output1), 2.5V (Output2)
E : 2.8V (Output1), 1.8V (Output2)
F : 2.5V (Output1), 2.5V (Output2)
G : 2.5V (Output1), 1.8V (Output2)
H : 3.3V (Output1), 2.5V (Output2)
I : 3.3V (Output1), 1.8V (Output2)
J : 3.0V (Output1), 2.5V (Output2)
K : 3.0V (Output1), 1.8V (Output2)
L : 2.8V (Output1), 1.85V (Output2)

Note :

Richtek Pb-free and Green products are :

- RoHS compliant and compatible with the current requirements of IPC/JEDEC J-STD-020.
- Suitable for use in SnPb or Pb-free soldering processes.
- 100%matte tin (Sn) plating.

Features

- **Up to 200mA Output Current (Each LDO)**
- **Dual Shutdown Pins Control Each Output**
- **124uV$_{RMS}$ Low Noise Output**
- **Current Limiting and Thermal Protection**
- **Short Circuit Protection**
- **120mV Dropout at 100mA Load**
- **Two LDOs in SOT-23-6 Package**
- **RoHS Compliant and 100% Lead (Pb)-Free**

Applications

- Cellular Phones
- Laptop, Notebook, and Palmtop Computers
- Battery-powered Equipment
- Hand-held Equipment
- Wireless LAN

Marking Information

For marking information, contact our sales representative directly or through a Richtek distributor located in your area, otherwise visit our website for detail.

Pin Configurations

(TOP VIEW)

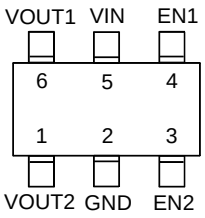

SOT-23-6

Note : There is no pin1 indicator on top mark for SOT-23-6 type, and pin 1 will be lower left pin when reading top mark from left to right.

Typical Application Circuit

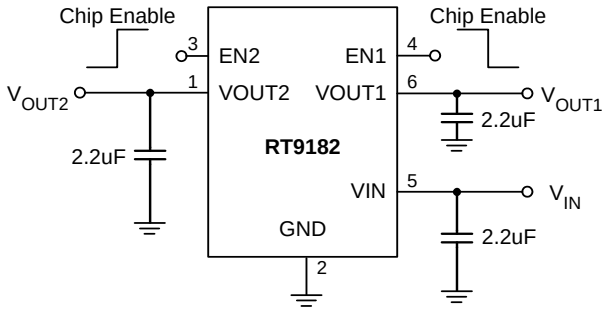

Functional Pin Description

Pin No.	Pin Name	Pin Function
1	VOUT2	Channel 2 Output Voltage
2	GND	Common Ground
3	EN2 Note	Chip Enable (Active High)
4	EN1 Note	Chip Enable (Active High)
5	VIN	Supply Input
6	VOUT1	Channel 1 Output Voltage

Note: If EN1 and EN2 are both low, both regulators and the reference turn off.

Function Block Diagram

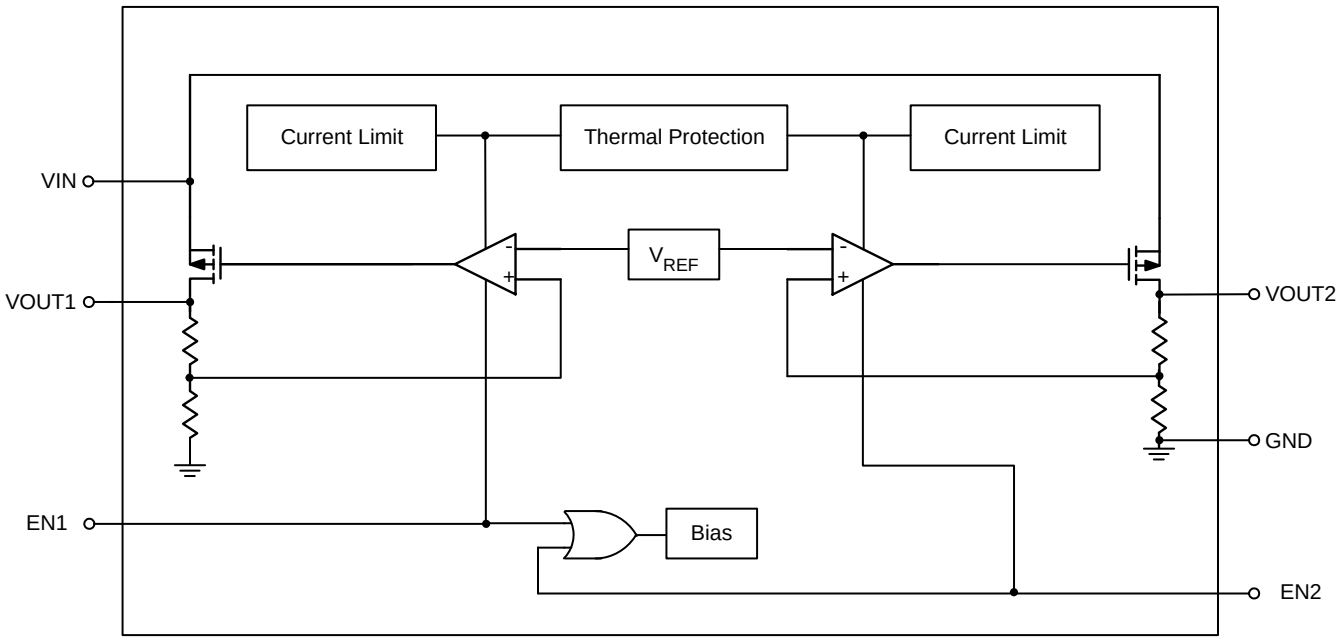

Absolute Maximum Ratings (Note 1)

- Supply Input Voltage ---------- 6.5V
- Power Dissipation, P_D @ T_A = 25°C
  SOT-23-6 ---------- 0.4W
- Package Thermal Resistance (Note 5)
  SOT-23-6, θ_{JA} ---------- 250°C/W
- Lead Temperature (Soldering, 10 sec.) ---------- 260°C
- Storage Temperature Range ---------- –65°C to 150°C
- ESD Susceptibility (Note 2)
  HBM (Human Body Mode) ---------- 2kV
  MM (Machine Mode) ---------- 200V

Recommended Operating Conditions (Note 3)

- Supply Input Voltage ---------- 2.7V to 5.5V
- Enable Input Voltage ---------- 0V to 5.5V
- Junction Temperature Range ---------- –40°C to 125°C

Electrical Characteristics

(V_{IN} = 3.6V, C_{IN} = C_{OUT} = 2.2uF, EN1 = EN2 = V_{IN}, typical values at T_A = 25°C, for each LDO unless otherwise specified.)

Parameter	Symbol	Test Conditions	Min	Typ	Max	Units
Output Voltage Accuracy (Load Regulation)	ΔV_{OUT}	I_L = 1mA to 200mA	-2	--	+2	%
Maximum Output Current	I_{MAX}	Continuous	200	--	--	mA
Current Limit	I_{LIM}	R_{LOAD} = 1Ω	500	--	1000	mA
Quiescent Current	I_G	No Load	--	165	260	μA
		I_{OUT} = 100mA (Both LDOs)	--	165	260	μA
Dropout Voltage (Note 4)	V_{DROP}	I_{OUT} = 1mA	--	1.2	--	mV
		I_{OUT} = 100mA	--	120	--	mV
		I_{OUT} = 200mA	--	255	--	mV
Line Regulation	ΔV_{LINE}	V_{IN} = (V_{OUT} +0.4V or 2.7V) to 5.5V I_{OUT} = 1mA	-0.2	--	+0.2	%/V
EN Input High Threshold	V_{IH}	V_{IN} = 2.7V to 5.5V	1.6	--	--	V
EN Input Low Threshold	V_{IL}	V_{IN} = 2.7V to 5.5V	--	--	0.4	V
EN Input Bias Current	I_{SD}	EN = GND or V_{IN}	--	--	100	nA
Shutdown Supply Current	I_{GSD}	EN1 = EN2 = GND	--	0.01	2	μA
Thermal Shutdown Temperature	T_{SD}		--	140	--	°C
Thermal Shutdown Hysteresis	ΔT_{SD}		--	10	--	°C
Output Voltage Noise	e_{NO}	10Hz to 100kHz, C_{OUT} = 4.7μF, I_{LOAD} = 1mA	--	124	--	μV_{RMS}
Output Voltage AC PSRR		100Hz, C_{OUT} = 4.7μF, I_{LOAD} = 100mA	--	62	--	dB

Note 1. Stresses listed as the above "Absolute Maximum Ratings" may cause permanent damage to the device. These are for stress ratings. Functional operation of the device at these or any other conditions beyond those indicated in the operational sections of the specifications is not implied. Exposure to absolute maximum rating conditions for extended periods may remain possibility to affect device reliability.

Note 2. Devices are ESD sensitive. Handling precaution is recommended.

Note 3. The device is not guaranteed to function outside its operating conditions.

Note 4. The dropout voltage is defined as V_{IN} -V_{OUT}, which is measured when V_{OUT} is $V_{OUT(NORMAL)}$ – 100mV.

Note 5. θ_{JA} is measured in the natural convection at T_A = 25°C on a low effective thermal conductivity test board of JEDEC 51-3 thermal measurement standard.

Typical Operating Characteristics

Quiescent Current vs. Supply Voltage

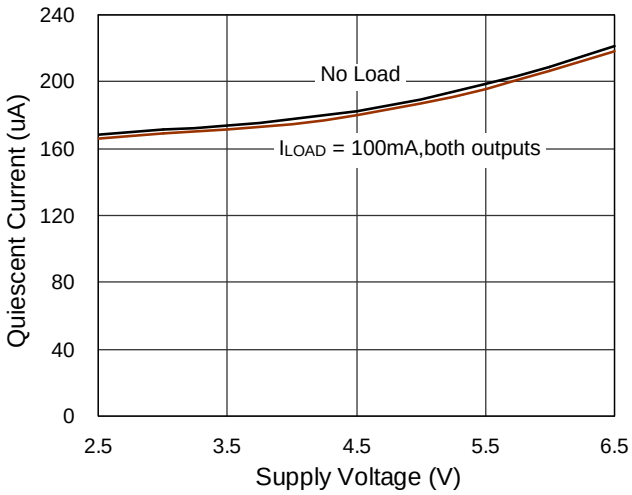

Output Voltage Accuracy vs. Temperature

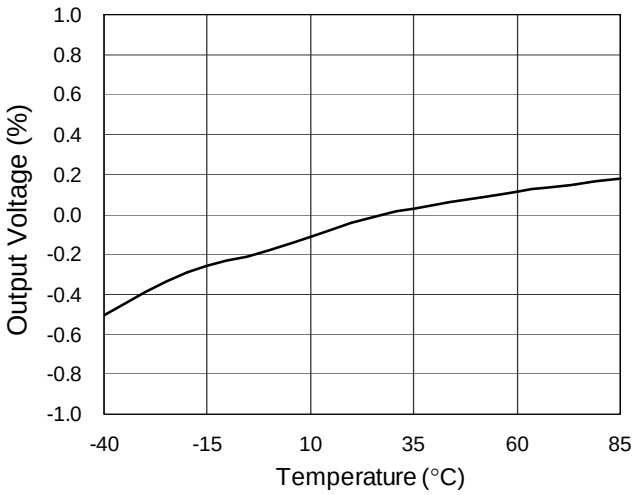

Quiescent Current vs. Load Current

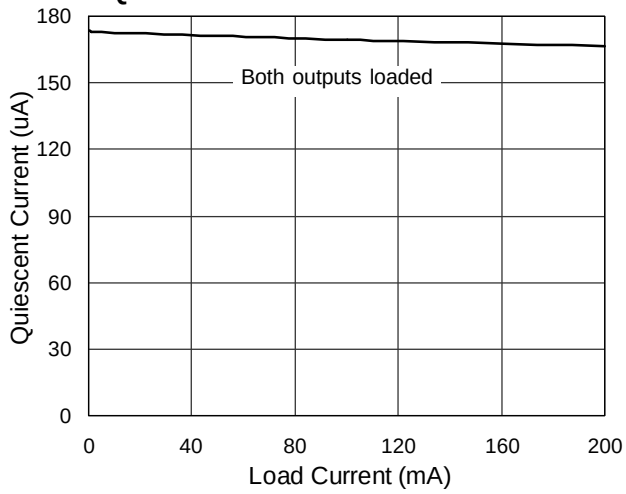

Dropout Voltage vs. Temperature

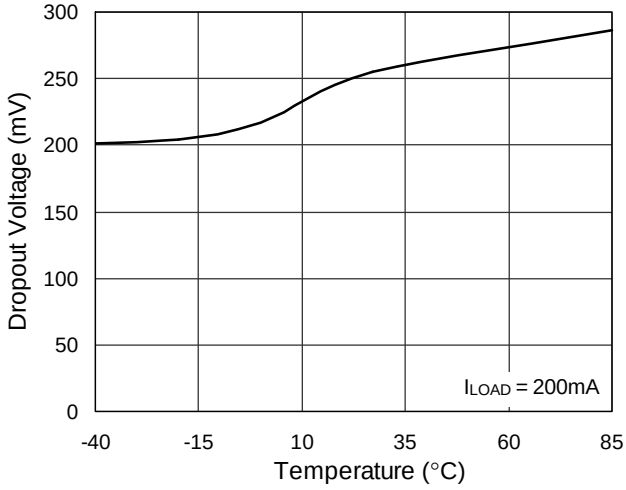

Quiescent Current vs. Temperature

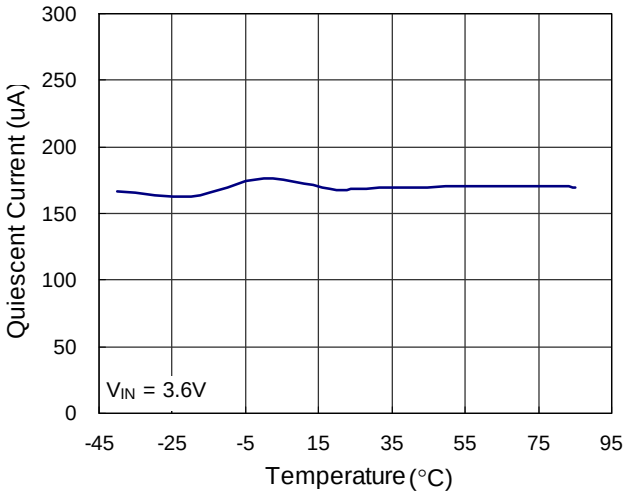

Channel-to-Channel Isolation vs. Frequency

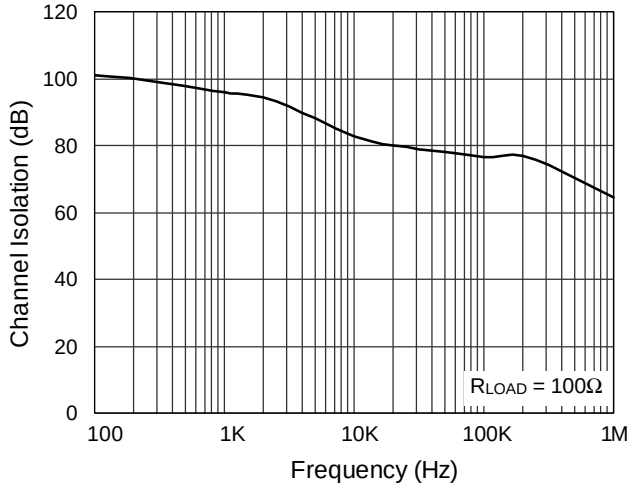

Line Transient Response

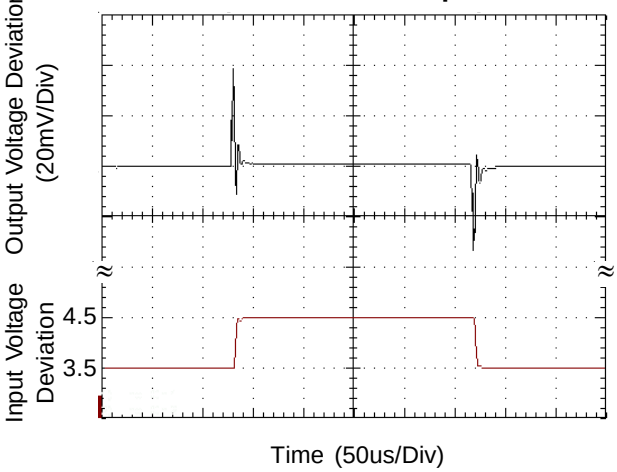

Load Transient Response

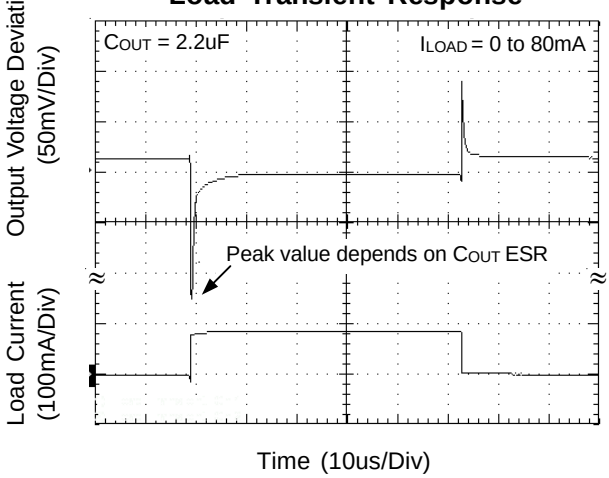

EN Pin Shutdown Response

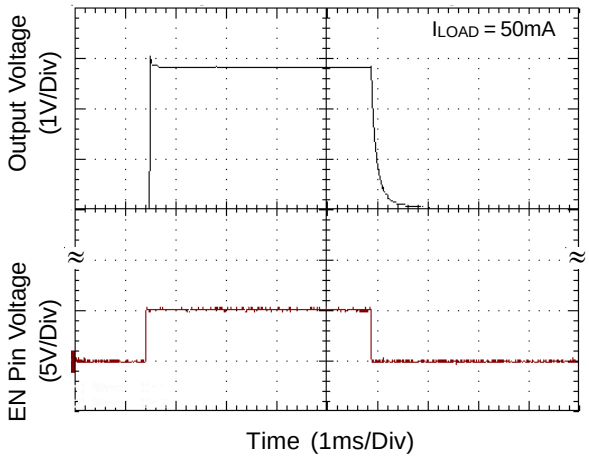

Noise

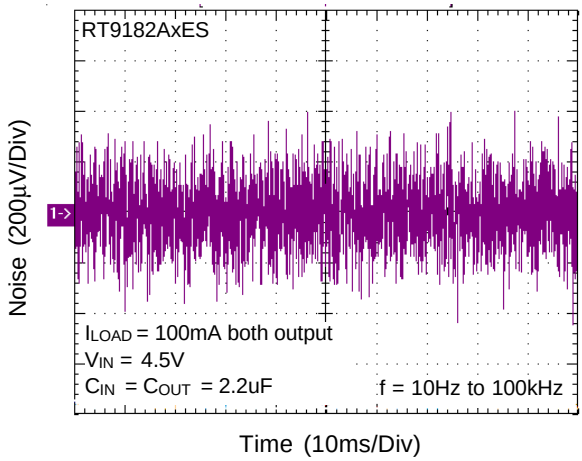

Noise

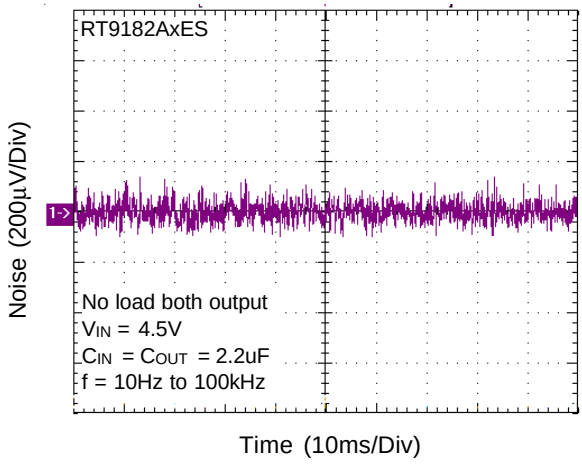

Applications Information

The RT9182 is integrated with two low noise, low dropout, and low quiescent current linear regulators designed primarily for battery-powered applications. Output voltages are optional ranging from 1.5V to 3.3V, and each channel can supply current up to 200mA.

Shutdown

The RT9182 is shutdown by pulling the EN input low, and turned on by driving the input high. If this feature is not to be used, the EN input should be tied to VIN to keep the regulator on at all times (the EN input must **not** be floating).

Internal P-Channel Pass Transistor

The RT9182 features double typical 1.5Ω P-Channel MOSFET pass transistors. It provides several advantages over similar designs using PNP pass transistors, including longer battery life. The P-Channel MOSFET requires no base drive, which reduces quiescent current considerably. PNP-based regulators waste considerable current in dropout when the pass transistor saturates. They also use high base-drive currents under large loads. The RT9182 does not suffer from these problems and consume only 165μA of quiescent current whether in dropout, light-load, or heavy-load applications.

Current Limit and Thermal Protection

The RT9182 includes two independent current limit structure which monitor and control each pass transistor's gate voltage limiting the guaranteed maximum output current to 200mA.

Thermal-overload protection limits total power dissipation in the RT9182. When the junction temperature exceeds T_J = +140°C, the thermal sensor signals the shutdown logic turning off the pass transistor and allowing the IC to cool. The thermal sensor will turn the pass transistor on again after the IC's junction temperature cools by 10°C, resulting in a pulsed output during continuous thermal-overload conditions. Thermal-overloaded protection is designed to protect the RT9182 in the event of fault conditions.

Do not exceed the absolute maximum junction temperature rating of T_J = + 125°C for continuous operation. The output can be shorted to ground for an indefinite amount of time without damaging the part by cooperation of current limit and thermal protection.

Operating Region and Power Dissipation

The maximum power dissipation of RT9182 depends on the thermal resistance of the case and circuit board, the temperature difference between the die junction and ambient air, and the rate of airflow. The power dissipation across the device is

$P = I_{OUT} (V_{IN} - V_{OUT})$.

The maximum power dissipation is :

$P_{(MAX)} = (T_J - T_A) / \theta_{JA}$

where $T_J - T_A$ is the temperature difference between the RT9182 die junction and the surrounding environment, θ_{JA} is the thermal resistance from the junction to the surrounding environment. The GND pin of the RT9182 performs the dual function of providing an electrical connection to ground and channeling heat away. Connect the GND pin to ground using a large pad or ground plane.

Capacitor Selection and Regulator Stability

Like any low-dropout regulator, the external capacitors used with the RT9182 must be carefully selected for regulator stability and performance.

Using a capacitor whose value is > 1uF on the RT9182 input and the amount of capacitance can be increased without limit. The input capacitor must be located a distance of not more than 0.5" from the input pin of the IC and returned to a clean analog ground. Any good quality ceramic or tantalum can be used for this capacitor. The capacitor with larger value and lower ESR (equivalent series resistance) provides better PSRR and line-transient response.

The output capacitor must meet both requirements for minimum amount of capacitance and ESR in all LDO applications (see Figure1). The RT9182 is designed specifically to work with low ESR ceramic output capacitor in space-saving and performance consideration. Using a ceramic capacitor whose value is at least 1uF with ESR is > 5mΩ on the RT9182 output ensures stability. The RT9182 still works well with output capacitor of other types due to the wide stable ESR range. Output capacitor

of larger capacitance can reduce noise and improve load-transient response, stability, and PSRR. The output capacitor should be located not more than 0.5" from the V_{OUT} pin of the RT9182 and returned to a clean analog ground.

Note that some ceramic dielectrics exhibit large capacitance and ESR variation with temperature. It may be necessary to use 2.2µF or more to ensure stability at temperatures below -10°C in this case. Also, tantalum capacitors, 2.2µF or more may be needed to maintain capacitance and ESR in the stable region for strict application environment.

Tantalum capacitors maybe suffer failure due to surge current when it is connected to a low-impedance source of power (like a battery or very large capacitor). If a tantalum capacitor is used at the input, it must be guaranteed to have a surge current rating sufficient for the application by the manufacture.

Load-Transient Considerations

The RT9182 load-transient response graphs show two components of the output response: a DC shift from the output impedance due to the load current change, and the transient response. The DC shift is quite small due to the excellent load regulation of the IC. Typical output voltage transient spike for a step change in the load current from 0mA to 50mA is tens mV, depending on the ESR of the output capacitor. Increasing the output capacitor's value and decreasing the ESR attenuates the overshoot.

Input-Output (Dropout) Voltage

A regulator's minimum input-output voltage differential (or dropout voltage) determines the lowest usable supply voltage. In battery-powered systems, this will determine the useful end-of-life battery voltage. Because the RT9182 uses a P-Channel MOSFET pass transistor, the dropout voltage is a function of drain-to-source on-resistance [$R_{DS(ON)}$] multiplied by the load current.

Reverse Current Path

The power transistor used in the RT9182 has an inherent diode connected between each regulator input and output (see Figure2). If the output is forced above the input by more than a diode-drop, this diode will become forward biased and current will flow from the V_{OUT} terminal to V_{IN}. This diode will also be turned on by abruptly stepping the input voltage to a value below the output voltage. To prevent regulator mis-operation, a Schottky diode could be used in the applications where input/output voltage conditions can cause the internal diode to be turned on (see Figure3). As shown, the Schottky diode is connected in parallel with the internal parasitic diode and prevents it from being turned on by limiting the voltage drop across it to about 0.3V < 100mA to prevent damage to the part.

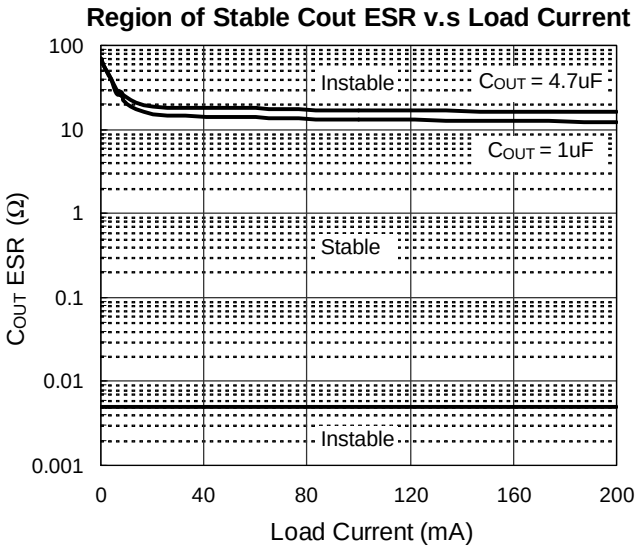

Figure 1

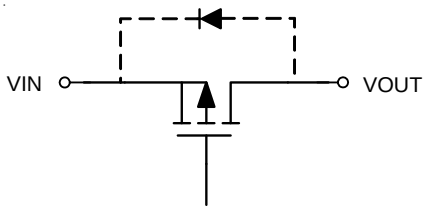

Figure 2

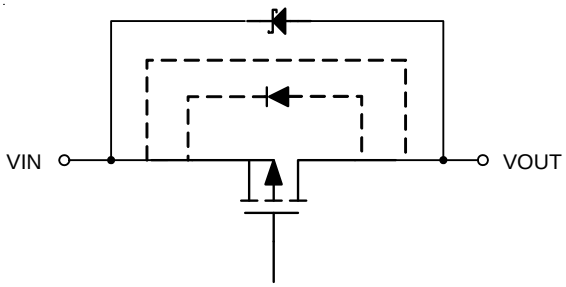

Figure 3

Outline Dimension

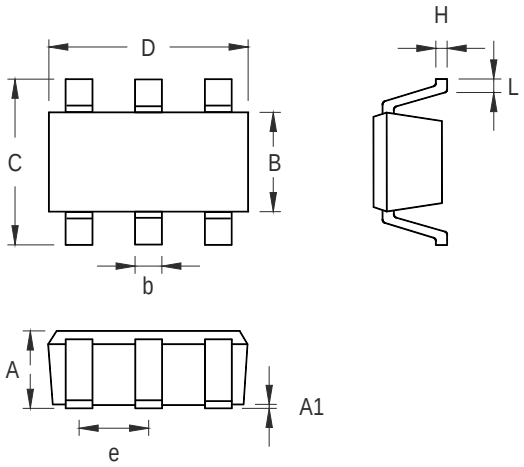

Symbol	Dimensions In Millimeters		Dimensions In Inches	
	Min	Max	Min	Max
A	0.889	1.295	0.031	0.051
A1	0.000	0.152	0.000	0.006
B	1.397	1.803	0.055	0.071
b	0.250	0.560	0.010	0.022
C	2.591	2.997	0.102	0.118
D	2.692	3.099	0.106	0.122
e	0.838	1.041	0.033	0.041
H	0.080	0.254	0.003	0.010
L	0.300	0.610	0.012	0.024

SOT-23-6 Surface Mount Package

Richtek Technology Corporation
Headquarter
5F, No. 20, Taiyuen Street, Chupei City
Hsinchu, Taiwan, R.O.C.
Tel: (8863)5526789 Fax: (8863)5526611

Richtek Technology Corporation
Taipei Office (Marketing)
8F, No. 137, Lane 235, Paochiao Road, Hsintien City
Taipei County, Taiwan, R.O.C.
Tel: (8862)89191466 Fax: (8862)89191465
Email: marketing@richtek.com