Triple Linear Regulator Controllers

General Description

The RT9174 is a triple linear regulator controller designed for motherboard application.

The regulators are intended to regulate the computer system AGP (2X/4X) power, the 2.5V clock power, and the 1.8V power for North/South Bridge core voltage and/or cache memory circuits. All controllers can drive NPN or NMOSFET pass transistor. A special scheme employing driver voltage could be higher than V_{DD} when driving NMOSFET through the 12V power.

The RT9174 future a small SOP-8 package for saving board area. It also builds in current limiting and thermal shutdown protection function.

Ordering Information

RT9174 □ □

- Package Type
  S : SOP-8
- Operating Temperature Range
  P : Pb Free with Commercial Standard
  G : Green (Halogen Free with Commercial Standard

Note :

RichTek Pb-free and Green products are :

- RoHS compliant and compatible with the current requirements of IPC/JEDEC J-STD-020.
- Suitable for use in SnPb or Pb-free soldering processes.
- 100%matte tin (Sn) plating.

Features

- **Integrated Three Linear Controllers in a SOP-8 Package**
- **Driving NPN or NMOSFET**
- **Sourcing (> 100mA) and Sinking (> 5mA) Driver**
- **Tri-State Output Driver**
- **Low Internal 0.8V Reference**
- **Adjustable Output Voltage Setting**
- **High Output Stability**
- **V_{DDQ} 1.5/3.3V Automatic Changing for AGP**
- **Wide 3V to 8V Input Voltage Range**
- **Current Limiting and Thermal Protection**
- **RoHS Compliant and 100% Lead (Pb)-Free**

Applications

- Mother Boards Power Supply
- Graphic Cards

Pin Configurations

(TOP VIEW)

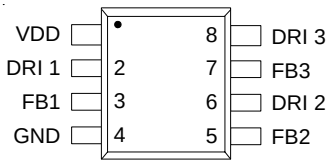

SOP-8

Function Block Diagram

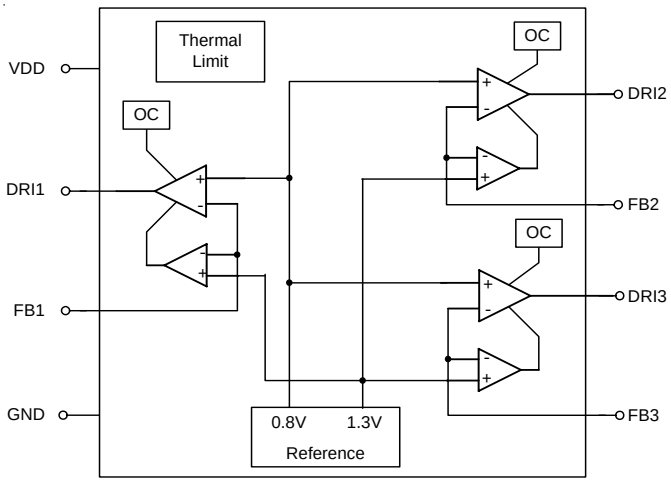

Typical Application Circuit

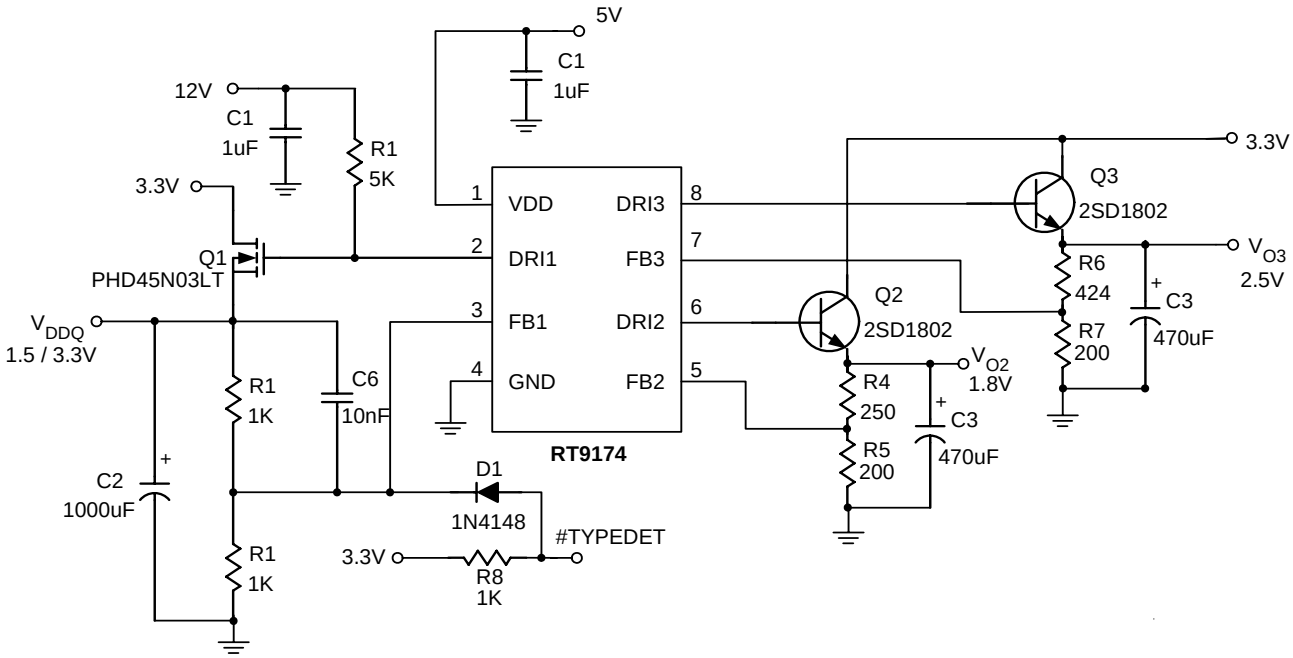

VDDQ = 3.3V if FB1>1.3V

#TYPEDET = 0V to VDDQ = 1.5V

#TYPEDET = Open to VDDQ = 3.3V

Figure 1. Triple LDOs with VDDQ for M/B Application

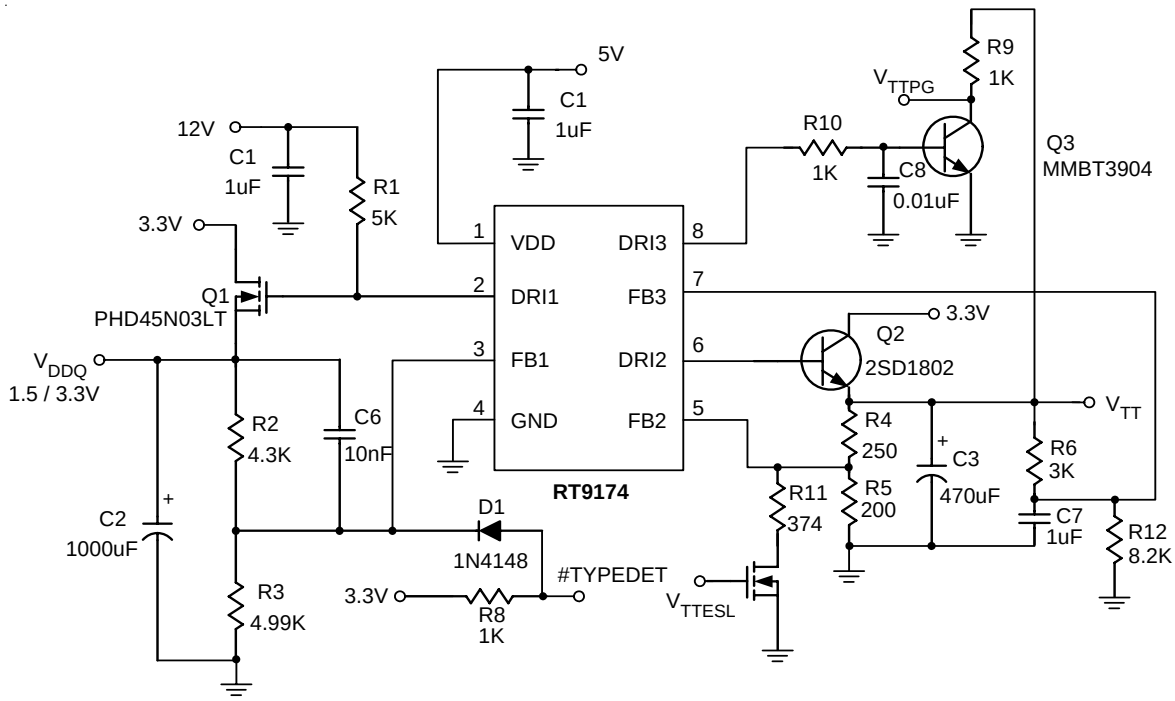

Figure 2. Dual LDOs with V_{TTPG} for VRM 8.5 Application

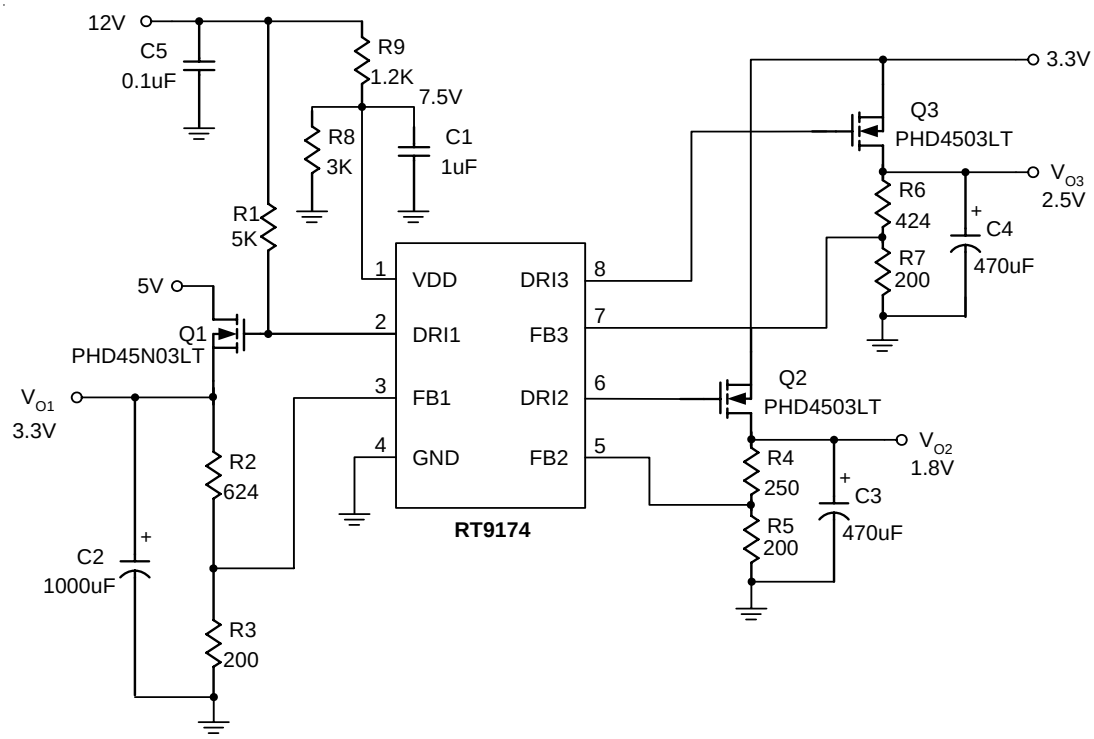

Figure 3. Triple LDOs Driving MOS Application

Functional Pin Description

Pin Name	Pin Function
VDD	Power Supply Input
DRI1	Regulator 1 Driver Output
FB1	Regulator 1 Feedback Non-inverting Input
GND	Power Ground
DRI2	Regulator 2 Driver Output
FB2	Regulator 2 Feedback Non-inverting Input
DRI3	Regulator 3 Driver Output
FB3	Regulator 3 Feedback Non-inverting Input

Absolute Maximum Ratings

- Input Voltage V_{DD} ---------- 8V
- Feedback FB1/FB2/FB3 ---------- –0.3 to 8V
- Driver DRI1/DRI2/DRI3 ---------- –0.3 to 12V
- Power Dissipation, P_D @ T_A = 25°C
  SOP-8 ---------- 0.625W
- Package Thermal Resistance
  SOP-8, θ_{JA} ---------- 160°C/W
- Operating Junction Temperature Range ---------- –40°C to 125°C
- Storage Temperature Range ---------- –65°C to 150°C

Electrical Characteristics

(V_{DD} = 5V, C_{IN} = 1F, T_A = 25°C, unless otherwise specified)

Parameter	Symbol	Test Conditions	Min	Typ	Max	Units
Supply Current	I_{DD}	No Load	--	0.8	2	mA
Feedback Reference Voltage	V_{REF}	No Load	0.78	0.8	0.82	V
Line Regulation	V_{LINE}	V_{DD} = 4 to 7V	--	2	10	mV
Load Regulation	V_{LOAD}	Source 100mA, DRI1/DRI2/DRI3 = 2.5V	--	5	10	mV
		Sink 5mA, DRI1/DRI2/DRI3 = 2.5V	--	10	15	
Driving Capability	I_O	Sourcing, DRI1/DRI2/DRI3 = 2.5V	100	--	--	mA
		Sink DRI1/DRI2/DRI3 = 2.5V	5	-	--	
Driver Current Limiting	I_{CL}	Sourcing, DRI1/DRI2/DRI3 = 2.5V	--	300	700	mA
		Sink DRI1/DRI2/DRI3 = 2.5V	--	40	150	
Driver Tri-State Threshold	V_{TS}	Sweep FB1/FB2/FB3 to Driver Output Off	1.0	1.35	2.0	V
Thermal Limit			--	150	--	°C
Power On Reset Voltage	POR		--	2.4	--	V

Typical Operating Characteristics

Reference vs Temperature

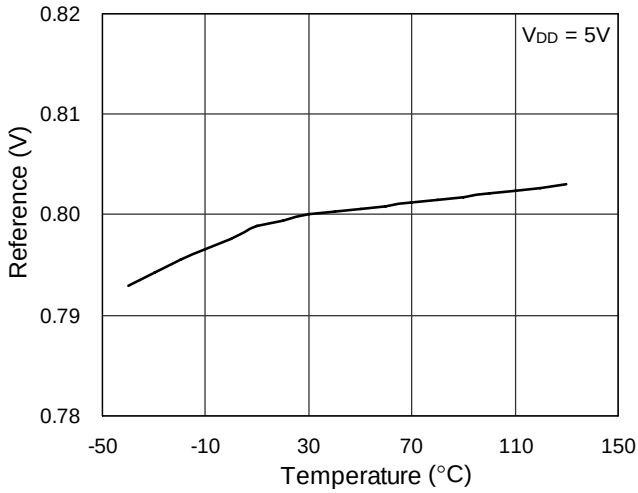

Driver Sourcing vs Drop Out

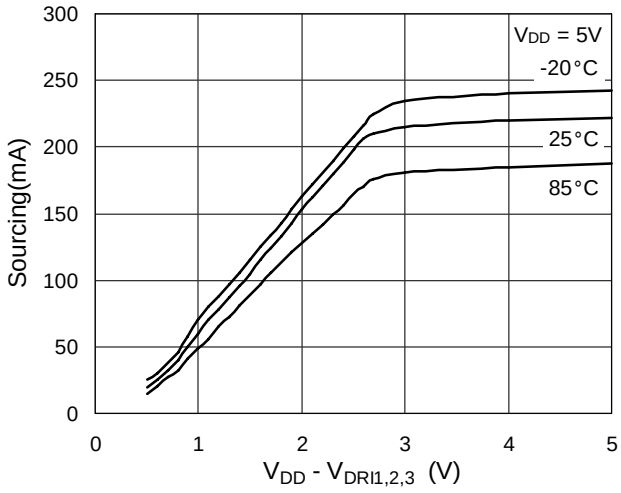

Supply Current vs Temperature

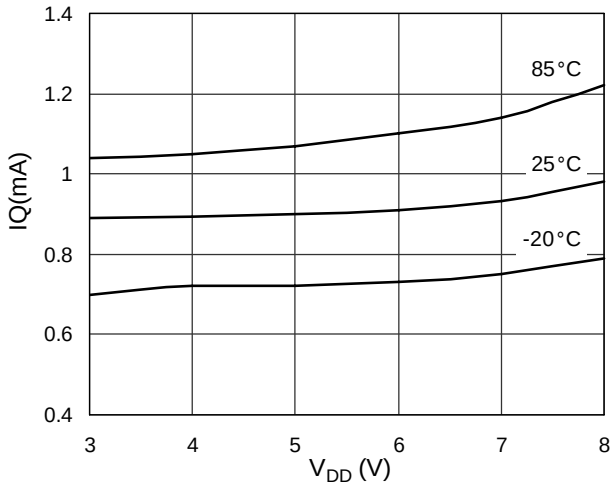

Driver Sinking vs V_{OUT}

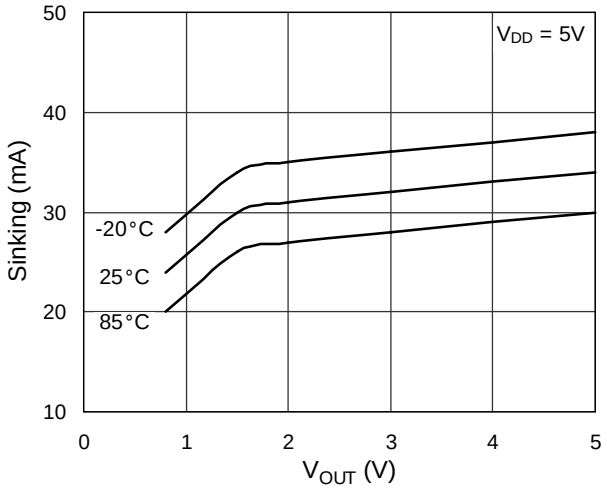

Tri-Sate Vth vs Temperature

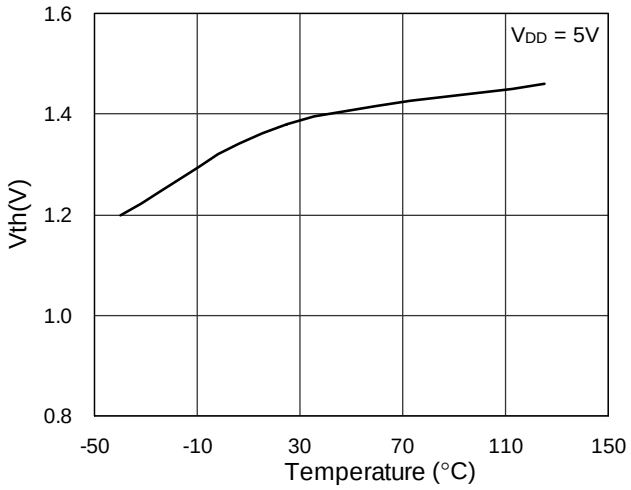

Short Current vs Temperature

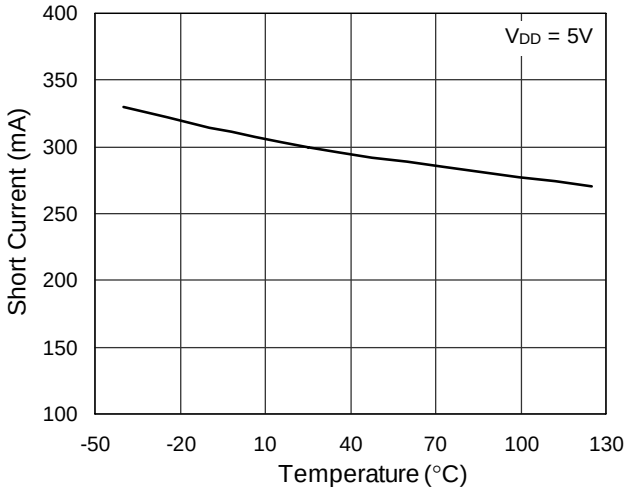

Application Information

Capacitors Selection

A 0.1µF minimum capacitor is recommended between V_{DD} and ground to increase stability. The linear controllers use dominant pole compensation integrated into the error amplifier and are sensitive to output capacitor selection. When driving external pass transistor, normally a minimum 470µF capacitor must be placed at output for stability and good transient response. When using internal pass transistor, just need 10µF capacitor for stable.

Pass Transistor Selection

The RT9174 are designed specifically to driver external NPN or NMOSFET pass transistor for up to 5A output current. The driver could deliver more 100mA when driving NPN transistor and sinking for a pull up resistor load when driving a NMOSFET.

Typically pass transistor with NPN hfe > 50 at Imax or NMOSFET Rds-on 100mΩ are suitable in most application.

Output Voltage Setting

The RT9174 develop a 0.8V reference voltage, especially suit for low voltage application. As shown in Figure 4, the output voltage could be easy set by R1 & R2 resistor. The divided resistor must keep below 1kΩ for quick response and stability.

Tri-state Operation

A special Tri-state design is empolyed in the RT9174 for AGP 2X/4X power supply. Typical application shown the detail circuit. In AGP 2X SELECT = open, FB1 will be pulled up over 1.3V through R_8 to trip the Tri-state threshold. R_8 has to meet the following relationship:

$R_8 < 0.75\ (V_{33} - 1.3) \times R_2$,

if $\frac{R3 + R2}{R3} \times 0.8 = 1.5$.

When in AGP 4X SELECT = GND, V_{DDQ} will work in normal 1.5V setting.

Layout Considerations

There are two critical layout considerations. One is the divider resistors should be located to RT9174 as possible to avoid inducing any noise. The second is C_{OUT} should be put at near the pass transistor to avoid oscillation.

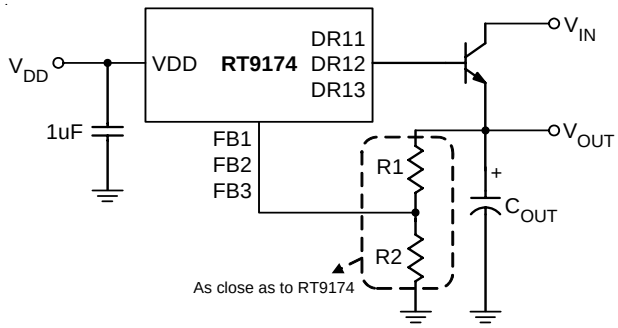

Figure 4

Outline Dimension

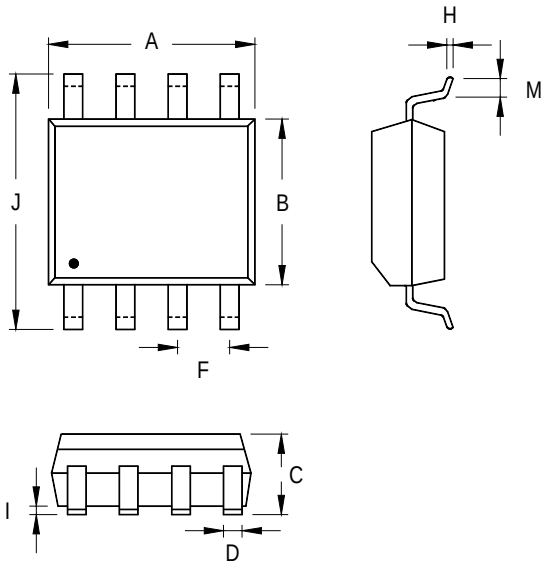

Symbol	Dimensions In Millimeters		Dimensions In Inches	
	Min	Max	Min	Max
A	4.801	5.004	0.189	0.197
B	3.810	3.988	0.150	0.157
C	1.346	1.753	0.053	0.069
D	0.330	0.508	0.013	0.020
F	1.194	1.346	0.047	0.053
H	0.170	0.254	0.007	0.010
I	0.050	0.254	0.002	0.010
J	5.791	6.200	0.228	0.244
M	0.400	1.270	0.016	0.050

8-Lead SOP Plastic Package

Richtek Technology Corporation
Headquarter
5F, No. 20, Taiyuen Street, Chupei City
Hsinchu, Taiwan, R.O.C.
Tel: (8863)5526789 Fax: (8863)5526611

Richtek Technology Corporation
Taipei Office (Marketing)
8F, No. 137, Lane 235, Paochiao Road, Hsintien City
Taipei County, Taiwan, R.O.C.
Tel: (8862)89191466 Fax: (8862)89191465
Email: marketing@richtek.com