43V Asynchronous Boost WLED Driver

General Description

The RT8511B is an LED driver IC that can support up to 10 WLED in series. It is composed of a current mode boost converter integrated with a 43V/2.2A power switch running at a fixed 500kHz frequency and covering a wide VIN range from 2.7V to 24V.

The white LED current is set with an external resistor, and the feedback voltage is regulated to 200mV (typ.). During operation, the LED current can be controlled by the PWM input signal in which the duty cycle determines the feedback reference voltage.

For brightness dimming, the RT8511B is able to maintain steady control of the LED current. Therefore, no audible noises are generated on the output capacitor. The RT8511B also has programmable over voltage pin to prevent the output from exceeding absolute maximum ratings during open LED conditions. The RT8511B is available in WDFN-8L 2x2 package.

Ordering Information

RT8511B □□

- Package Type
  QW : WDFN-8L 2x2 (W-Type)
- Lead Plating System
  G : Green (Halogen Free and Pb Free)

Note :

Richtek products are :

- RoHS compliant and compatible with the current requirements of IPC/JEDEC J-STD-020.
- Suitable for use in SnPb or Pb-free soldering processes.

Features

- **Wide Input Voltage Range : 2.7V to 24V**
- **High Output Voltage : up to 43V**
- **Direct PWM Dimming Control and Frequency from 100Hz to 8kHz**
- **Internal Soft-Start and Compensation**
- **200mV Reference Voltage**
- **PWM Dimming with Internal Filter**
- **Programmable Over Voltage Protection**
- **Over Temperature Protection**
- **Current Limit Protection**
- **Thin 8-Lead WDFN Package**
- **RoHS Compliant and Halogen Free**

Applications

- UMPC and Notebook Computer Backlight
- GPS, Portable DVD Backlight

Pin Configurations

(TOP VIEW)

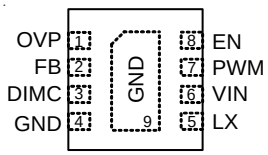

WDFN-8L 2x2

Marking Information

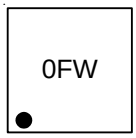

0F : Product Code

W : Date Code

Copyright ©2015 Richtek Technology Corporation. All rights reserved. RICHTEK is a registered trademark of Richtek Technology Corporation.

Typical Application Circuit

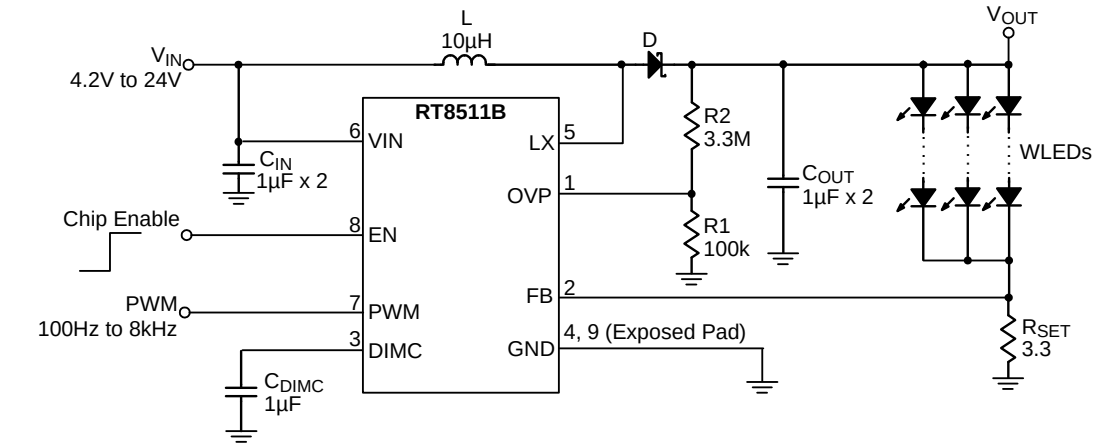

Figure 1. Typical Application Circuit of Normal Operation

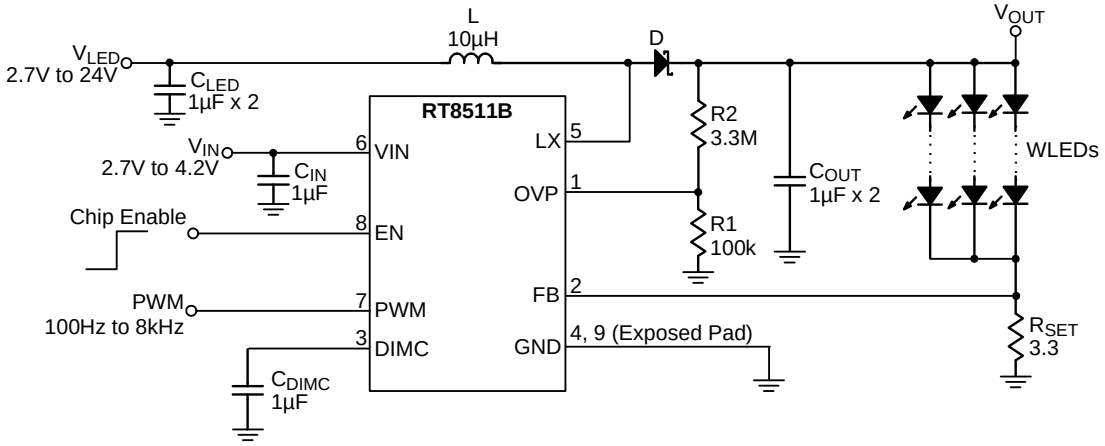

Figure 2. Typical Application Circuit of Low Voltage Operation

Functional Pin Description

Pin No.	Pin Name	Pin Function
1	OVP	Over Voltage Protection for Boost Converter. The detecting threshold is 1.2V.
2	FB	Feedback. Connect a resistor between this pin and GND to set the LED current.
3	DIMC	PWM Filter. Filter the PWM signal to a DC voltage.
4	GND	Ground.
5	LX	Switch Node for Boost Converter.
6	VIN	Power Supply Input.
7	PWM	Dimming Control Input.
8	EN	Chip Enable (Active High) for Boost Converter.
9 (Exposed Pad)	GND	The exposed pad must be soldered to a large PCB and connected to AGND for maximum power dissipation.

Copyright ©2015 Richtek Technology Corporation. All rights reserved. RICHTEK is a registered trademark of Richtek Technology Corporation.

Function Block Diagram

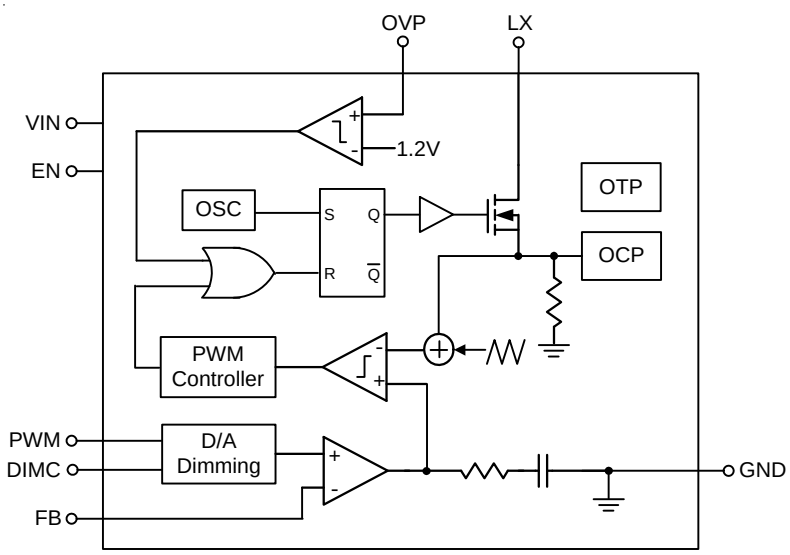

Copyright ©2015 Richtek Technology Corporation. All rights reserved. RICHTEK is a registered trademark of Richtek Technology Corporation.

Absolute Maximum Ratings (Note 1)

- VIN, EN, PWM, DIMC to GND ---------- –0.3V to 26.5V
- FB, OVP to GND ---------- –0.3V to 48V
- LX to GND ---------- –0.3V to 48V
  < 500ns ---------- –1V to 48V
- Power Dissipation, P_D @ T_A = 25°C
  WDFN-8L 2x2 ---------- 0.833W
- Package Thermal Resistance (Note 2)
  WDFN-8L 2x2, θ_{JA} ---------- 120°C/W
  WDFN-8L 2x2, θ_{JC} ---------- 8.2°C/W
- Lead Temperature (Soldering, 10 sec.) ---------- 260°C
- Junction Temperature ---------- 150°C
- Storage Temperature Range ---------- –65°C to 150°C
- ESD Susceptibility (Note 3)
  HBM (Human Body Model) ---------- 2kV
  MM (Machine Model) ---------- 200V

Recommended Operating Conditions (Note 4)

- Supply Input Voltage, V_{IN} ---------- 2.7V to 24V
- Junction Temperature Range ---------- –40°C to 125°C
- Ambient Temperature Range ---------- –40°C to 85°C

Electrical Characteristics

(V_{IN} = 4.5V, T_A = 25°C, unless otherwise specified)

Parameter		Symbol	Test Conditions	Min	Typ	Max	Unit
VIN Quiescent Current		I_Q	V_{FB} = 1.5V, No Switching	--	725	--	μA
		I_{Q_SW}	V_{FB} = 0V, Switching	--	--	2.2	mA
VIN Shutdown Current		I_{SHDN}	V_{IN} = 4.5V, V_{EN} = 0V	--	1	4	μA
Control Input							
EN, PWM Threshold Voltage	Logic-High	V_{IH}	V_{IN} = 2.7V to 24V	1.6	--	--	V
	Logic-Low	V_{IL}	V_{IN} = 2.7V to 24V	--	--	0.8	
EN Sink Current		I_{IH}	V_{EN} = 3V	1	--	10	μA
Shutdown Delay		t_{SHDN}	EN high to low	52	64	80	ms
PWM Dimming Frequency				0.1	--	8	kHz
Boost Converter							
Switching Frequency		f_{OSC}	V_{IN} = 2.7V to 24V	0.4	0.5	0.6	MHz
LX On Resistance (N-MOSFET)		$R_{DS(ON)}$	V_{IN} > 5V	--	0.4	0.6	Ω
Minimum ON Time				--	60	--	ns
Maximum Duty Cycle		D_{MAX}	V_{FB} = 0V, Switching	--	92	--	%

Copyright ©2015 Richtek Technology Corporation. All rights reserved. RICHTEK is a registered trademark of Richtek Technology Corporation.

Parameter	Symbol	Test Conditions	Min	Typ	Max	Unit
LED Current						
Minimum PWM Dimming Duty Cycle	D_{MIN}	Dimming Freq. = 100Hz to 8kHz	1	--	--	%
Feedback Voltage	V_{FB}		195	200	205	mV
Fault Protection						
LX Current Limit	I_{LIM}		1.66	2.2	2.74	A
Over Voltage Protection Threshold	V_{OVP}		1.14	1.2	1.26	V
Thermal Shutdown Temperature	T_{SD}		--	160	--	°C
Thermal Shutdown Hysteresis	ΔT_{SD}		--	30	--	°C

Note 1. Stresses beyond those listed “Absolute Maximum Ratings” may cause permanent damage to the device. These are stress ratings only, and functional operation of the device at these or any other conditions beyond those indicated in the operational sections of the specifications is not implied. Exposure to absolute maximum rating conditions may affect device reliability.

Note 2. θ_{JA} is measured at T_A = 25°C on a high effective thermal conductivity four-layer test board per JEDEC 51-7. θ_{JC} is measured at the exposed pad of the package.

Note 3. Devices are ESD sensitive. Handling precaution is recommended.

Note 4. The device is not guaranteed to function outside its operating conditions.

Copyright ©2015 Richtek Technology Corporation. All rights reserved. RICHTEK is a registered trademark of Richtek Technology Corporation.

Typical Operating Characteristics

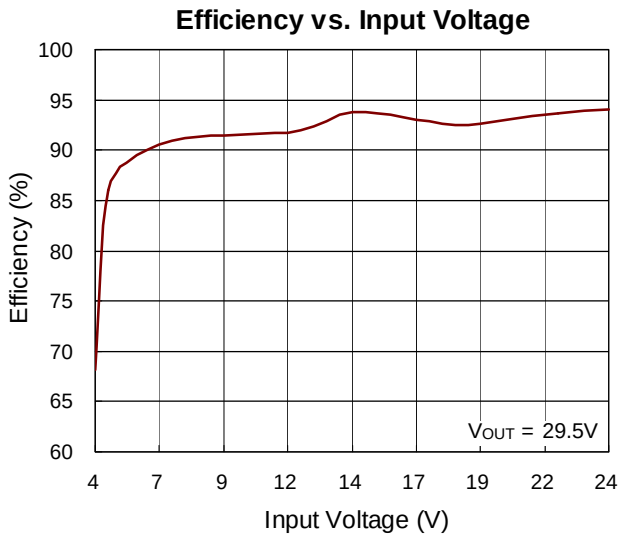

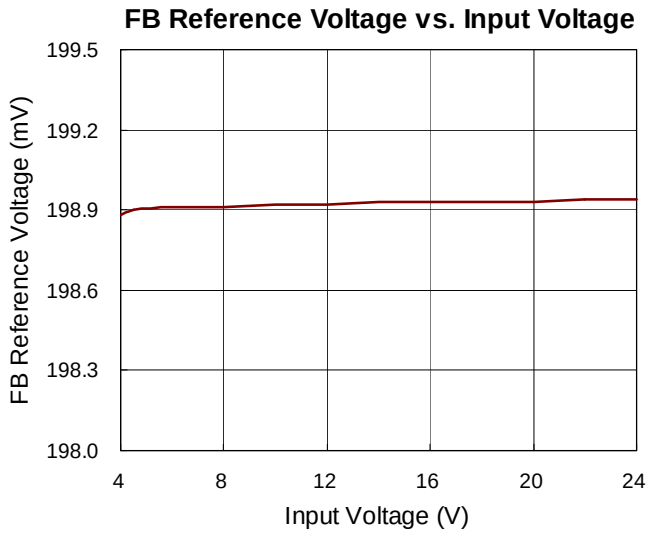

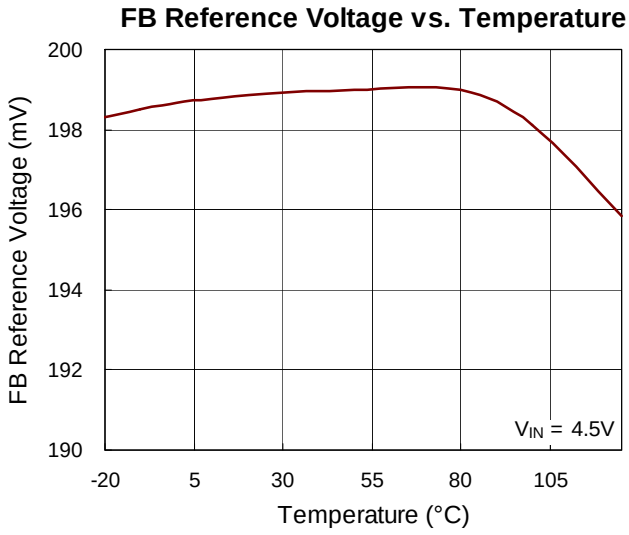

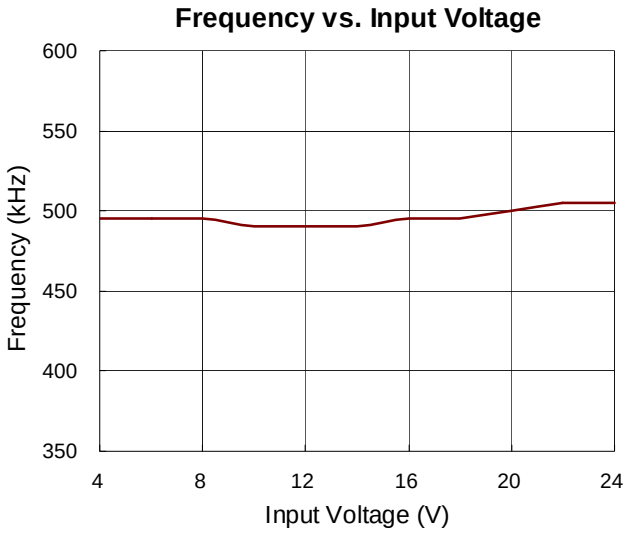

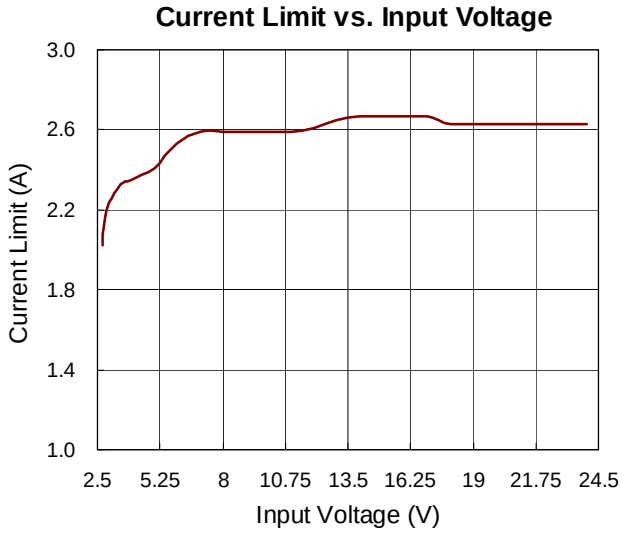

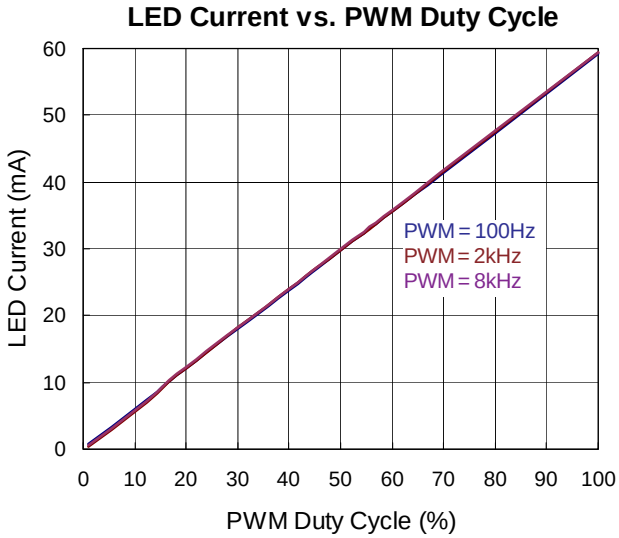

Copyright ©2015 Richtek Technology Corporation. All rights reserved. RICHTEK is a registered trademark of Richtek Technology Corporation.

Application Information

The RT8511B is a current mode boost converter which operates at a fixed frequency of 500kHz. It is capable of driving up to 10 white LEDs in series and integrates functions such as soft-start, compensation, and internal analog dimming control. The protection block also provides over-voltage, over-temperature, and current- limit protection features.

LED Current Setting

The loop structure of the boost converter keeps the FB pin voltage equal to the reference voltage V_{FB}. Therefore, by connecting the resistor, R_{SET} between the FB pin and GND, the LED current will be determined by the current through R_{SET}. The LED current can be calculated by the following equation :

$$I_{LED} = \frac{V_{FB}}{R_{SET}}$$

Brightness Control

For the brightness dimming control of the RT8511B, the IC provides typically 200mV reference voltage when the PWM pin is constantly pulled high. However, the PWM pin allows a PWM signal to adjust the reference voltage by changing the PWM duty cycle to achieve LED brightness dimming control. The relationship between the duty cycle and the FB voltage can be calculated according to the following equation :

V_{FB} = 200mV x Duty

where 200mV is the typical internal reference voltage and Duty is the duty cycle of the PWM signal.

As shown in Figure 3, the duty cycle of the PWM signal is used to modify the internal 200mV reference voltage. With an on-chip output clamping amplifier and a serial resistor, the PWM dimming signal is easily low-pass filtered to an analog dimming signal with one external capacitor, C_{DIMC}, for noise-free PWM dimming. Dimming frequency can be sufficiently adjusted from 100Hz to 8kHz. However, the LED current cannot be 100% proportional to the duty cycle. Referring to Table 1, the minimum dimming duty can be as low as 1% for the frequency range from 100Hz to 8kHz. It should be noted that the accuracy of 1% duty is not guaranteed.

Because the voltage of DIMC and FB is small to 2mV and easily affected by LX switching noise.

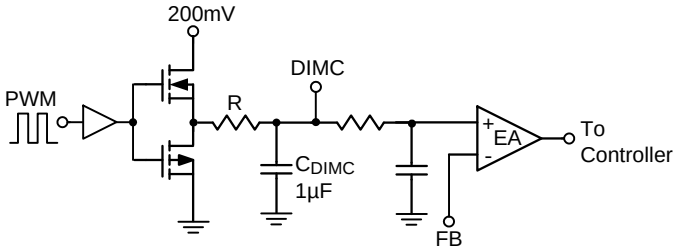

Figure 3. Block Diagram of Programmable FB Voltage

Table 1. Minimum Duty for Dimming Frequency

Dimming Frequency	Minimum Duty Cycle
100Hz to 8kHz	1%

The FB pin voltage will be decreased by lower PWM duty ratio . That will achieve LED current diming function for different brightness. But LED current is more accurate when higher PWM duty. The Table 2. shows typical variation value comparison between different PWM duty and condition is V_{IN} = 3.7V, LED array = 6S2P, R_{SET} = 5Ω.

Table 2. LED Current Variation vs PWM Duty

PWM Duty (%)	Variation (%)	PWM Duty (%)	Variation (%)
1	±60	8	±7
2	±25	9	±6
3	±17	10	±5
4	±13	20	±4
5	±10	50	±3
6	±9	100	±2.5
7	±8		

It also should be noted that when the input voltage is too close to the output voltage [(V_{OUT} –V_{IN}) < 6V] , excessive audible noise may occur. Additionally, for accurate brightness dimming control, the input voltage should be kept lower than the LEDs' turn on voltage. When operating in the light load, excessive output ripple may occur.

Copyright ©2015 Richtek Technology Corporation. All rights reserved. RICHTEK is a registered trademark of Richtek Technology Corporation.

Soft-Start

The RT8511B provides a built-in soft-start function to limit the inrush current, while allowing for an increased PWM frequency for dimming.

Current Limiting Protection

The RT8511B can limit the peak current to achieve over current protection. The IC senses the inductor current through the LX pin in the charging period. When the value exceeds the current limiting threshold, the internal N-MOSFET will be turned off. In the off period, the inductor current will descend. The internal MOSFET is turned on by the oscillator during the beginning of the next cycle.

Power Sequence

In order to assure that the normal soft-start function is in place for suppressing the inrush current, the input voltage and enable voltage should be ready before PWM pulls high. Figure 4 and Figure 5 show the power on and power off sequences.

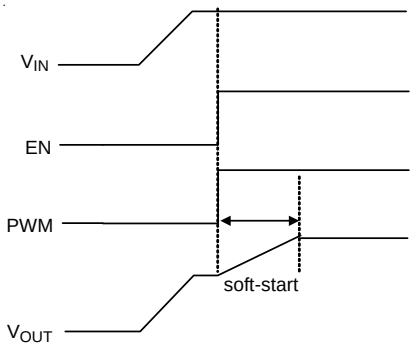

Mode1

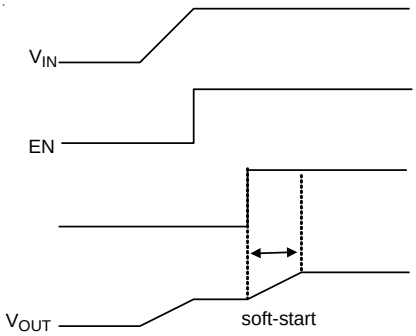

Mode2

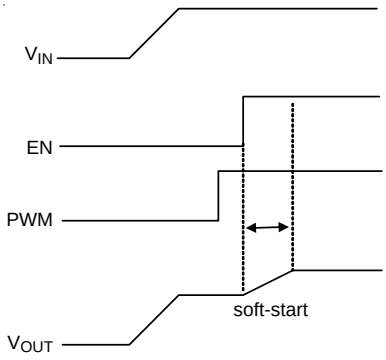

Mode3

Figure 4. Power On Sequence

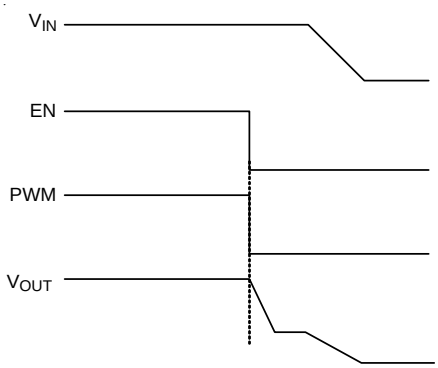

Mode1

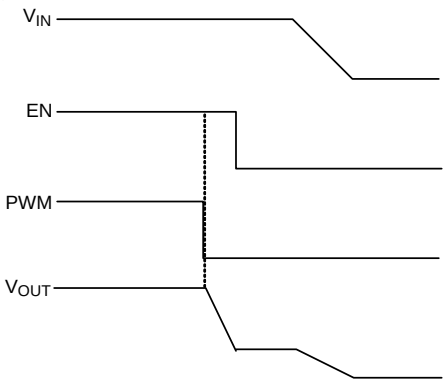

Mode2

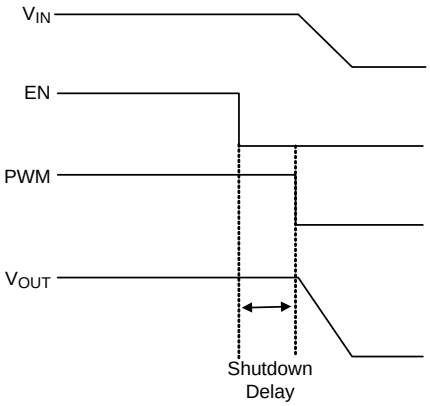

Mode3

Figure 5. Power Off Sequence

Copyright ©2015 Richtek Technology Corporation. All rights reserved. RICHTEK is a registered trademark of Richtek Technology Corporation.

Over Voltage Protection

The RT8511B equips Over Voltage Protection (OVP) function. When the voltage at the OVP pin reaches a threshold of approximately 1.2V, the MOSFET drive output will turn off. The MOSFET drive output will turn on again once the voltage at the OVP pin drops below the threshold. Thus, the output voltage can be clamped at a certain voltage level, as shown in the following equation :

$$V_{OUT,\,OVP} = V_{OVP} \times \left(1 + \frac{R2}{R1}\right)$$

where R1 and R2 make up the voltage divider connected to the OVP pin.

Over Temperature Protection

The RT8511B has an Over Temperature Protection (OTP) function to prevent overheating caused by excessive power dissipation from overheating the device. The OTP will shut down switching operation if the junction temperature exceeds 160°C. The boost converter will start switching again when the junction temperature is cooled down by approximately 30°C.

Inductor Selection

The inductance depends on the maximum input current. As a general rule, the inductor ripple current range is 20% to 40% of the maximum input current. If 40% is selected as an example, the inductor ripple current can be calculated according to the following equation :

$$I_{IN(MAX)} = \frac{V_{OUT} \times I_{OUT}}{\eta_{(MIN)} \times V_{IN(MIN)}}$$

$$I_{RIPPLE} = 0.4 \times I_{IN(MAX)}$$

where η is the efficiency of the boost converter, $I_{IN(MAX)}$ is the maximum input current, I_{OUT} is the total current from all LED strings, and I_{RIPPLE} is the inductor ripple current. The input peak current can be calculated by maximum input current plus half of inductor ripple current shown as following equation :

$$I_{PEAK} = 1.2 \times I_{IN(MAX)}$$

Note that the saturated current of the inductor must be greater than I_{PEAK}. The inductance can eventually be determined according to the following equation :

$$L = \frac{\eta \times (V_{IN})^2 \times (V_{OUT} - V_{IN})}{0.4 \times (V_{OUT})^2 \times I_{OUT} \times f_{OSC}}$$

where f_{OSC} is the switching frequency. For better efficiency, it is suggested to choose an inductor with small series resistance.

Diode Selection

The Schottky diode is a good choice for an asynchronous boost converter due to its small forward voltage. However, when selecting a Schottky diode, important parameters such as power dissipation, reverse voltage rating, and pulsating peak current must all be taken into consideration. A suitable Schottky diode's reverse voltage rating must be greater than the maximum output voltage, and its average current rating must exceed the average output current.

Capacitor Selection

Two 1μF ceramic input capacitors and two 1μF ceramic output capacitors are recommended for driving 10 WLEDs in series. For better voltage filtering, ceramic capacitors with low ESR are recommended. Note that the X5R and X7R types are suitable because of their wide voltage and temperature ranges.

Thermal Considerations

For continuous operation, do not exceed absolute maximum junction temperature. The maximum power dissipation depends on the thermal resistance of the IC package, PCB layout, rate of surrounding airflow, and difference between junction and ambient temperature. The maximum power dissipation can be calculated by the following formula :

$$P_{D(MAX)} = (T_{J(MAX)} - T_A) / \theta_{JA}$$

where $T_{J(MAX)}$ is the maximum junction temperature, T_A is the ambient temperature, and θ_{JA} is the junction to ambient thermal resistance.

For recommended operating condition specifications, the maximum junction temperature is 125°C. The junction to ambient thermal resistance, θ_{JA}, is layout dependent. For WDFN-8L 2x2 package, the thermal resistance, θ_{JA}, is 120°C/W on a standard JEDEC 51-7 four-layer thermal test board. The maximum power dissipation at T_A = 25°C can be calculated by the following formulas :

Copyright ©2015 Richtek Technology Corporation. All rights reserved. RICHTEK is a registered trademark of Richtek Technology Corporation.

$P_{D(MAX)}$ = (125°C – 25°C) / (120°C/W) = 0.833W for WDFN-8L 2X2 package

The maximum power dissipation depends on operating ambient temperature for fixed $T_{J(MAX)}$ and thermal resistance, θ_{JA}. The derating curves in Figure 6 allow the designer to see the effect of rising ambient temperature on the maximum power dissipation.

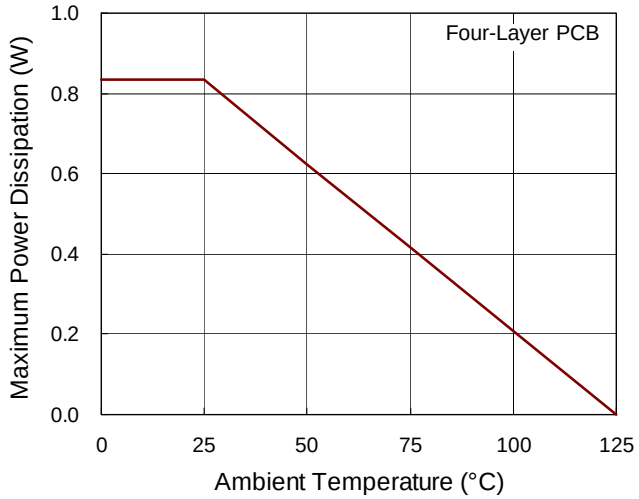

Figure 6. Derating Curve of Maximum Power Dissipation

Layout Consideration

For high frequency switching power supplies, the PCB layout is important to obtain good regulation, high efficiency and stability. The following descriptions are the suggestions for better PCB layout.

- Input and output capacitors should be placed close to the IC and connected to the ground plane to reduce noise coupling.
- The GND and Exposed Pad should be connected to a strong ground plane for heat sinking and noise protection.
- The components L, D, C_{IN} and C_{OUT} must be placed as close as possible to reduce current loop. Keep the main current traces as possible as short and wide.
- The LX node of the DC/DC converter experiences is with high frequency voltage swings. It should be kept in a small area.
- The component R_{SET} should be placed as close as possible to the IC and kept away from noisy devices.

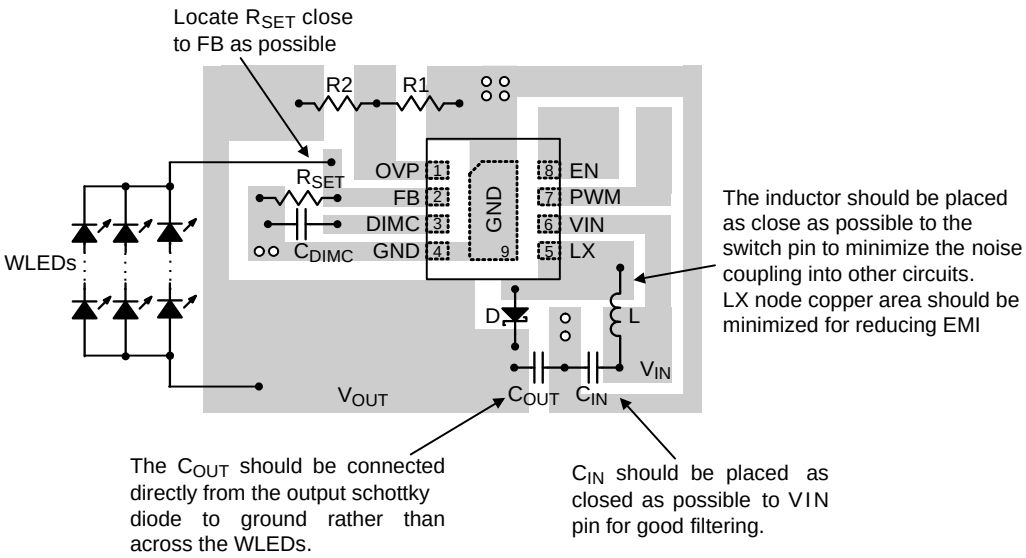

Figure 7. PCB Layout Guide

Copyright ©2015 Richtek Technology Corporation. All rights reserved. RICHTEK is a registered trademark of Richtek Technology Corporation.

Outline Dimension

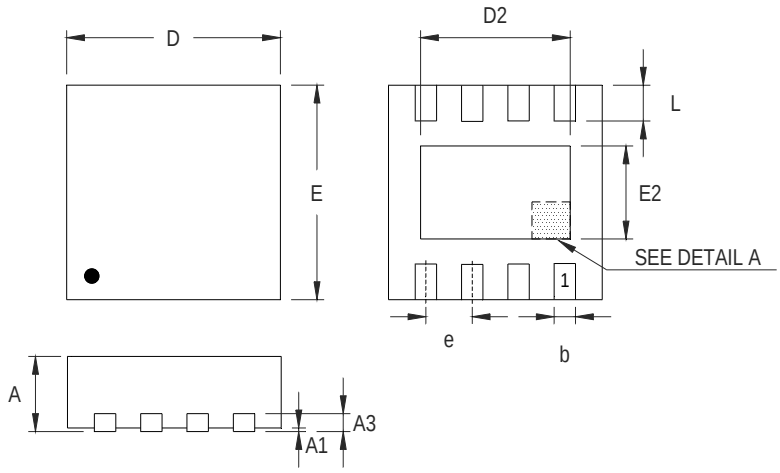

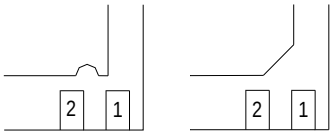

DETAIL A

Pin #1 ID and Tie Bar Mark Options

Note : The configuration of the Pin #1 identifier is optional, but must be located within the zone indicated.

Symbol	Dimensions In Millimeters		Dimensions In Inches	
	Min	Max	Min	Max
A	0.700	0.800	0.028	0.031
A1	0.000	0.050	0.000	0.002
A3	0.175	0.250	0.007	0.010
b	0.200	0.300	0.008	0.012
D	1.950	2.050	0.077	0.081
D2	1.000	1.250	0.039	0.049
E	1.950	2.050	0.077	0.081
E2	0.400	0.650	0.016	0.026
e	0.500		0.020	
L	0.300	0.400	0.012	0.016

W-Type 8L DFN 2x2 Package

Richtek Technology Corporation

14F, No. 8, Tai Yuen 1st Street, Chupei City

Hsinchu, Taiwan, R.O.C.

Tel: (8863)5526789

Richtek products are sold by description only. Richtek reserves the right to change the circuitry and/or specifications without notice at any time. Customers should obtain the latest relevant information and data sheets before placing orders and should verify that such information is current and complete. Richtek cannot assume responsibility for use of any circuitry other than circuitry entirely embodied in a Richtek product. Information furnished by Richtek is believed to be accurate and reliable. However, no responsibility is assumed by Richtek or its subsidiaries for its use; nor for any infringements of patents or other rights of third parties which may result from its use. No license is granted by implication or otherwise under any patent or patent rights of Richtek or its subsidiaries.