Innovative Service Around the Globe YAGEO

DATA SHEET

THIN FILM CHIP RESISTORS

High precision - high stability

RT series

0.01% TO 1%, TCR 5 TO 50

sizes 0201/0402/0603/0805/1206/ 1210/2010/2512

RoHS compliant



YAGEO Phycomp

Product specification – April 21, 2020 V.12

SCOPE

This specification describes RT series high precision - high stability chip resistors with lead-free terminations made by thin film process.

APPLICATIONS

- Converters
- Printing equipment
- Server board
- Telecom
- Consumer

FEATURES

- Halogen Free Epoxy
- RoHS compliant
- Reducing environmentally hazardous wastes
- High component and equipment reliability
- Saving of PCB space
- None forbidden-materials used in products/production

ORDERING INFORMATION - GLOBAL PART NUMBER & I2NC

Both part numbers are identified by the series, size, tolerance, packing type, temperature coefficient, taping reel and resistance value.

YAGEO BRAND ordering code

GLOBAL PART NUMBER (PREFERRED)

RT	XXXX	F	X	X	XX	XXXX	L
	(1)	(2)	(3)	(4)	(5)	(6)	(7)

(1) SIZE

0201/ 0402 / 0603 / 0805 / 1206 / 1210 / 2010 / 2512

(2) TOLERANCE

L = ±0.01%
P = ±0.02%
W= ±0.05%
B = ±0.1%
C = ±0.25%
D = ±0.5%
F = ±1%

(3) PACKAGING TYPE

R = Paper/PE taping reel K = Embossed taping reel

(4) TEMPERATURE COEFFICIENT OF RESISTANCE

A = 5 ppm/°C
B = 10 ppm/°C
C = 15 ppm/°C
D = 25 ppm/°C
E = 50 ppm/°C

(5) TAPING REEL

07 = 7 inch dia. Reel 10 = 10 inch dia. Reel 13 = 13 inch dia. Reel
7W= 7 inch dia. Reel with high power (1W for 2512)

(6) RESISTANCE VALUE

There are 2~4 digits indicated the resistor value. Letter R/K/M is decimal point.
Detailed resistance rules show in table of "Resistance rule of global part number".

(7) DEFAULT CODE

Letter L is system default code for order only (Note)

Resistance rule of global part number

Resistance code rule	Example
XRXX (1 to 9.76 Ω)	1R = 1 Ω 1R5 = 1.5 Ω 9R76 = 9.76 Ω
XXRX (10 to 97.6 Ω)	10R = 10 Ω 97R6 = 97.6 Ω
XXXR (100 to 976 Ω)	100R = 100 Ω
XKXX (1 to 9.76 KΩ)	1K = 1,000 Ω 9K76 = 9760 Ω
XMXX (1 to 9.76 MΩ)	1M = 1,000,000 Ω 9M76= 9,760,000 Ω

ORDERING EXAMPLE

The ordering code of a RT0603 chip resistor, TC 50 value 56 Ω with ±0.5% tolerance, supplied in 7-inch tape reel is: RT0603DRE0756RL.

NOTE

1. All our RSMD products meet RoHS compliant and Halogen Free. "LFP" of the internal 2D reel label mentions "Lead Free Process"
2. On customized label, "LFP" or specific symbol can be printed

PHYCOMP BRAND ordering codes

Both GLOBAL PART NUMBER (preferred) and 12NC (traditional) codes are acceptable to order Phycomp brand products. For matching traditional types with size codes, please refer to "Comparison table of traditional types and sizes".

GLOBAL PART NUMBER (PREFERRED)

For detailed information of GLOBAL PART NUMBER and ordering example, please refer to page 2.

12NC CODE

2390	X	XX	X	XXXX	L
(1)	(2)	(3)	(4)	(5)	(6)

START WITH (1)	TCR (2) (ppm/°C)	PACKING CODE BY SIZE (inch) (3)	TOL. (4) (%)	RESISTANCE RANGE	DEFAULT CODE (NOTE)
2390	8 = ±10	0402: 07 = 7" reel	7 = ±1	The remaining 4 digits represent the resistance value with the last digit indicating the multiplier as shown in the table of "Last digit of 12NC".	Letter L is system default code for order only (Note)
	7 = ±15	47 = 13" reel	6 = ±0.5		
	6 = ±25	0603: 04 = 7" reel	5 = ±0.25		
	4 = ±50	24 = 10" reel	4 = ±0.1		
		44 = 13" reel	3 = ±0.05		
		0805: 01 = 7" reel		0402: 4.7Ω ≤ R ≤ 240KΩ	
		41 = 13" reel		0603: 1 Ω ≤ R ≤ 1MΩ	
		1206: 11 = 7" reel		0805: 1Ω ≤ R ≤ 1.5 MΩ	
		51 = 13" reel		1206: 1Ω ≤ R ≤ 1.5 MΩ	
		1210: 12 = 7" reel		1210: 4.7Ω ≤ R ≤ 1 MΩ	
		52 = 13" reel		2010: 4.7Ω ≤ R ≤ 1 MΩ	
		2010: 15 = 7" reel		2512: 4.7Ω ≤ R ≤ 1 MΩ	
		2512: 18 = 7" reel			

Comparison table of traditional types and sizes

TF (1)	X (2)	X (3)	X (4)
START WITH	SIZE CODE	TCR (ppm/°C)	TOL. (%)
TF	3 = 0402	4 = ±10	0 = ±1
	2 = 0603	3 = ±15	1 = ±0.5
	1 = 0805	1 = ±25	2 = ±0.25
	0 = 1206	2 = ±50	3 = ±0.1
	5 = 1210		4 = ±0.05
	7 = 2010		
	6 = 2512		

Example:

TF321 = RT0402, TC50, ±0.5% tolerance

Resistance decade (3)	Last digit
1 to 9.76 Ω	8
10 to 97.6 Ω	9
100 to 976 Ω	1
1 to 9.76 kΩ	2
10 to 97.6 kΩ	3
100 to 976 kΩ	4
1 to 9.76 MΩ	5
10 to 97.6 MΩ	6

Example: 1 Ω = 1008 or 108
33 kΩ = 3303 or 333
10 MΩ = 1006 or 106

Exceptions to above packing code definitions:

0805 TC50 with 1%, supplied in 13" reel, the packing code is 02.

0603 TC50 with 1%, supplied in 13" reel, the packing code is 03.

2512 TC15, in 7" reel, the packing code is 35.

2010 TC15, in 7" reel, the packing code is 31.

ORDERING EXAMPLE

The ordering code of a TF221 resistor, TC50, value 56 Ω , with ±0.5% tolerance, supplied in tape of 5,000 units per reel is: 239040465609L or RT0603DRE0756RL.

NOTE

1. All our RSMD products meet RoHS compliant and Halogen Free. "LFP" of the internal 2D reel label mentions "Lead Free Process"
2. On customized label, "LFP" or specific symbol can be printed

MARKING

RT0201 / RT0402 / RESISTANCE VALUE IS NOT IN E-24 / E96 SERIES

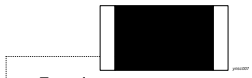

Fig. 4

No marking

RT0603



Fig. 2 Value = 56 kΩ

E-24 series: exception values 10/11/13/15/20/75 of E-24 series, one short bar under marking letter



Fig. 3 Value = 12.4 kΩ

E-96 series: including values 10/11/13/15/20/75 of E-24 series, 3 digits

RT0805 / RT1206 / RT1210 / RT2010 / RT2512



Fig. 1 Value = 10 kΩ

Either resistance in E-24 or E-96: 4 digits
First three digits for significant figure and 4th digit for number of zeros

For further marking information, please see special data sheet "Chip resistors marking".

CONSTRUCTION

The resistors are constructed out of a high-grade ceramic body. Internal metal electrodes are added at each end and connected by a resistive layer. The resistive layer is adjusted to give the approximate required resistance and laser cutting of this resistive layer that achieves tolerance trims the value. The resistive layer is covered with a protective coat and printed with the resistance value. Finally, the two external terminations (matte tin) are added. See fig. 5.

DIMENSION

Table 1 For outlines see fig. 5

TYPE	L (mm)	W (mm)	H (mm)	l_1 (mm)	l_2 (mm)
RT0201	0.60 ±0.03	0.30 ±0.03	0.23 ±0.03	0.10 ±0.05	0.15 ±0.05
RT0402	1.00 ±0.10	0.50 ±0.05	0.30 ±0.05	0.20 ±0.10	0.25 ±0.10
RT0603	1.60 ±0.10	0.80 ±0.10	0.45 ±0.10	0.25 ±0.15	0.25 ±0.15
RT0805	2.00 ±0.10	1.25 ±0.10	0.50 ±0.10	0.35 ±0.20	0.35 ±0.20
RT1206	3.10 ±0.10	1.60 ±0.10	0.55 ±0.10	0.45 ±0.20	0.40 ±0.20
RT1210	3.10 ±0.10	2.60 ±0.15	0.55 ±0.10	0.50 ±0.20	0.50 ±0.20
RT2010	5.00 ±0.10	2.50 ±0.15	0.55 ±0.10	0.60 ±0.20	0.50 ±0.20
RT2512	6.35 ±0.10	3.20 ±0.15	0.55 ±0.10	0.60 ±0.20	0.50 ±0.20

OUTLINES

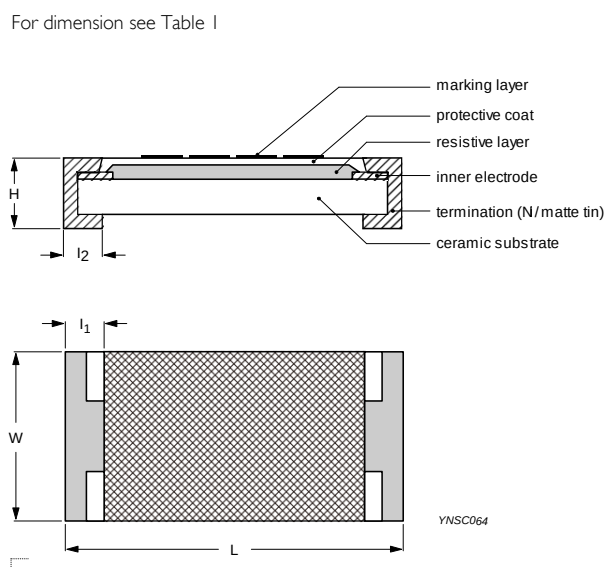

Fig. 5 Chip resistor outlines

ELECTRICAL CHARACTERISTICS

Table 2

TYPE	Operating Temperature Range	Power Rating	Max. Work Vol. (1)	Max. Overload Vol.	Dielectric Withstand Vol.	T.C.R. (ppm/°C)	Resistance Range (E-24/E-96 series)(2) & Tolerance						
							±0.01%	±0.02%	±0.05%	±0.1%	±0.25%	±0.5%	±1.0%
RT0201	–55°C to +125°C	1/20W	25V	50V	50V	±50	---	---	---	22~75K	22~75K	22~75K	22~75K
						±25	---	---	---	22~75K	22~75K	22~75K	22~75K
						±15	---	---	---	22~5K	22~5K	---	---
						±10	---	---	---	22~5K	22~5K	---	---
						±5	---	---	---	---	---	---	---
RT0402		1/16W	50V	100V	75V	±50	50.1~12K	50.1~12K	20~12K	4.7~240K	4.7~240K	4.7~240K	4.7~240K
						±25	50.1~12K	50.1~12K	20~12K	4.7~240K	4.7~240K	4.7~240K	4.7~240K
						±15	20~12K	20~12K	20~12K	20~200K	20~200K	---	---
						±10	20~12K	20~12K	20~12K	20~200K	20~200K	---	---
						±5	20~10K	20~10K	20~10K	20~10K	20~10K	---	---
RT0603		1/10W	75V	150V	100V	±50	50.1~30K	50.1~30K	4.7~100K	1~1M	1~1M	1~1M	1~1M
						±25	50.1~30K	50.1~30K	4.7~100K	1~1M	1~1M	1~1M	1~1M
						±15	50.1~100K	50.1~100K	4.7~100K	4.7~680K	4.7~680K	---	---
						±10	50.1~100K	50.1~100K	4.7~100K	4.7~680K	4.7~680K	---	---
						±5	20~30K	20~30K	20~30K	20~30K	20~30K	---	---
RT0805		1/8W	150V	300V	200V	±50	50.1~30K	50.1~30K	4.7~200K	1~1.5M	1~1.5M	1~1.5M	1~1.5M
						±25	50.1~30K	50.1~30K	4.7~200K	1~1.5M	1~1.5M	1~1.5M	1~1.5M
						±15	50.1~200K	50.1~200K	4.7~200K	4.7~1M	4.7~1M	---	---
						±10	50.1~200K	50.1~200K	4.7~200K	4.7~1M	4.7~1M	---	---
						±5	20~50K	20~50K	20~50K	20~50K	20~50K	---	---
RT1206		1/4W	200V	400V	300V	±50	50.1~30K	50.1~30K	5.6~500K	1~1.5M	1~1.5M	1~1.5M	1~1.5M
						±25	50.1~30K	50.1~30K	5.6~500K	1~1.5M	1~1.5M	1~1.5M	1~1.5M
						±15	50.1~500K	50.1~500K	5.6~500K	5.6~1.5M	5.6~1.5M	---	---
						±10	50.1~500K	50.1~500K	5.6~500K	5.6~1.5M	5.6~1.5M	---	---
						±5	20~100K	20~100K	20~100K	20~100K	20~100K	---	---
RT1210		1/4W	200V	400V	400V	±50	---	---	4.7~1M	4.7~1M	4.7~1M	4.7~1M	4.7~1M
						±25	---	---	4.7~1M	4.7~1M	4.7~1M	4.7~1M	4.7~1M
						±15	---	---	100~100K	4.7~100K	4.7~100K	---	---
						±10	---	---	100~100K	4.7~100K	4.7~100K	---	---
						±5	---	---	---	---	---	---	---
RT2010	–55°C to +125°C	1/2W	200V	400V	400V	±50	---	---	4.7~1M	4.7~1M	4.7~1M	4.7~1M	4.7~1M
						±25	---	---	4.7~1M	4.7~1M	4.7~1M	4.7~1M	4.7~1M
						±15	---	---	100~100K	4.7~100K	4.7~100K	---	---
						±10	---	---	100~100K	4.7~100K	4.7~100K	---	---
						±5	---	---	---	---	---	---	---
RT2512		3/4W	200V	400V	400V	±50	---	---	4.7~1M	4.7~1M	4.7~1M	4.7~1M	4.7~1M
						±25	---	---	4.7~1M	4.7~1M	4.7~1M	4.7~1M	4.7~1M
						±15	---	---	100~100K	4.7~100K	4.7~100K	---	---
						±10	---	---	100~100K	4.7~100K	4.7~100K	---	---
						±5	---	---	---	---	---	---	---
		1W	200V	400V	400V	±50	---	---	10Ω~1M	10Ω~1M	10Ω~1M	10Ω~1M	10Ω~1M
						±25	---	---	10Ω~1M	10Ω~1M	10Ω~1M	10Ω~1M	10Ω~1M

NOTE

1. The maximum working voltage that may be continuously applied to the resistor element, see "IEC publication 60115-8"
2. Value of E-192 series is on request

FOOTPRINT AND SOLDERING PROFILES

For recommended footprint and soldering profiles, please see the special data sheet "Chip resistors mounting".

PACKING STYLE AND PACKAGING QUANTITY

Table 3 Packing style and packaging quantity

PACKING STYLE	REEL DIMENSION	RT0201	RT0402	RT0603	RT0805	RT1206	RT1210	RT2010	RT2512
Paper/PE taping reel (R)	7" (178 mm)	10,000	10,000	5,000	5,000	5,000	5,000	---	---
	10" (254 mm)	20,000	20,000	10,000	10,000	10,000	10,000	---	---
	13" (330 mm)	50,000	50,000	20,000	20,000	20,000	20,000	---	---
Embossed taping reel (K)	7" (178 mm)	---	---	---	---	---	---	4,000	4,000

NOTE

1. For Paper/Embossed tape and reel specification/dimensions, please see the special data sheet "Chip resistors packing"

FUNCTIONAL DESCRIPTION

POWER RATING

Each type rated power at 70°C:
RT0201=1/20W, RT0402=1/16W, RT0603=1/10W, RT0805=1/8W, RT1206=1/4W, RT1210=1/4W, RT2010=1/2W, RT2512=3/4W, 1W

RATED VOLTAGE

The DC or AC (rms) continuous working voltage corresponding to the rated power is determined by the following formula:

$V = \sqrt{(P \times R)}$

or max. working voltage whichever is less

Where

V=Continuous rated DC or AC (rms) working voltage (V)

P=Rated power (W)

R=Resistance value (Ω)

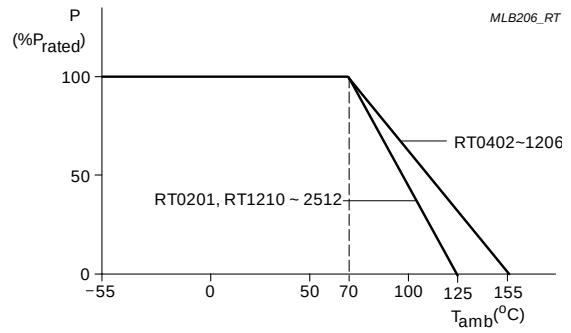

Fig. 6 Maximum dissipation (P) in percentage of rated power as a function of the operating ambient temperature (T_{amb})

TESTS AND REQUIREMENTS

Table 4 Test condition, procedure and requirements

TEST	TEST METHOD	PROCEDURE	REQUIREMENTS
Temperature Coefficient of Resistance (T.C.R.)	MIL-STD-202 Method 304	At +25/–55 °C and +25/+125 °C **Formula:** $T.C.R= \frac{R_2-R_1}{R_1(t_2-t_1)} \times 10^6$ (ppm/°C) Where t_1=+25 °C or specified room temperature t_2=–55 °C or +125 °C test temperature R_1=resistance at reference temperature in ohms R_2=resistance at test temperature in ohms	Refer to table 2
Life/Endurance	IEC 60115-1 4.25.1 MIL-STD-202 Method 108A	At 70±5 °C for 1,000 hours, RCWV applied for 1.5 hours on, 0.5 hour off, still air required	±(0.5%+0.05 Ω)
High Temperature Exposure	IEC 60068-2-2	1000 hours at maximum operating temperature depending on specification, unpowered	±(0.5%+0.05 Ω)
Moisture Resistance	MIL-STD-202 Method 106G	Each temperature / humidity cycle is defined at 8 hours, 3 cycles / 24 hours for 10d. with 25 °C / 65 °C 95% R.H, without steps 7a & 7b, unpowered Parts mounted on test-boards, without condensation on parts Measurement at 24±2 hours after test conclusion	±(0.5%+0.05 Ω)
Thermal Shock	MIL-STD-202 Method 107G	-55/+125 °C Number of cycles required is 300. Devices mounted Maximum transfer time is 20 seconds. Dwell time is 15 minutes. Air – Air	±(0.5%+0.05 Ω) for 10 KΩ to 10 MΩ ±(0.5%+0.05 Ω) for others
Humidity (steady state)	IEC 60115-1 4.24.2	Steady state for 1000 hours at 40 °C / 95% R.H. RCWV applied for 1.5 hours on and 0.5 hour off	±(0.5%+0.05 Ω)

TEST	TEST METHOD	PROCEDURE	REQUIREMENTS
Short Time Overload	IEC60115-1 4.13	2.5 times of rated voltage or maximum overload voltage whichever is less for 5 sec at room temperature	±(0.5%+0.05 Ω) No visible damage
Board Flex/ Bending	IEC 60115-1 4.33	Chips mounted on a 90mm glass epoxy resin PCB (FR4) Bending: see table 6 for each size Bending time: 60±5 seconds	±(0.25%+0.05 Ω) No visible damage
Insulation Resistance	IEC 60115-1 4.6	Rated continuous overload voltage (RCOV) for 1 minute Details see below table 5	≥10 GΩ
Dielectric Withstand Voltage	IEC 60115-1 4.7	Maximum voltage (V_{rms}) applied for 1 minute	No breakdown or flashover
Solderability - Wetting	J-STD-002 test B	Electrical Test not required Magnification 50X SMD conditions: 1st step: method B, aging 4 hours at 155°C dry heat 2nd step: leadfree solder bath at 245±3°C Dipping time: 3±0.5 seconds	Well tinned (≥95% covered) No visible damage
- Leaching	J-STD-002 test D	Leadfree solder, 260 °C, 30 seconds immersion time	No visible damage
- Resistance to Soldering Heat	IEC 60115-1 4.18	Condition B, no pre-heat of samples. Leadfree solder, 260 °C, 10 seconds immersion time Procedure 2 for SMD: devices fluxed and cleaned with isopropanol	±(0.5%+0.05 Ω) No visible damage

Table 5 Criteria of rated continued working voltage and overload voltage

TYPE	RT0201	RT0402	RT0603	RT0805	RT1206	RT1210	RT2010	RT2512
Voltage (DC/unit: V); (AC/ unit: V_{rms})	50	100	100	300	500	500	500	500

Table 6 Bending for sizes 0201 to 2512

TYPE	RT0201	RT0402	RT0603	RT0805	RT1206	RT1210	RT2010	RT2512
Specification (mm)	5	5	3	3	2	2	2	2

REVISION HISTORY

REVISION	DATE	CHANGE NOTIFICATION	DESCRIPTION
Version 12	Apr. 21, 2020	-	- Modified resistance range
Version 11	July 2, 2019	-	- Add 1W for 2512
Version 10	Jun. 12, 2019	-	- Extend resistor value
Version 9	Sep. 12, 2017	-	- Add ±0.02% tol. for 0402 to 1206
Version 8	May 31, 2017	-	- Add 10" packing
Version 7	Jan. 17, 2017	-	- Add ±0.01% tol. for 0402 to 1206
Version 6	May. 11, 2015	-	- Extend resistor value
Version 5	Aug. 22, 2014	-	- Add RT0201 - RT0402/0603/0805/1206: resistance range and operating temperature range updated - Fig. 6 updated
Version 4	Oct 21, 2009	-	- Test Items and methods updated - Test requirements upgraded
Version 3	Jul 11, 2008	-	- Change to dual brand datasheet that describe RT0402 to RT2512 with RoHS compliant - Description of "Halogen Free Epoxy" added - Define global part number - Modify electrical characteristic
Version 2	Dec 26, 2005	-	- New datasheet for thin film high precision - high stability chip resistors sizes of 0201/0402/0603/0805/1206/1210/2010/2512, 1%, 0.5%, 0.25%, 0.1%, 0.05%, TC25/50 with lead-free terminations - Replace the 0402 to 1210 parts of pdf files: TFx10_1_1, TFx11_.5_2, TFx12_.25_2, TFx13_.1_3, TFx14_.05_1, TFx20_1_2, TFx21_.5_2, TFx22_.25_2, TFx23_.1_2, TFx24_.05_1, and combine into a document. - Test method and procedure updated - PE tape added (paper tape will be replaced by PE tape)

" Yageo reserves all the rights for revising the content of this datasheet without further notification, as long as the products itself are unchanged. Any product change will be announced by PCN."