MEAN WELL

1500W Single Output Power Supply — RSP-1500 series



Features :

- Universal AC input/Full range
- ZVS new technology
- AC input active surge current limiting
- High efficiency up to 91%
- Built-in active PFC function,PF>0.95
- Protections: Short circuit / Overload / Over voltage / Over temperature
- Forced air cooling by built-in DC ball bearing fan
- Output voltage can be trimmed between 70~100% of the rated output voltage
- High power density 8.3W/inch^3
- Current sharing up to 6000W(3+1)
- Alarm signal output
- Built-in 12V/0.1A auxiliary output for remote control
- Built-in remote ON-OFF control
- Built-in remote sense function
- 3 years warranty

SPECIFICATION

MODEL		RSP-1500-5	RSP-1500-12	RSP-1500-15	RSP-1500-24	RSP-1500-27	RSP-1500-48
OUTPUT	DC VOLTAGE	5V	12V	15V	24V	27V	48V
	RATED CURRENT	240A	125A	100A	63A	56A	32A
	CURRENT RANGE	0 ~ 240A	0 ~ 125A	0 ~ 100A	0 ~ 63A	0 ~ 56A	0 ~ 32A
	RATED POWER	1200W	1500W	1500W	1512W	1512W	1536W
	RIPPLE & NOISE (max.) Note.2	150mVp-p	150mVp-p	150mVp-p	150mVp-p	150mVp-p	200mVp-p
	VOLTAGE ADJ. RANGE	4.5 ~ 5.5V	10 ~ 13.5V	13.5 ~ 16.5V	20 ~ 26.4V	24 ~ 30V	43 ~ 56V
	VOLTAGE TOLERANCE Note.3	±2.0%	±1.0%	±1.0%	±1.0%	±1.0%	±1.0%
	LINE REGULATION	±0.5%	±0.5%	±0.5%	±0.5%	±0.5%	±0.5%
	LOAD REGULATION	±2.0%	±0.5%	±0.5%	±0.5%	±0.5%	±0.5%
	SETUP, RISE TIME	1500ms, 100ms at full load					
	HOLD UP TIME (Typ.)	10ms at full load		14ms at full load		16ms at full load	
INPUT	VOLTAGE RANGE	90 ~ 264VAC 127 ~ 370VDC					
	FREQUENCY RANGE	47~63Hz					
	POWER FACTOR (Typ.)	0.95/230VAC 0.98/115VAC at full load					
	EFFICIENCY (Typ.)	80%	87%	87%	90%	90%	91%
	AC CURRENT (Typ.)	17A/115VAC 8A/230VAC					
	INRUSH CURRENT (Typ.)	30A/115VAC 60A/230VAC					
	LEAKAGE CURRENT	<2.0mA / 240VAC					
PROTECTION	OVERLOAD Note.5	105 ~135% rated output power					
		Protection type : Constant current limiting unit will shut down o/p voltage after 5sec. Re-power on to recover					
	OVER VOLTAGE	5.75 ~ 6.75V	13.8 ~ 16.8V	17 ~ 20.5V	27.6 ~ 32.4V	31 ~ 36.5V	57.6 ~ 67.2V
		Protection type : Shut down o/p voltage, re-power on to recover					
	OVER TEMPERATURE	95℃±5℃ (TSW2) detect on heatsink of power transistor					
		Protection type : Shut down o/p voltage, recovers automatically after temperature goes down					
FUNCTION	AUXILIARY POWER(AUX)	12V@0.1A(Only for Remote ON/OFF control)					
	REMOTE ON/OFF CONTROL	Please see the Function Manual					
	ALARM SIGNAL OUTPUT	Please see the Function Manual					
	OUTPUT VOLTAGE TRIM	Please see the Function Manual					
	CURRENT SHARING	Please see the Function Manual					
ENVIRONMENT	WORKING TEMP.	-20 ~ +70℃ (Refer to output load derating curve)					
	WORKING HUMIDITY	20~90% RH non-condensing					
	STORAGE TEMP., HUMIDITY	-40 ~ +85℃, 10 ~ 95% RH					
	TEMP. COEFFICIENT	±0.05%/℃ (0 ~ 50℃)					
	VIBRATION	10 ~ 500Hz, 2G 10min./1cycle, 60min. each along X, Y, Z axes					
SAFETY & EMC (Note 4)	SAFETY STANDARDS	UL60950-1, TUV EN60950-1 approved					
	WITHSTAND VOLTAGE	I/P-O/P:3KVAC I/P-FG:1.5KVAC O/P-FG:0.5KVAC					
	ISOLATION RESISTANCE	I/P-O/P, I/P-FG, O/P-FG:100M Ohms/500VDC					
	EMI CONDUCTION & RADIATION	Compliance to EN55022 (CISPR22)					
	HARMONIC CURRENT	Compliance to EN61000-3-2,-3					
	EMS IMMUNITY	Compliance to EN61000-4-2,3,4,5,6,8,11; ENV50204, EN55024, light industry level, criteria A					
OTHERS	MTBF	62.6K hrs min. MIL-HDBK-217F (25℃)					
	DIMENSION	278*127*83.5mm (L*W*H)					
	PACKING	2.6Kg; 6pcs/16.6Kg/1.54CUFT					
NOTE	1. All parameters NOT specially mentioned are measured at 230VAC input, rated load and 25℃ of ambient temperature. 2. Ripple & noise are measured at 20MHz of bandwidth by using a 12" twisted pair-wire terminated with a 0.1uf & 47uf parallel capacitor. 3. Tolerance : includes set up tolerance, line regulation and load regulation. 4. The power supply is considered a component which will be installed into a final equipment. The final equipment must be re-confirmed that it still meets EMC directives. 5. Derating may be needed under low input voltages. Please check the derating curve for more details.						

Mechanical Specification

Case No.943A Unit:mm

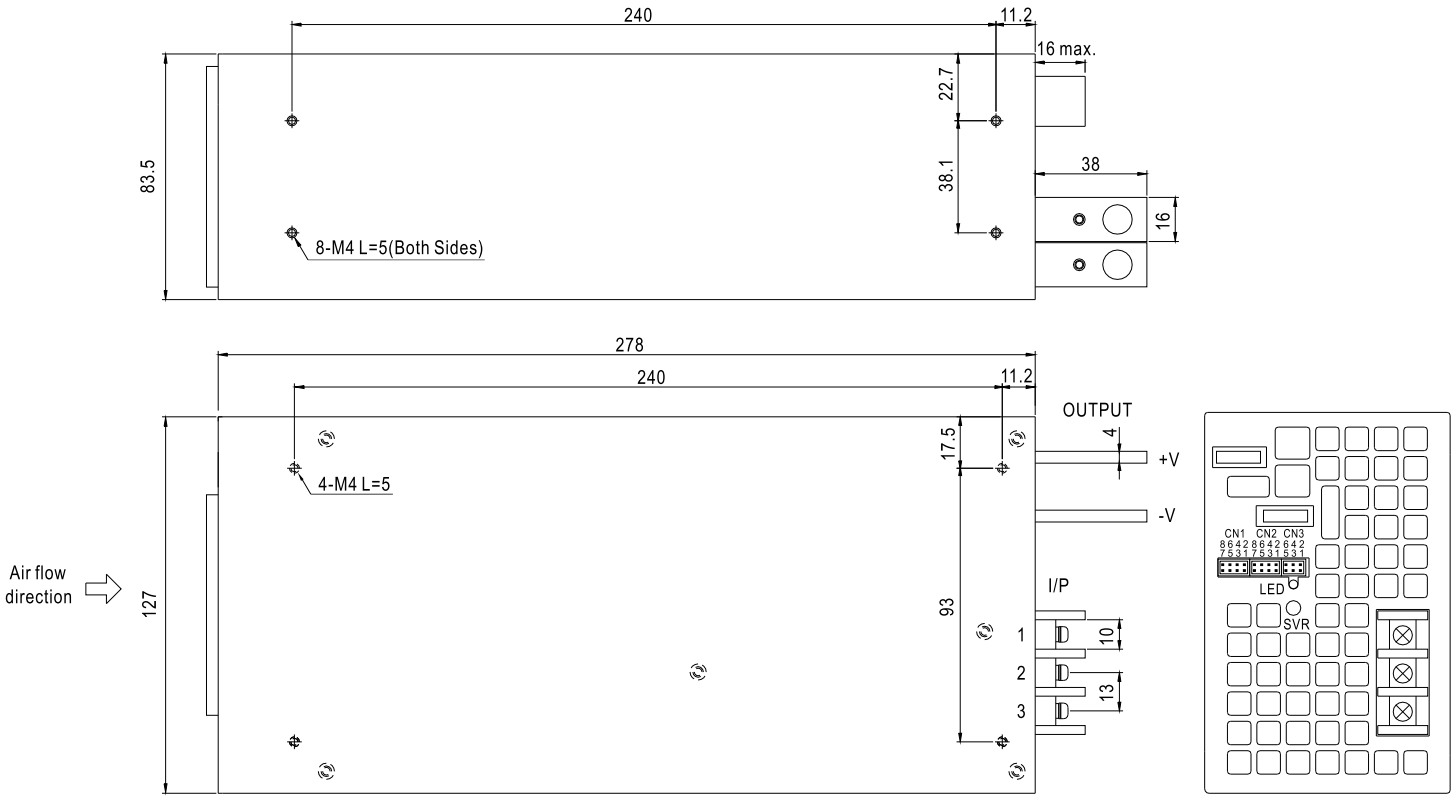

AC Input Terminal Pin No. Assignment

Pin No.	Assignment
1	FG ⏚
2	AC/N
3	AC/L

Control Pin No. Assignment(CN1,CN2) : HRS DF11-8DP-2DS or equivalent

Pin No.	Assignment	Pin No.	Assignment	Mating Housing	Terminal
1	RCG	4	TRIM	HRS DF11-8DS or equivalent	HRS DF11-**SC or equivalent
2	RC2	6	LS(Current Share)		
3,5,7	-S	8	+S		

RCG: Remote ON/OFF Ground
RC2: Remote ON/OFF
-S : -Remote Sensing

TRIM: Adjustment of Output Voltage
LS: Load Share
+S: +Remote Sensing

Control Pin No. Assignment(CN3) : HRS DF11-6DP-2DS or equivalent

Pin No.	Assignment	Pin No.	Assignment	Mating Housing	Terminal
1	P OK GND	4	AUXG	HRS DF11-6DS or equivalent	HRS DF11-**SC or equivalent
2	P OK	5	RC1		
3	RCG	6	AUX		

P OK GND: Power OK Ground
P OK: Power OK Signal
RCG: Remote ON/OFF Ground

AUXG: Auxiliary Ground
RC1: Remote ON/OFF
AUX: Auxiliary Output

Block Diagram

PFC fosc : 70KHz
PWM fosc : 100KHz

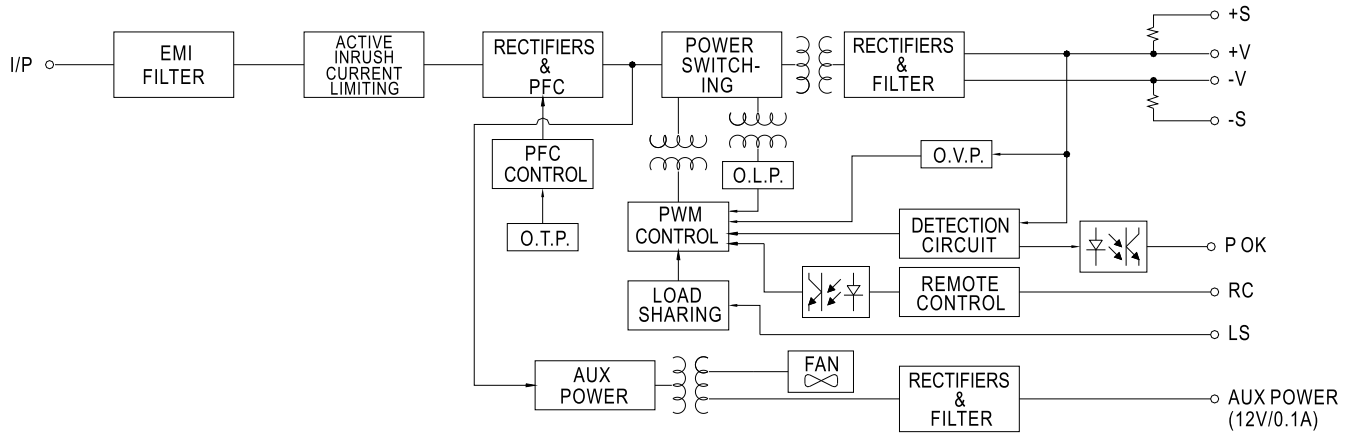

Derating Curve

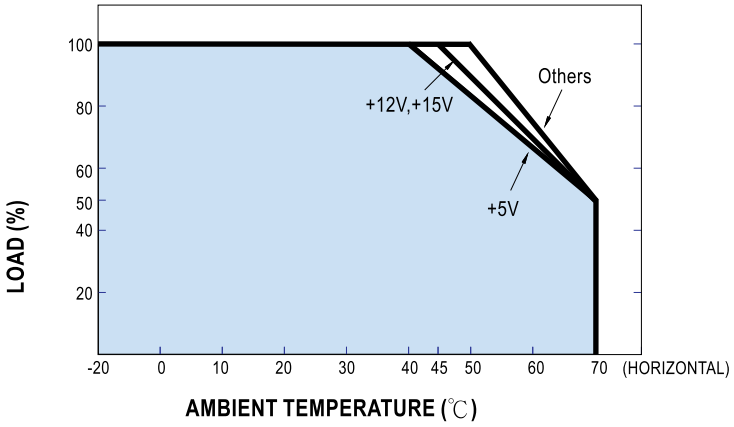

Static Characteristics

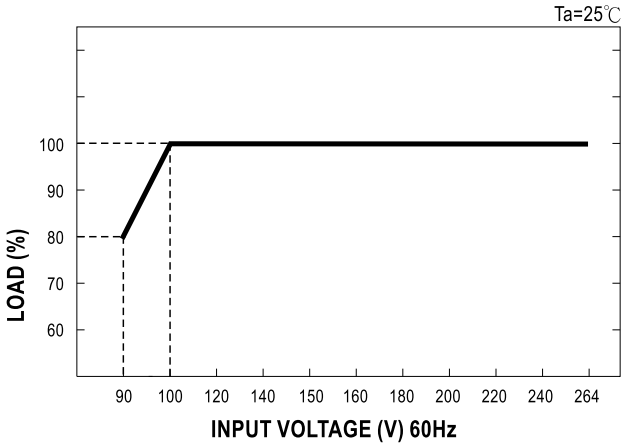

Function Manual

1.Remote ON/OFF

(1)Remote ON/OFF control becomes available by applying voltage in CN1 & CN2 & CN3

(2)Table 1.1 shows the specification of Remote ON/OFF function

(3)Fig.1.2 shows the example to connect Remote ON/OFF control function

Table 1.1 Specification of Remote ON/OFF

Connection Method		Fig. 1.2(A)	Fig. 1.2(B)	Fig. 1.2(C)
SW Logic	Output on	SW Open	SW Open	SW Close
	Output off	SW Close	SW Close	SW Open

Fig.1.2 Examples of connecting remote ON/OFF

(A)Using external voltage source

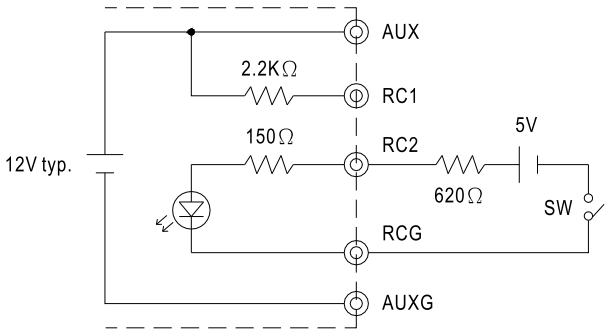

(B)Using internal 12V auxiliary output

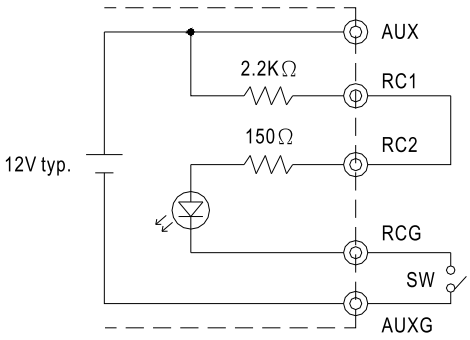

(C)Using internal 12V auxiliary output

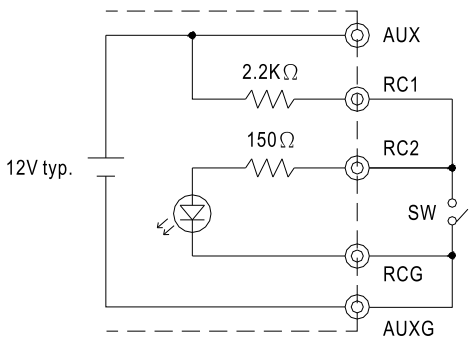

2.Alarm Signal Output

(1)Alarm signal is sent out through "P OK" & "P OK GND" pins
(2)An external voltage source is required for this function. The maximum applied voltage is 50V and the maximum sink current is 10mA
(3)Table 2.1 explain the alarm function built-in the power supply

Function	Description	Output of alarm(P OK)
P OK	The signal is "Low" when the power supply is above 65% of the rated output voltage-Power OK	Low (0.5V max at 10mA)
	The signal turns to be "High" when the power supply is under 65% of the rated output voltage-Power Fail	High or open (External applied voltage 10mA max.)

Table 2.1 Explanation of alarm

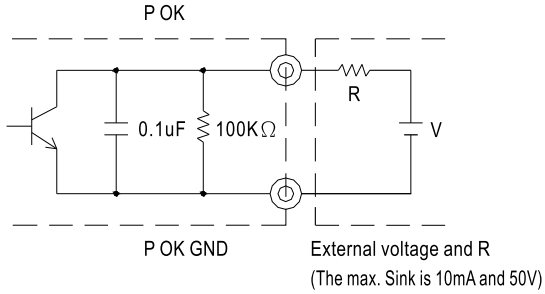

Fig. 2.2 Internal circuit of P OK (Open collector method)

3.Output Voltage TRIM

(1)Adjustment of output voltage is possible between 70~100%(Typ.) of the rated output which is shown in Fig. 3.1
(2)Connecting a resistor externally between TRIM and-S on CN1 or CN2 that is shown in Fig. 3.2.

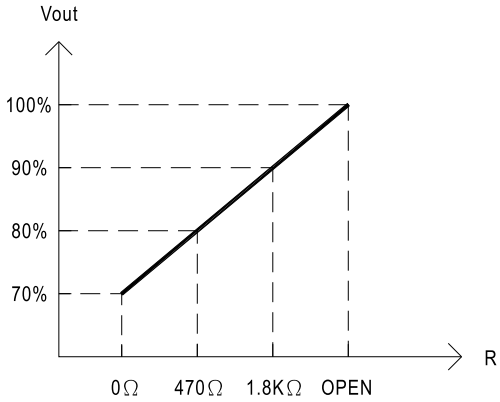

Fig. 3.1 External Resistor (Typical)

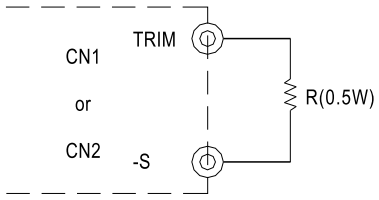

Fig. 3.2 Output voltage trimming

4.Current Sharing

(1)Parallel operation is available by connecting the units shown as below (+S,-S and LS are connected mutually in parallel):
(2)The voltage difference among each output should be minimized that less than ±2% is required
(3)The total output current must not exceed the value determined by the following equation (Output current at parallel operation)=(The rated current per unit) x (Number of unit) x 0.9
(4) In parallel operation 4 units is the maximum, please consult the manufacture for other applications
(5) When remote sensing is used in parallel operation, the sensing wire must be connected only to the master unit

