Rev	AWO #	Description	Date	Appr
-		RELEASED	8/02/10	

APPROVED: _____

DATE: _____ TITLE: _____

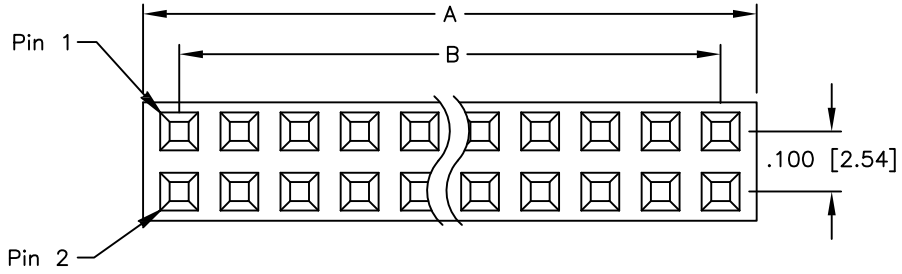

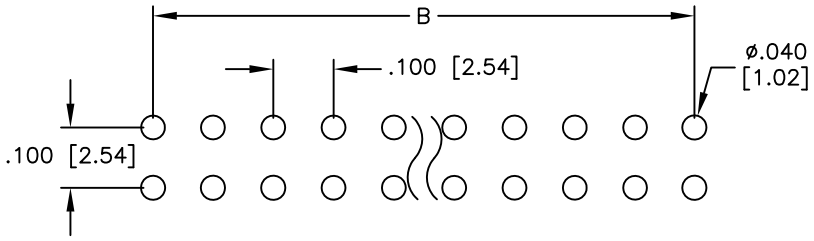

RECOMMENDED PCB LAYOUT

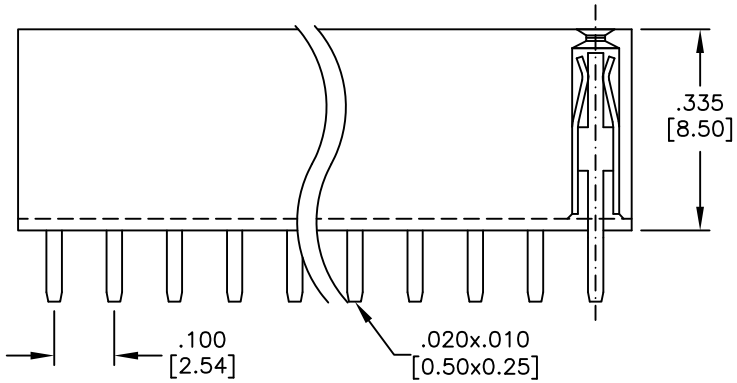

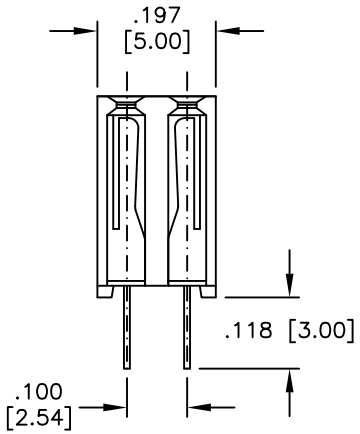

SPECIFICATIONS:
Material:
Insulator: PBT, glass reinforced, rated UL 94V-0
Insulator color: Black
Contacts: Phosphor Bronze
Plating:
Tin over Copper Underplate overall.
Electrical:
Current rating: 3 Amps max.
Contact resistance: 20 mohms max. initial
Insulation resistance: 5,000 Mohms min.
Dielectric withstanding voltage: 500 VAC for 1 minute
Temperature Rating:
Operating temperature: -40°C to +105°C
Environmental:
Lead free, RoHS compliant
Recommended soldering temp: 235°C for 5 seconds

RoHS COMPLIANT

Positions: 04 thru 80
A = .100 [2.54] x No. of Positions per Row
B = .100 [2.54] x No. of Spaces

UNLESS OTHERWISE SPECIFIED
ALL DIMENSIONS ARE INCHES [MM]
TOLERANCES: EXCEPT AS NOTED

INCHES		HOLES	
.X	± .10	Ø.X	±.10
.XX	± .020	Ø.XX	±.015
.XXX	± .015	Ø.XXX	±.010

APPROVALS		DATE
DRAWN	DY	8/02/10
CHECKED		
APPROVED		

ADAM TECH
909 Rahway Avenue, Union, NJ 07083
Phone: 908-687-5000 Fax: 908-687-5710

TITLE
.100 x .100 DUAL ROW RECEPTACLE STRIP
.335 [8.50] HEIGHT

SIZE	PART NO.	REV.
X	RS2T-XX-T	-

REF: S00059T | SCALE: NTS | SHEET 1 OF 1